ADRIAN STEEL
Cargo Management Solutions for Commercial Vehicles

TSBX KIT WITHOUT GUARD, GM2500 & 3500 8' M

PRODUCT WEIGHT

314.93 LBS

WIDTH X DEPTH X HEIGHT

75.75" X 97" X 23"

CAPACITY

100 LBS PER BOX

COLOR

WHITE

CATALOG NUMBER

TSBX-8G2M-NG

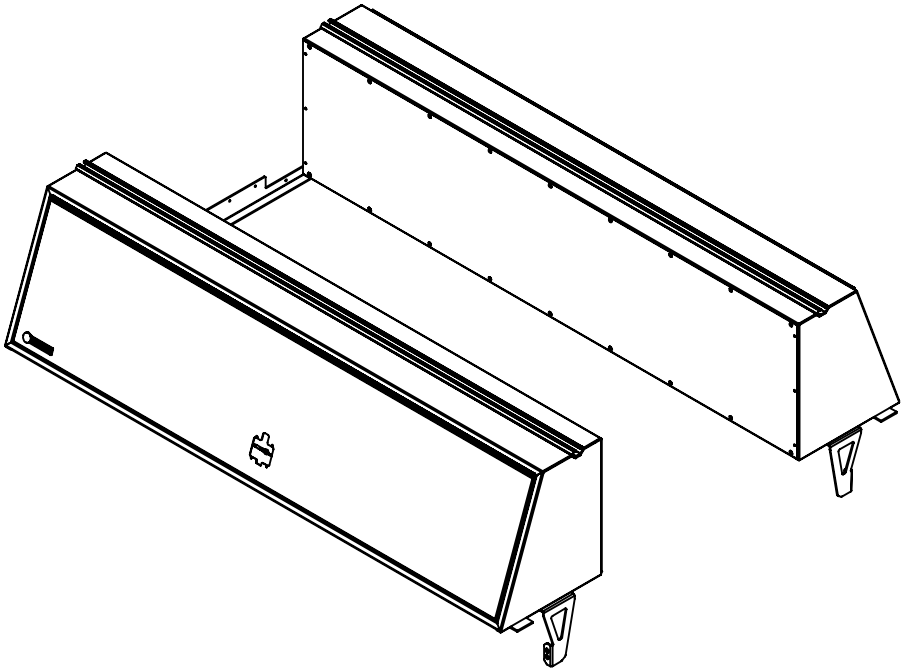

PRODUCT FEATURES

With 17.8 cubic feet per box of enclosed space provides significantly more room than standard crossover or low-profile toolboxes. Easily store tools, gear, and equipment. The toolboxes sit on the bed rails, preserving the full length and depth of the truck bed while maintaining usable floor space for large items. The enclosed design keeps everything dry, and protected from weather, dust, and road debris. The toolboxes are theft resistant but easy to access, reducing time spent digging through the bed or climbing in and out. An adjustable shelf and divider can be added for additional organization.

SEE PAGE 2 FOR APPLICATION NOTES, ACCESSORIES AND OTHER PRODUCTS THAT WORK WITH THIS UNIT.

TSBX KIT WITHOUT GUARD, GM2500 & 3500 8' M

CATALOG NUMBER **TSBX-8G2M-NG**

PRODUCT APPLICATION

With 17.8 cubic feet per box of enclosed space provides significantly more room than standard crossover or low-profile toolboxes. Easily store full-size tools, jobsite gear, compressors, power tools, and recovery equipment. Sitting on the bed rails, preserving the full length and depth of the truck bed. Maintains usable floor space for larger cargo like lumber, pallets, or equipment. Completely enclosed design keeps tools secure, dry, and protected from weather, dust, and road debris. This product comes equipped with a mechanical lock.

ACCESSORIES THAT WILL WORK WITH THIS PRODUCT

CATALOG NUMBER	*DESCRIPTION (smart)*
TSA-S8D4	TOP SIDE BOX, 8' SHLV KIT
TSBX-DK4	TOP SIDE BOX, DIVD KIT

The information contained in this document is the sole property of ADRIAN STEEL COMPANY. ADRIAN STEEL COMPANY retains the right to modify and/or change the product of its design at any time with prior notification.

INSTR. NUMBER : 80397	PG: 1	REV: C
PART NUMBER : TSBX-8F1E		
PART DESC. • TOPSIDER KIT, F-150, 8' • BOX, E-LOCK		

NOTE:
REFER TO 83171 INSTALL INSTRUCTION FOR KITS WITHOUT CAB GUARD

ITEM NO.	PART NUMBER	DESCRIPTION	QTY.
1	TS-BOX8	TOP SIDE BOX, 8' ASSEMBLY	2
2	TS-BKF2	TSB FORD 8' BED BRKT KIT	1
3	TS-CG1	TSBX, CAB GUARD KIT, 1	1
4	81244	KIT,TOPSIDER,8FT,ELOCK W/LIGHTING	1
5	81248	KIT, TAILGATE CHMSL	1

NOTE:
BOM IS FOR BOTH TSBX-8F1E AND TSBX-8F2E

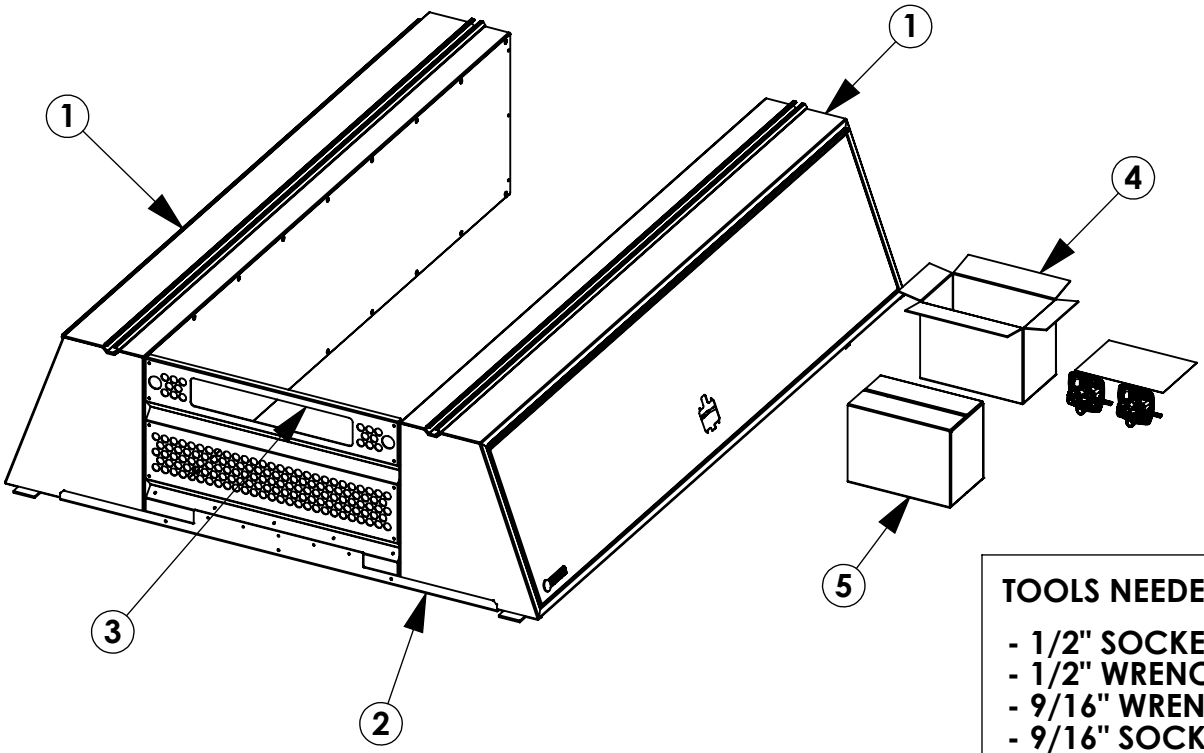

TOOLS NEEDED:

- 1/2" SOCKET
- 1/2" WRENCH
- 9/16" WRENCH
- 9/16" SOCKET
- 1/2" DRILL BIT
- 3/8" DRILL BIT
- STEP BIT
- DRILL
- RIVET GUN

INSTR. NUMBER : 80397	PG: 2	REV: C
PART NUMBER : TSBX-8F1M		
PART DESC. • TOPSIDER KIT, F-150, 8' • BOX		

ITEM NO.	PART NUMBER	DESCRIPTION	QTY.
1	TS-BOX8	TOP SIDE BOX, 8' ASSEMBLY	2
2	TS-BKF2	TSB FORD 8' BED BRKT KIT	1
3	TS-CG1	TSBX, CAB GUARD KIT, 1	1
4	TMLHK2	TOPPER MECHANICAL LOCK HATCH KIT	1
5	81248	KIT, TAILGATE CHMSL	1

NOTE:
BOM IS FOR BOTH TSBX-8F1M AND TSBX-8F2M

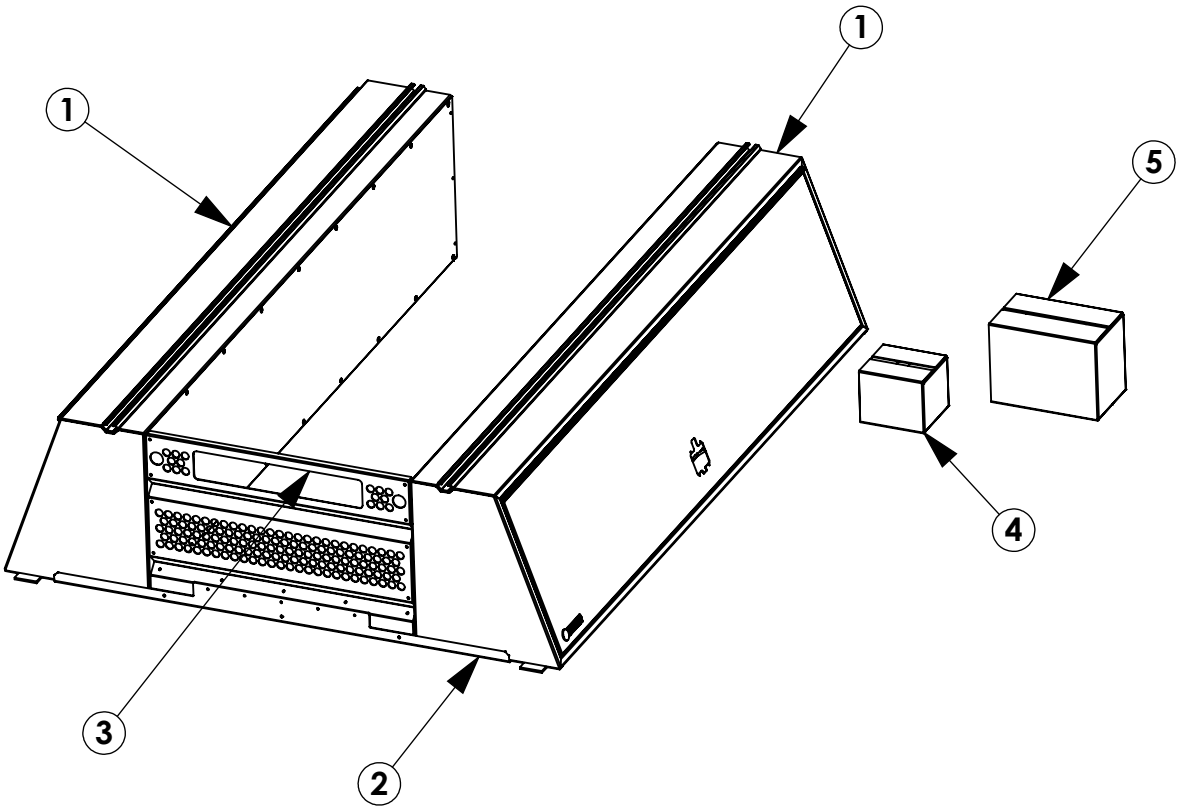

INSTR. NUMBER : 80397	PG: 3	REV: C
PART NUMBER : TSBX-8G1E		
PART DESC. • TSBX KIT,GM 1500, 8' BOX, • E-LOCK		

ITEM NO.	PART NUMBER	DESCRIPTION	QTY.
1	TS-BOX8	TOP SIDE BOX, 8' ASSEMBLY	2
2	TS-BKG2	TSBX, GM 8' BED BRKT KIT	1
3	TS-CG3	TSBX, CAB GUARD KIT, 3	1
4	81244	KIT,TOPSIDER,8FT,ELOCK W/LIGHTING	1
5	81248	KIT, TAILGATE CHMSL	1

NOTE:
BOM IS FOR BOTH TSBX-8G1E AND TSBX-8G2E

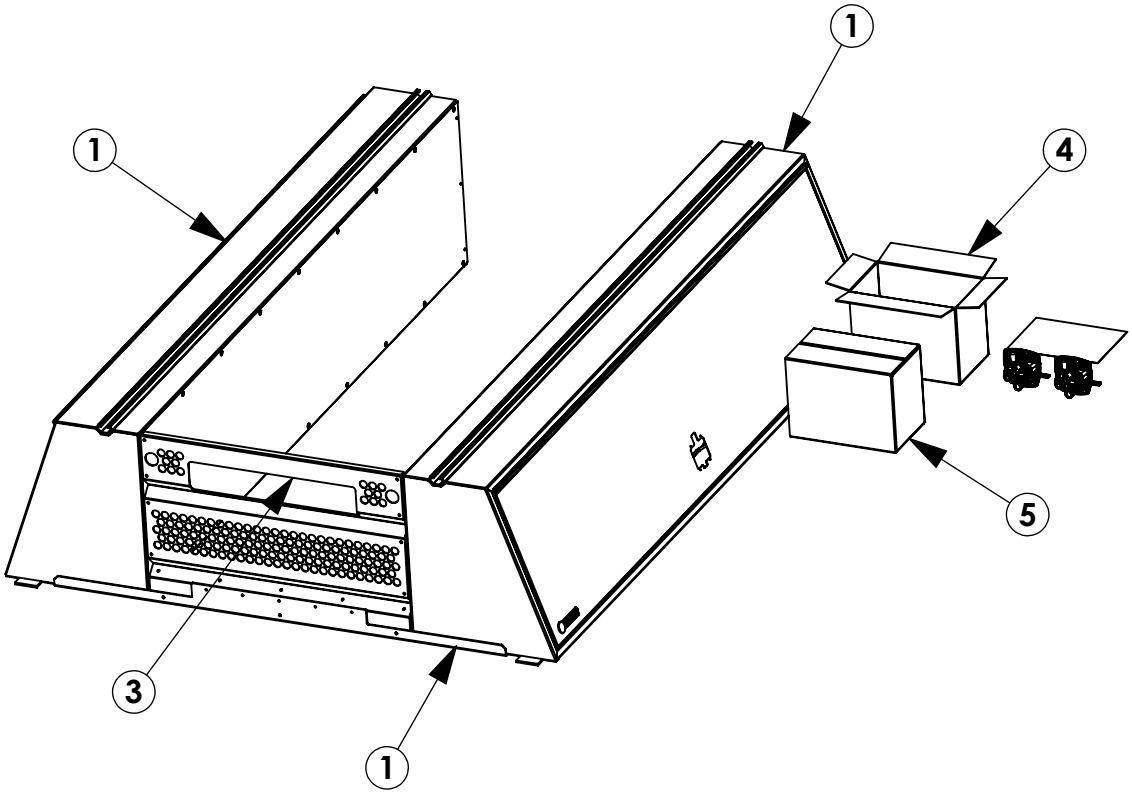

INSTR. NUMBER : 80397	PG: 4	REV: C
PART NUMBER : TSBX-8G1M		
PART DESC. : TSBX KIT,GM 1500, 8' BOX		

ITEM NO.	PART NUMBER	DESCRIPTION	QTY.
1	TS-BOX8	TOP SIDE BOX, 8' ASSEMBLY	2
2	TS-BKG2	TSBX, GM 8' BED BRKT KIT	1
3	TS-CG3	TSBX, CAB GUARD KIT, 3	1
4	TMLHK2	TOPPER MECHANICAL LOCK HATCH KIT	1
5	81248	KIT, TAILGATE CHMSL	1

NOTE:
BOM IS FOR BOTH TSBX-8G1M AND TSBX-8G2M

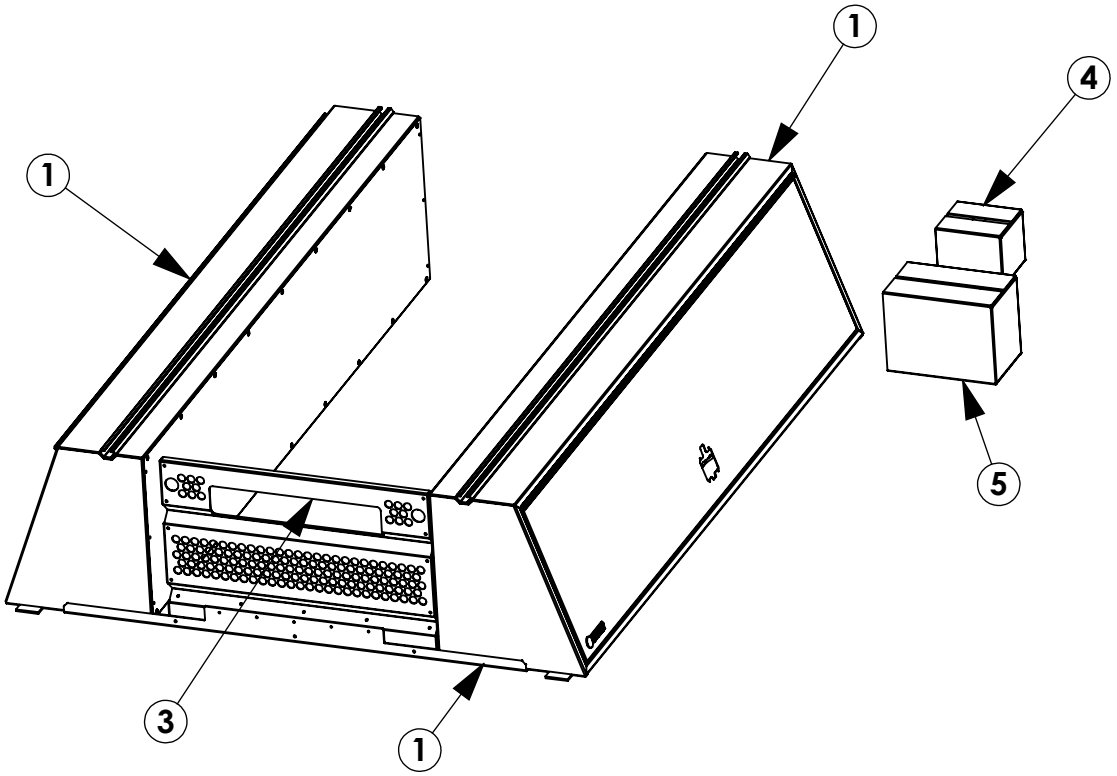

INSTR. NUMBER : 80397	PG: 5	REV: C
PART NUMBER : TSBX-8R1E		
PART DESC. • TOPSIDER KIT,RAM 1500, 8' • BOX, E-LOCK		

ITEM NO.	PART NUMBER	DESCRIPTION	QTY.
1	TS-BOX8	TOP SIDE BOX, 8' ASSEMBLY	2
2	TS-BKR2	TSBX, RAM 8' BED BRKT KIT	1
3	TS-CG3	TSBX, CAB GUARD KIT, 3	1
4	81244	KIT,TOPSIDER,8FT,ELOCK W/LIGHTING	1
5	81248	KIT, TAILGATE CHMSL	1

NOTE:
BOM IS FOR BOTH TSBX-8R1E AND TSBX-8R2E

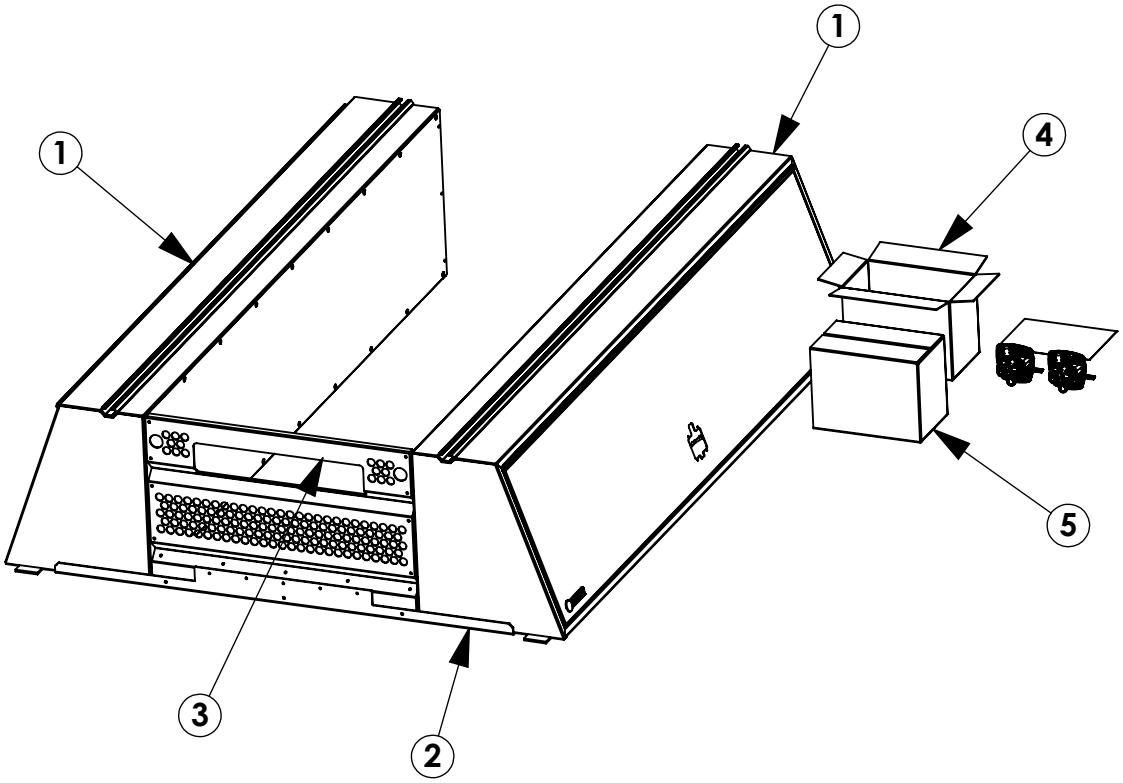

INSTR. NUMBER : 80397	PG: 6	REV: C
PART NUMBER : TSBX-8R1M		
PART DESC. • TOPSIDER KIT,RAM 1500, 8' • BOX		

ITEM NO.	PART NUMBER	DESCRIPTION	QTY.
1	TS-BOX8	TOP SIDE BOX, 8' ASSEMBLY	2
2	TS-BKR2	TSBX, RAM 8' BED BRKT KIT	1
3	TS-CG3	TSBX, CAB GUARD KIT, 3	1
4	TMLHK2	TOPPER MECHANICAL LOCK HATCH KIT	1
5	81248	KIT, TAILGATE CHMSL	1

NOTE:
BOM IS FOR BOTH TSBX-8R1M AND TSBX-8R2M

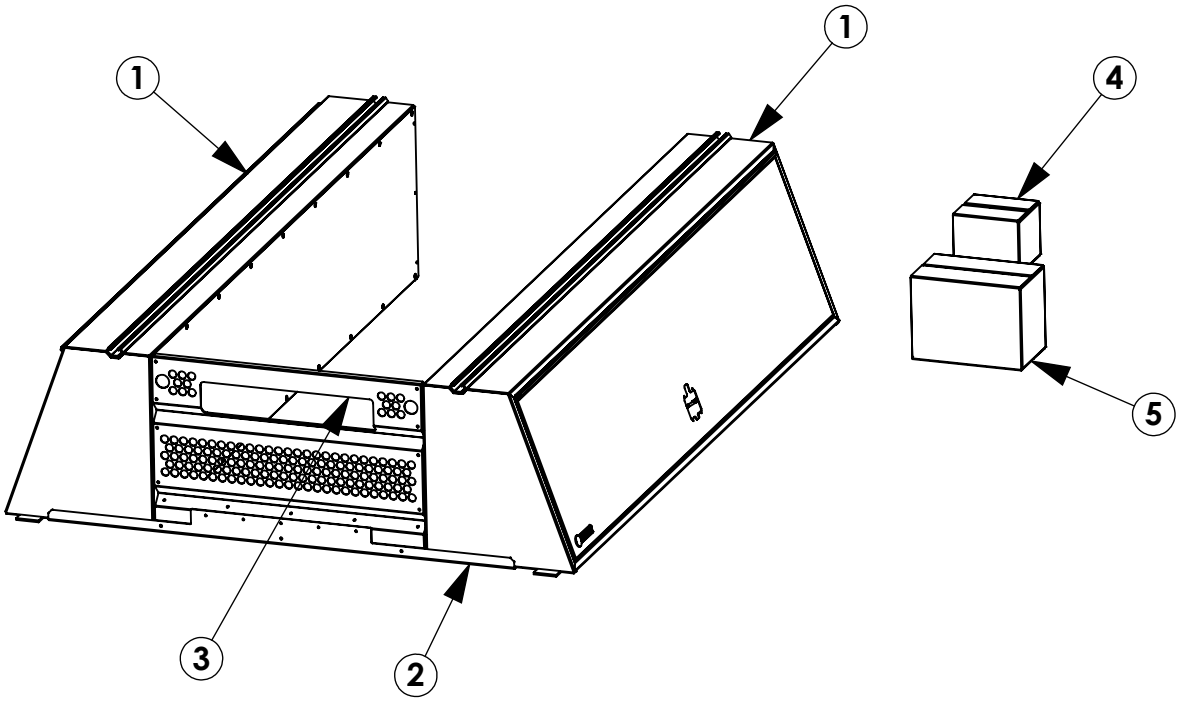

BEST PRACTICES

GET TO KNOW THE VEHICLE - AT THE BEGINNING OF ANY INSTALLATION, CHECK THE LOCATION OF THE FUEL TANK, FUEL LINES, BRAKE LINES, HIGH VOLTAGE BATTERIES AND WIRING HARNESSES TO AVOID INJURY OR PROPERTY DAMAGE FROM TOOL CONTACT.

SEAL ALL EXTERIOR HOLES - ALL INSTALLATION HOLES SHOULD BE SEALED WITH BUTYL TAPE OR SILICON TO PREVENT WATER AND EXHAUST GASES FROM ENTERING THE VEHICLE.

CONTROL DRILL DEPTH - TO AVOID DAMAGE TO THE VEHICLE, USE A DRILL STOP OR CLEARED STEP BIT WHEN DRILLING INSTALLATION HOLES.

ALWAYS ADD PRIMER - WHEN ADDING INSTALLATION HOLES BE SURE TO USE A SELF-ETCHING PRIMER TO PREVENT CORROSION, FASTENER FAILURE AND INJURY.

MOUNTING POINTS MUST HAVE METAL-TO-METAL CONTACT - USE PROVIDED MOUNTING SPACERS TO ACCOMMODATE FOR VEHICLE FEATURES, CARPET OR SUBFLOORS.

PROVIDE CLEARANCE FOR SPACERS - IF THE INSTALLATION VEHICLE CONTAINS A CARPET OR SUBFLOOR, USE A 1-3/16" DIAMETER CARPET CUTTER (P/N: 31183-0) AT ALL MOUNTING LOCATIONS TO OPEN UP ROOM FOR SPACERS.

CHECK SPACER ORIENTATION - BE SURE THAT THE INDENT IN THE SPACER COVERS THE PLUSNUT HEAD; THIS ENSURES THE MOST METAL-TO-METAL CONTACT AND REDUCES VIBRATION.

PLUSNUT INSTALLATION - A PLUSNUT GUN IS RECOMMENDED FOR PLUSNUT INSTALLATION FOR ITS PRODUCTION SPEED. HOWEVER, A PLUSNUT SETTING TOOL CAN ALSO BE USED (P/N: 22200-0).

THRU-BOLT CLEARANCE - WHEN USING A THRU-BOLT AT ANY MOUNTING LOCATION, BE SURE THAT YOUR HOLE HAS 1/16" CLEARANCE.

BEST PRACTICE: ORGANIZE ALL FASTENERS & VERIFY THAT ALL ARE ACCOUNTED FOR

FASTENERS USED

BAG REFERENCE: **BAG80398**

ITEM NO.	PART NUMBER	DESCRIPTION	QTY.
1	FAS0092	SCREW, HEX HD, 5/16-18X1.50 ZN PLATE, G8	4
2	FAS0091	PLUSNUT, 5/16	4
3	FAS0398	BOLT,CRG 5/16-18X1.0 SS	8
4	FAS1025	HHCS FLNG 1/2"-13, 1-1/2" 18-8 SS	2
5	26618-0	SILICONE SEALANT	1
6	FAS0552	WASHER, FLAT, 5/16, SST	8
7	FAS0688	EPDM WASHER	8
8	FAS0940	SCREW, BHTX 1/4-20X1 SS NP	9
9	FAS0584	RIVET, BLIND, DOMEHEAD, 1/4 X .25 GRIP	12
10	FAS0242	SCREW, HEX HD, 5/16-18X1.50 STAINLESS STEEL	10

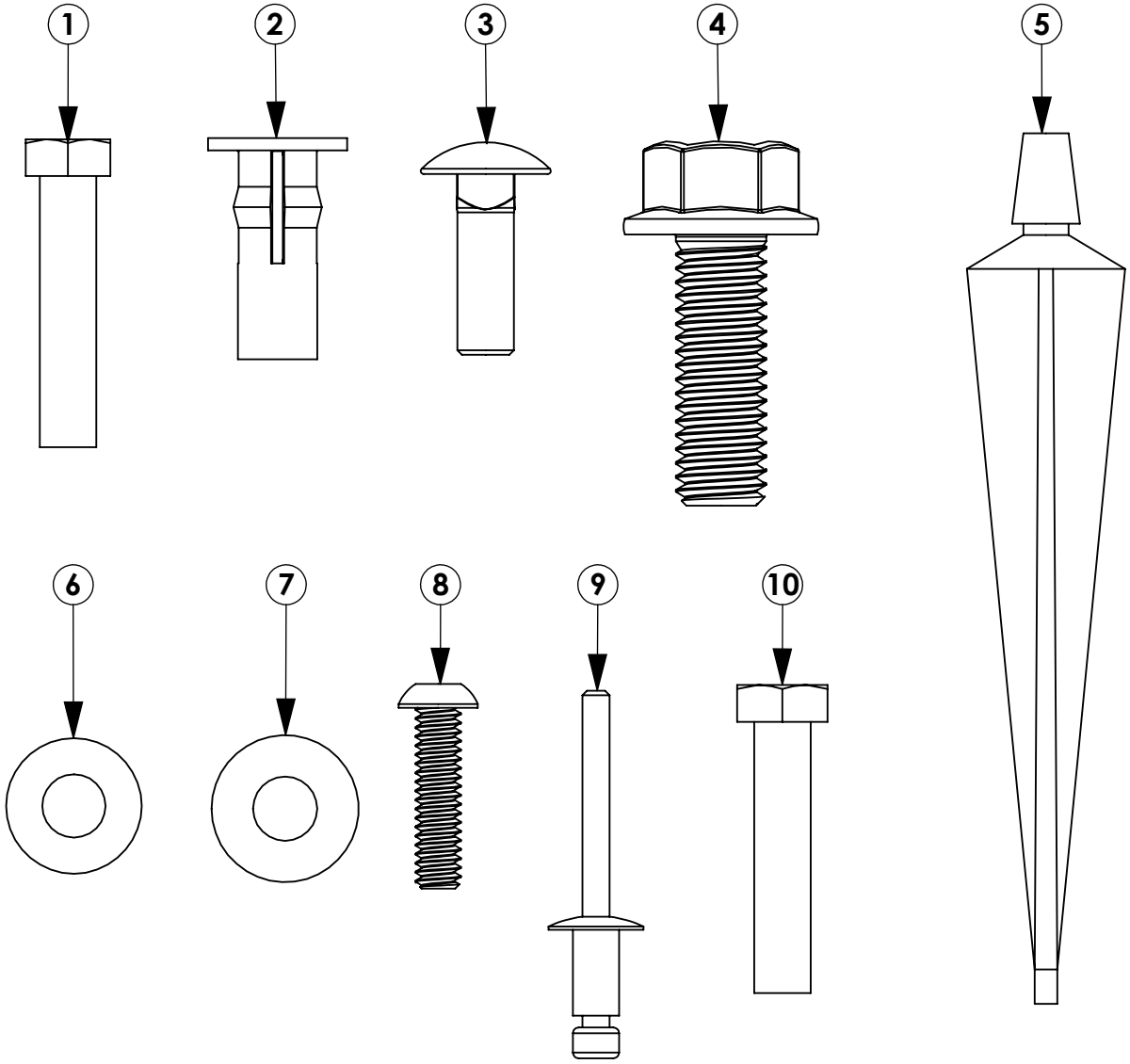

CONTINUE ON NEXT PAGE

INTENTIONALLY LEFT BLANK

BEST PRACTICE: ORGANIZE ALL FASTENERS & VERIFY THAT ALL ARE ACCOUNTED FOR

FASTENERS USED

BAG REFERENCE: **BAG80398**

ITEM NO.	PART NUMBER	DESCRIPTION	QTY.
11	FAS1026	NUT, HEX NLK FLG 1/2-13 SS	2
12	FAS0248	NUT, NYLON INSERT LOCK, 5/16-18 SST	18
13	FAS0098	WASHER, LOCK, SPLIT, 5/16, ZINC PLATE	4
14	FAS0086	WASHER,FLAT USS 5/16 ZP	4
15	FAS0055	NUT,HEX NLK FLG 1/4-20 ZP	9
16	FAS0334	WASHER,FLAT 1/2 SS	2
17	FAS0245	WASHER, FLAT, 5/16 HRD, ZN	20
18	FAS0234	WASHER, FLAT, 1/4, SST	9
19	FAS0164	WASHER,FLAT,SAE,5/16,ALUM	10

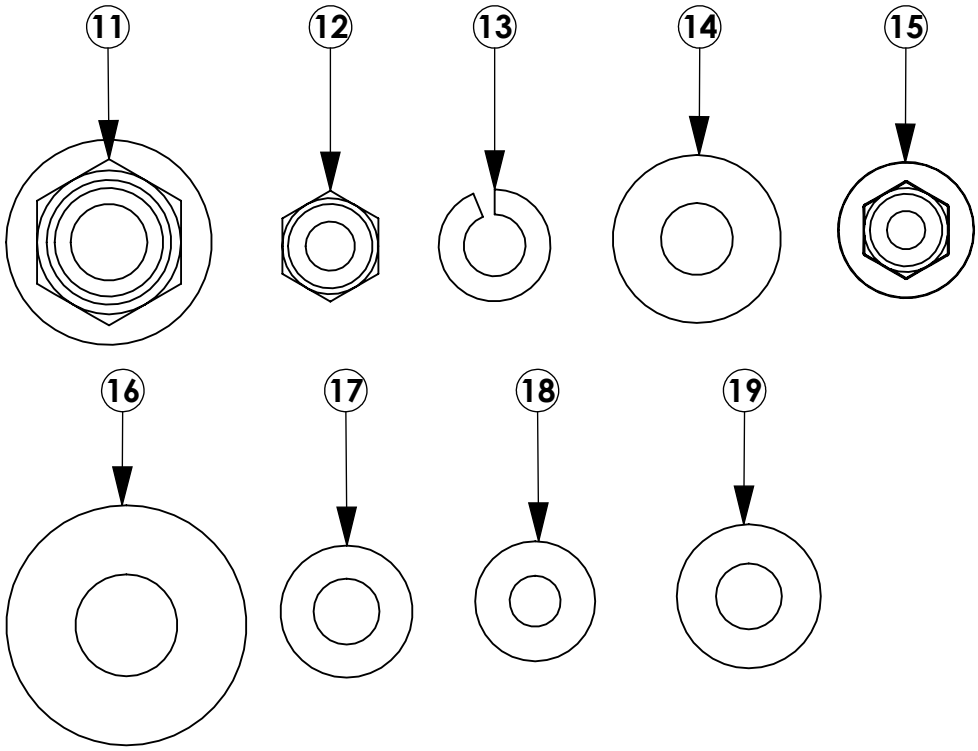

CONTINUE ON NEXT PAGE

INTENTIONALLY LEFT BLANK

STEP 1 - DETERMINE WHICH BOX WILL BE THE PS AND DS SIDE - THESE BOXES WILL SHIP FROM ASC SYMETRICAL

Step 1.1
IDENTIFY WHAT SIDE OF THE BOX WILL BE FASCING FORWARD AND REARWARD ON THE VEHICLE.

Step 1.2
FULLY TIGHTEN FAS0000 AND FAS0000 TO SECURE MECH. OR E-LOCK TO DOOR SEE LATCH INSTRUCTION FOR MORE DETAIL.

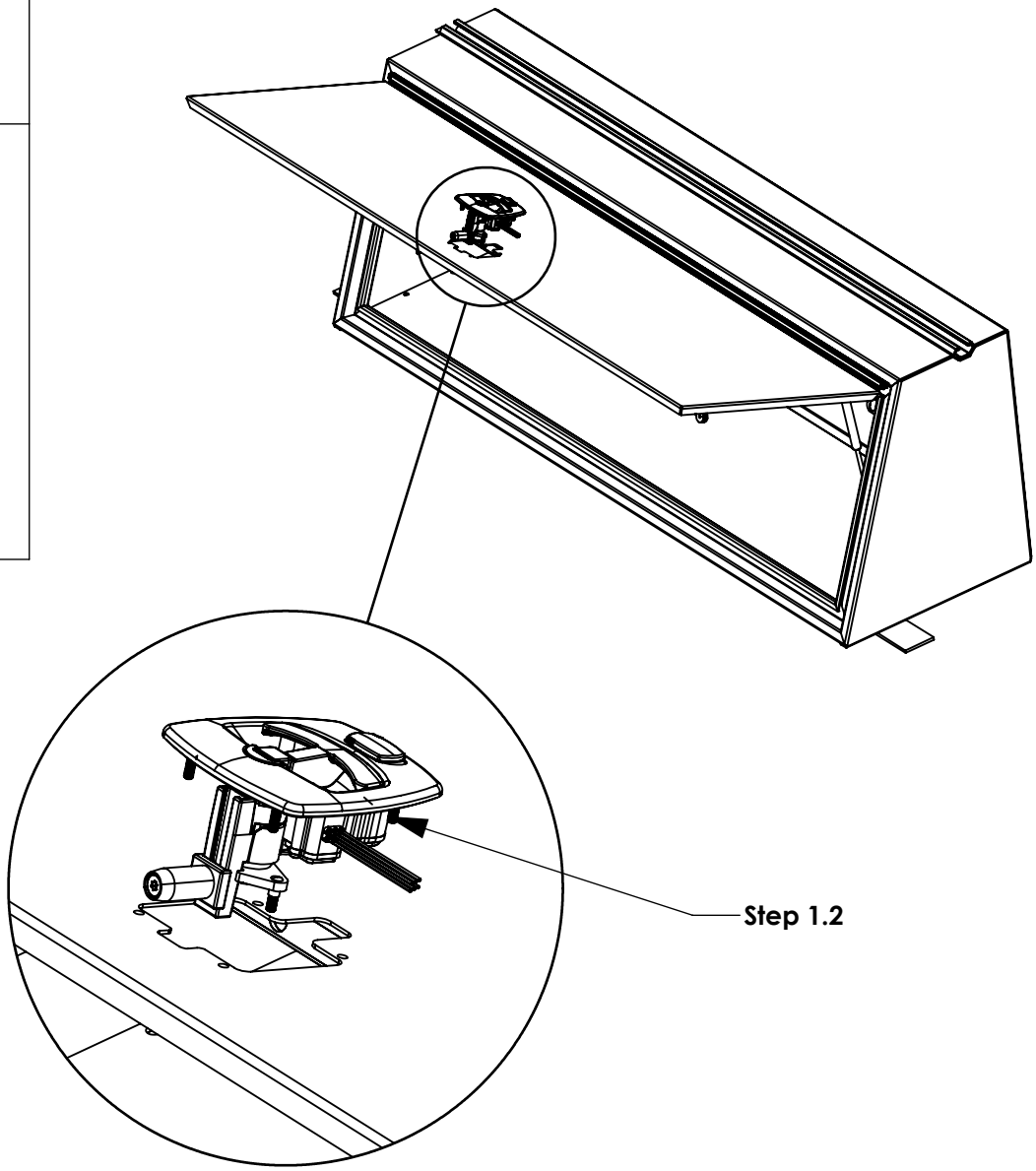

STEP 2.1 - PREP BED (FORD)

Step 2.1.1
LOCATE THE BED SUPPORT BRACEKTS IN THE TS-BK BOX, THESE ARE VEHICLE SPECIFIC. MAKE SURE THE PARTS YOU HAVE MATCH THE BOM FOR YOUR VEHICLE

Step 2.1.2
FOR FORD/RAM VEHICLE, REMOVE THE TAIL LIGHTS TO GAIN ACCESS TO MOUNTING HOLE SHOWN

Step 2.1.3
INSTALL REAR BRACKETS. YOU WILL NEED TO LOOSEN AND RETIGHTEN AT THE VERY END OF INSTALL PRIOR TO REINSTALLING TAIL LIGHT.

FULLY TIGHTEN (2)FAS1025, (2)FAS1026, & (2)FAS0334

1/2 WRENCH
1/2 SOCKET

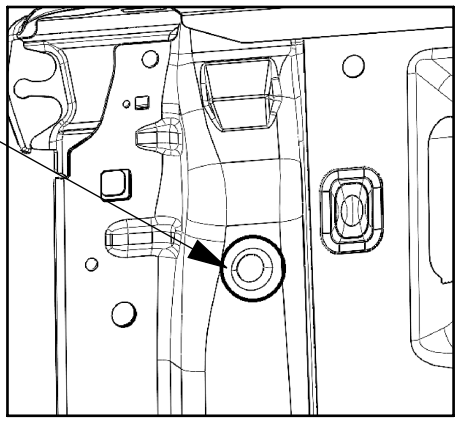

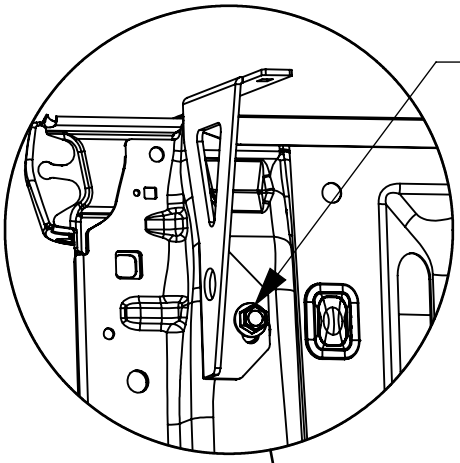

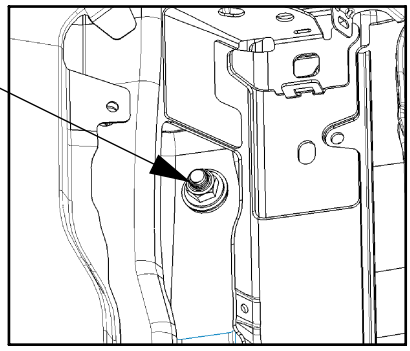

VIEW FROM INSIDE TAIL LIGHT

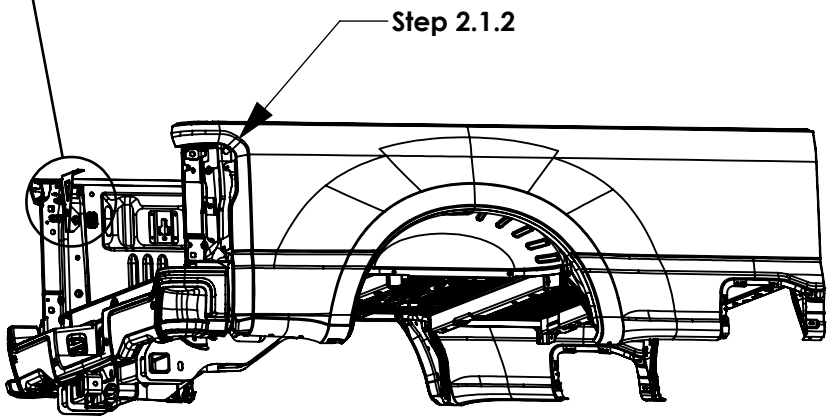

STEP 2.2 - PREP BED (RAM)

Step 2.2.1
LOCATE THE BED SUPPORT BRACEKTS IN THE TS-BK BOX, THESE ARE VEHICLE SPECIFIC. MAKE SURE THE PARTS YOU HAVE MATCH THE BOM FOR YOUR VEHICLE

Step 2.2.2
FOR RAM VEHICLE, REMOVE THE TAIL LIGHTS TO GAIN ACCESS TO MOUNTING HOLE SHOWN

Step 2.2.3
IDENTIFY OEM HOLE AT REAR OF BED (CIRCLES ABOVE) DRILL OUT TO .565" USING A STEP BIT ON BOTH SIDES OF BED

Step 2.2.4
INSTALL REAR BRACKETS. YOU WILL NEED TO LOOSEN AND RETIGHTEN AT THE VERY END OF INSTALL PRIOR TO REINSTALLING TAIL LIGHT.

FULLY TIGHTEN (2)FAS1025, (2)FAS1026, & (2)FAS0334

1/2 WRENCH
1/2 SOCKET

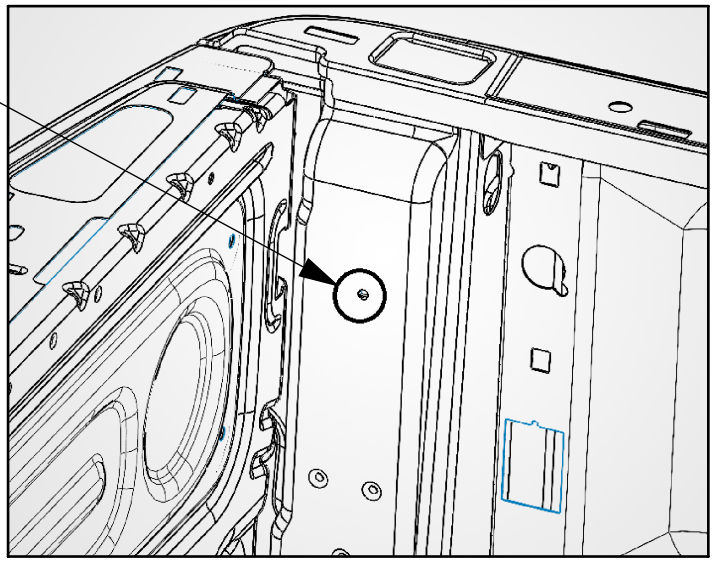

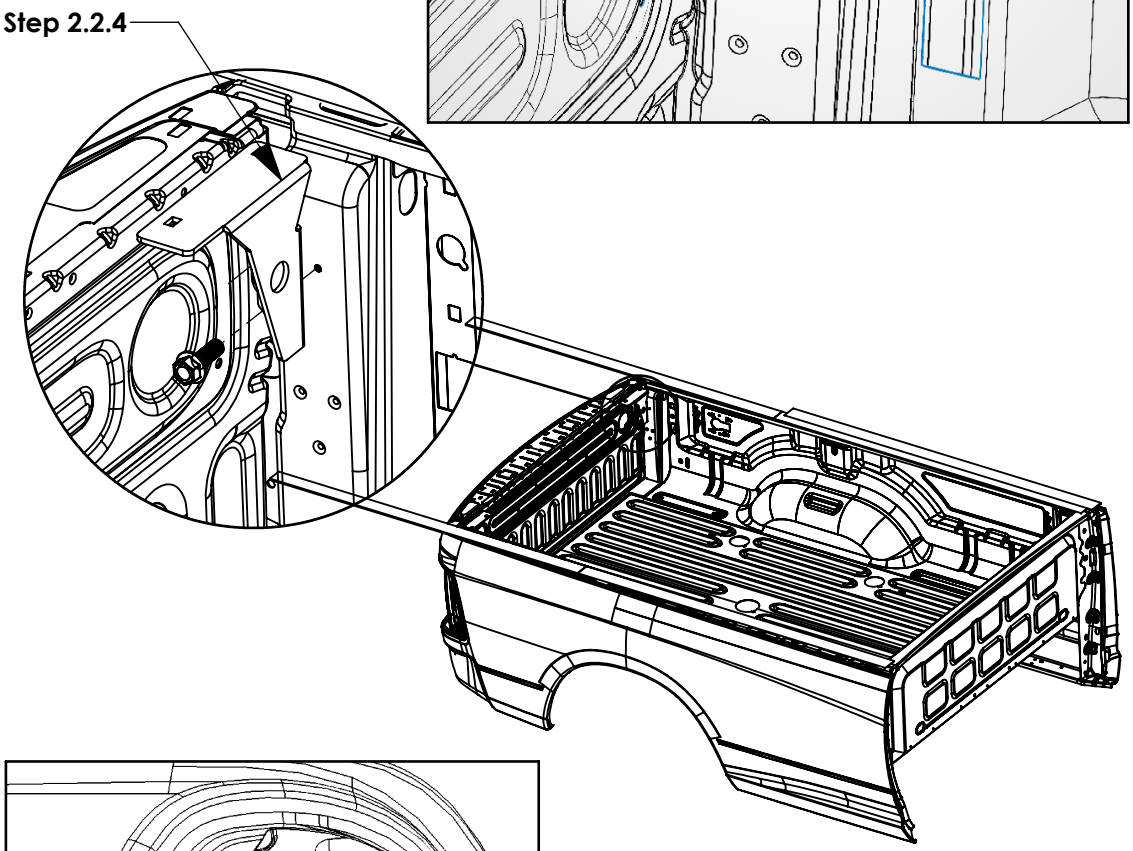

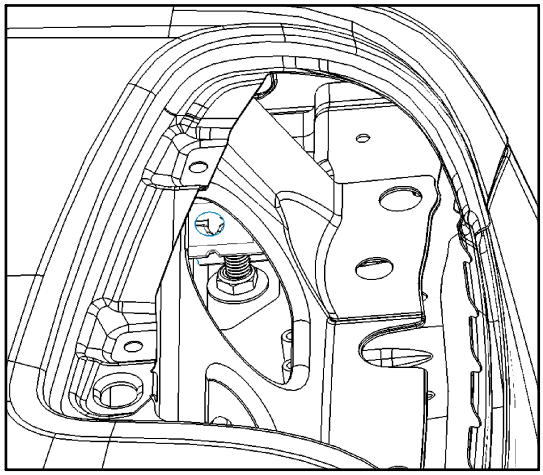

VIEW FROM INSIDE TAIL LIGHT

STEP 2.3 - PREP BED (GM)

Step 2.3.1
LOCATE THE BED SUPPORT BRACEKTS IN THE TS-BK BOX, THESE ARE VEHICLE SPECIFIC. MAKE SURE THE PARTS YOU HAVE MATCH THE BOM FOR YOUR VEHICLE

Step 2.3.2
FOR 1500, ALIGN TOP HOLE ON BED BRKT WITH HOLE SHOWN ON REAR OF TRUCK BED AND MARK CENTER OF LOWER SLOT WITH PAINT PEN

FOR 2500, ALIGN BOTTOM HOLE ON BED BRKT WITH BOTTOM HOLE SHOWN ON REAR OF TRUCK BED AND MARK CENTER OF SLOT WITH PAINT PEN.

Step 2.3.3
DRILL OUT OEM HOLE AND PAINT MARKED HOLE FOR 5/16" PLUS NUT AND INSTALL FAS0091

Step 2.1.4
INSTALL REAR BRACKETS FULLY TIGHTEN (2)FAS1025, (2)FAS1026, & (2)FAS0334

1/2 WRENCH
1/2 SOCKET

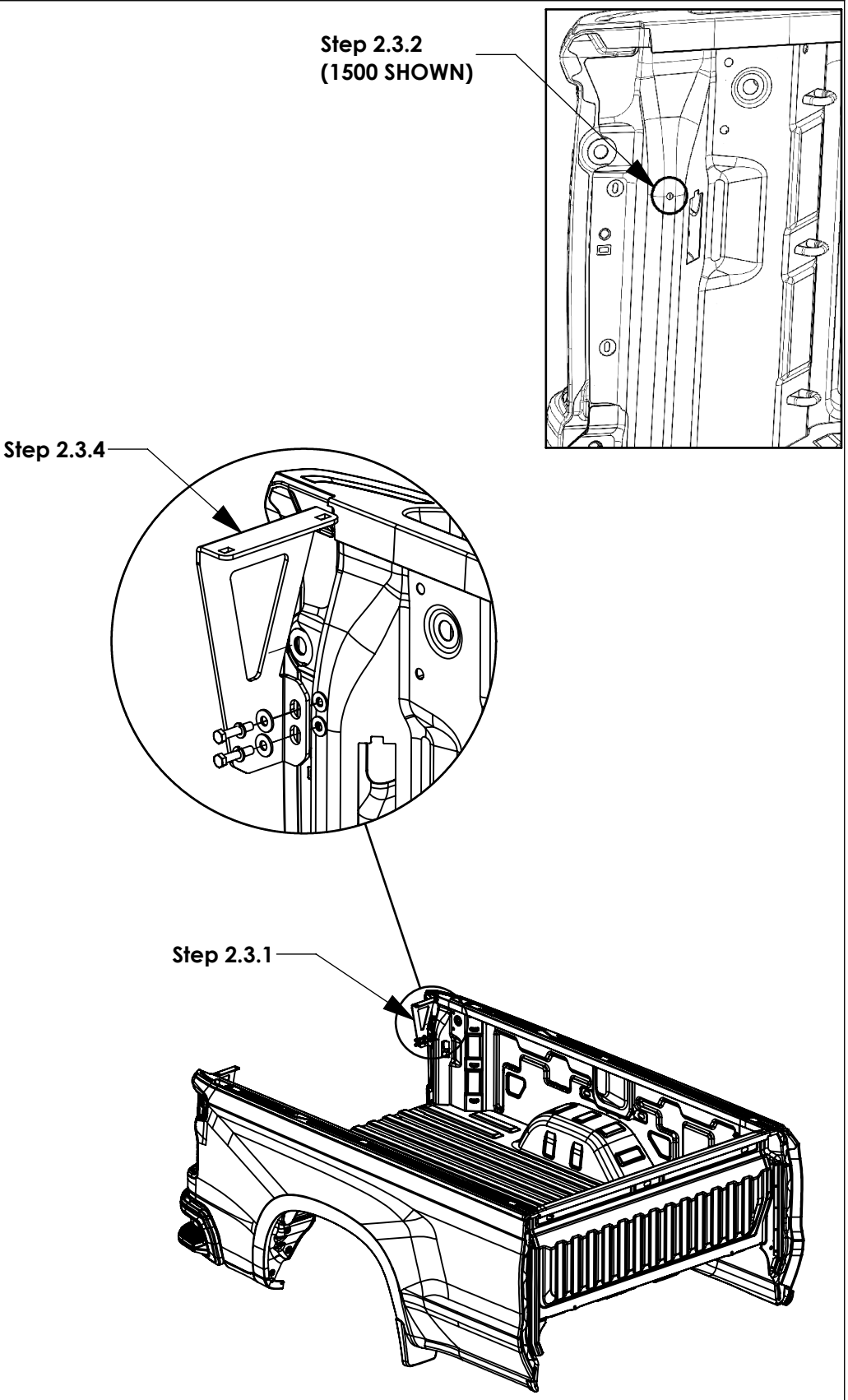

STEP 3 - PREP BED WITH FOAM STRIPS

Step 3.1
APPLY FOAM STRIPS 73632 (QTY4 x FOR WHOLE BED-2 EACH SIDE) START FLUSH WITH THE END OF THE CAB SIDE OF THE BED RAIL.
DO NOT TRIM EXCESS UNTIL FULLY INSTALLED.

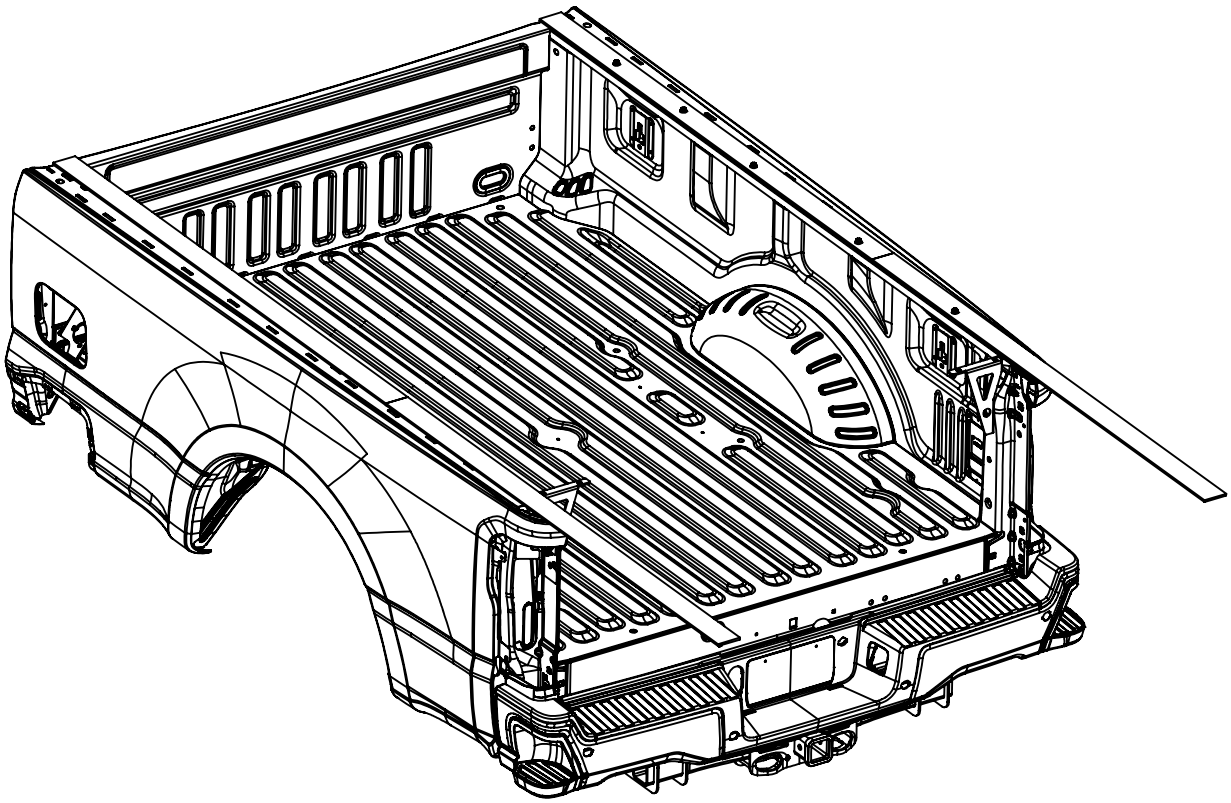

STEP 4 - PLACE BOXES ON BED SO THE OVERHANG THE TAILGATE BY 2-3 FEET - ATTACH BOXES WITH FRONT RAIL SUPPORT

Step 4.1
PLACE BOXES ON BED AS SHOWN ALIGN 79950-B TO THE BOTTOM OF BOTH BOXES ON THE CAB SIDE OF THE VEHICLE.

Step 4.2
HAND TIGHTEN ASSEMBLY UNTIL AFTET STEP 7.1 THEN FULLY TIGHTEN.
(4)FAS0398,
(4)FAS0248, &
(4)FAS0688

1/2" WRENCH
1/2" SOCKET

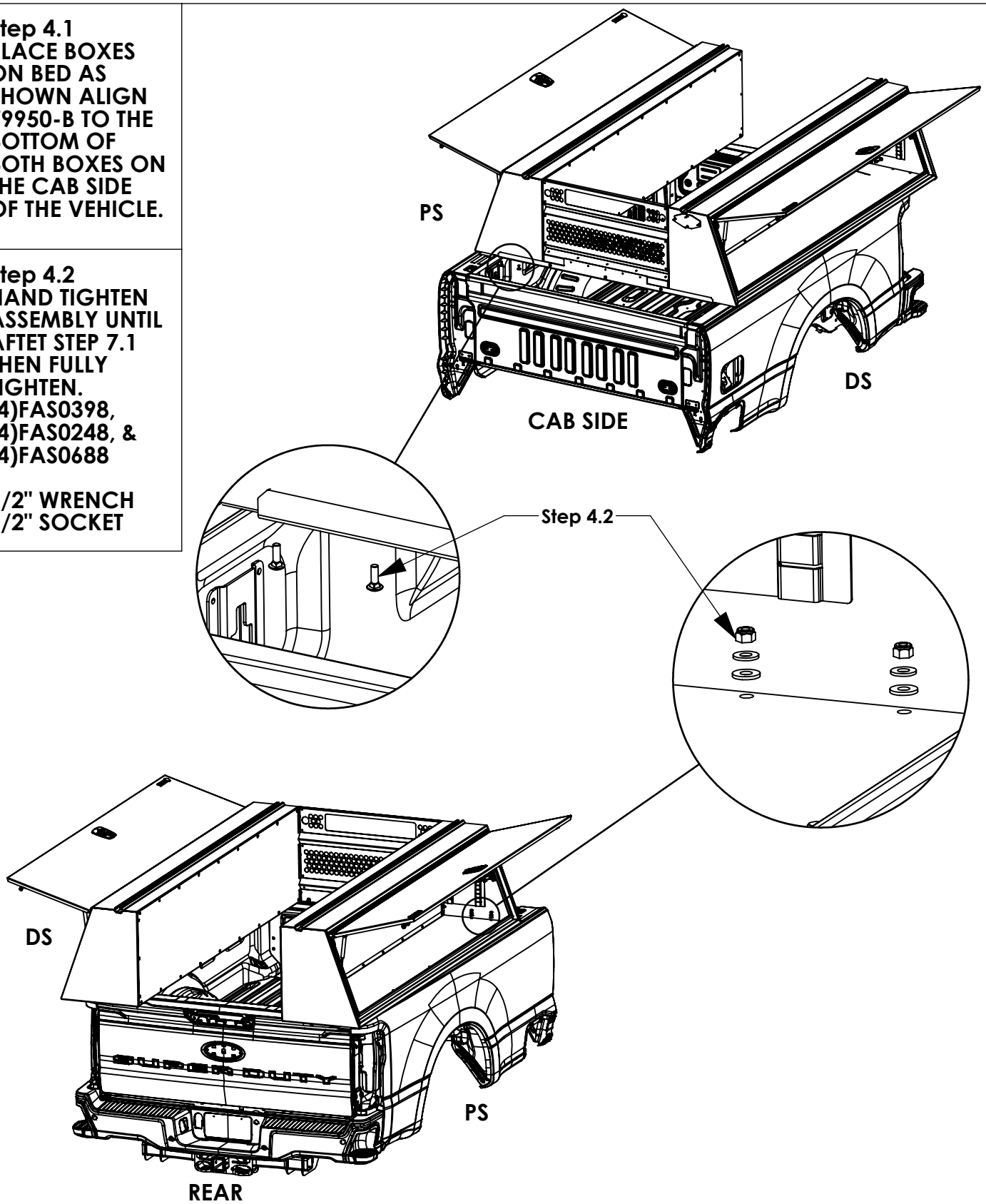

STEP 4 - SET CAB GUARD IN PLACE IN ORIENTATION SHOWN - USE PRY BAR TO WEDGE INTO PLACE IF NECESSARY

Step 4.3
FULLY TIGHTEN (3)FAS0055, (3)FAS0234, 7 (3)FAS0920

7/16 WRENCH
7/16 SOCKET

Step 4.4
FULLY TIGHTEN (6)FAS0055, (6)FAS0920 ON BOTH SIDES OF THE CAB GUARD

7/16 WRENCH
7/16 SOCKET

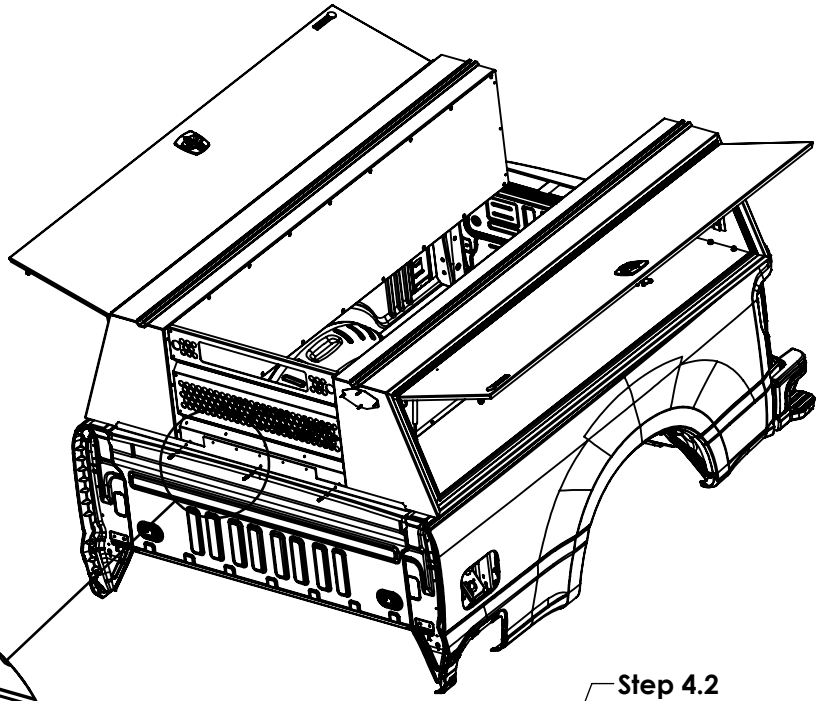

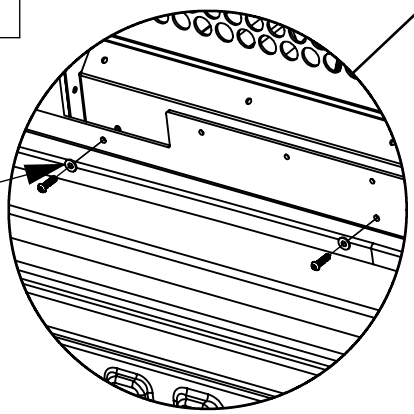

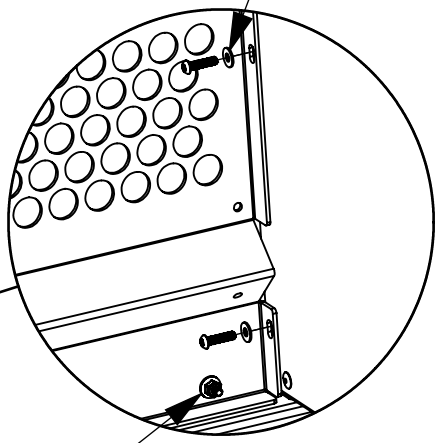

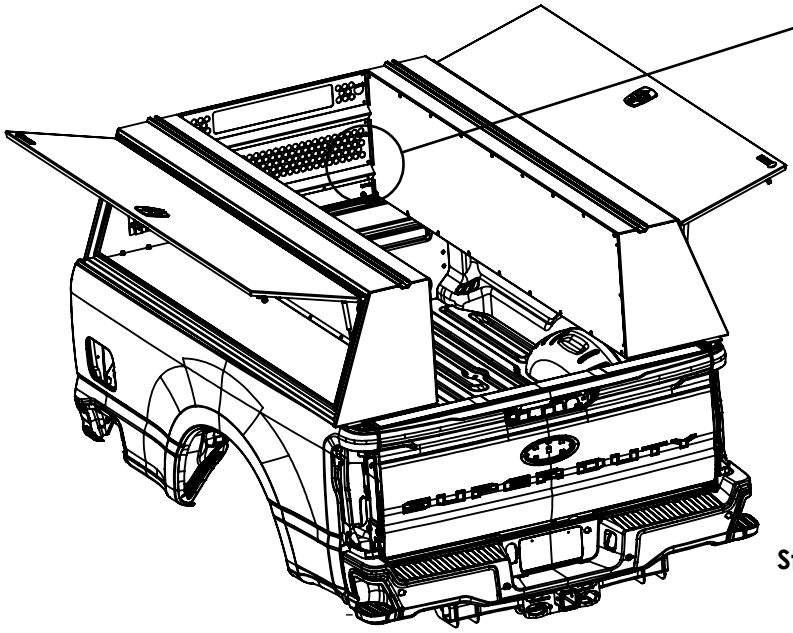

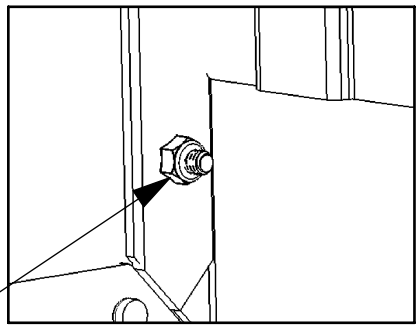

VIEW FROM INSIDE TOOL BOX

CHECK THAT THE BOXES ARE CENTERED ON VEHICLE

STEP 5 - MEASURE DISTANCE FROM BED RAIL AT CURB SIDE AND ENSURE BOTH SIDES ARE EQUAL

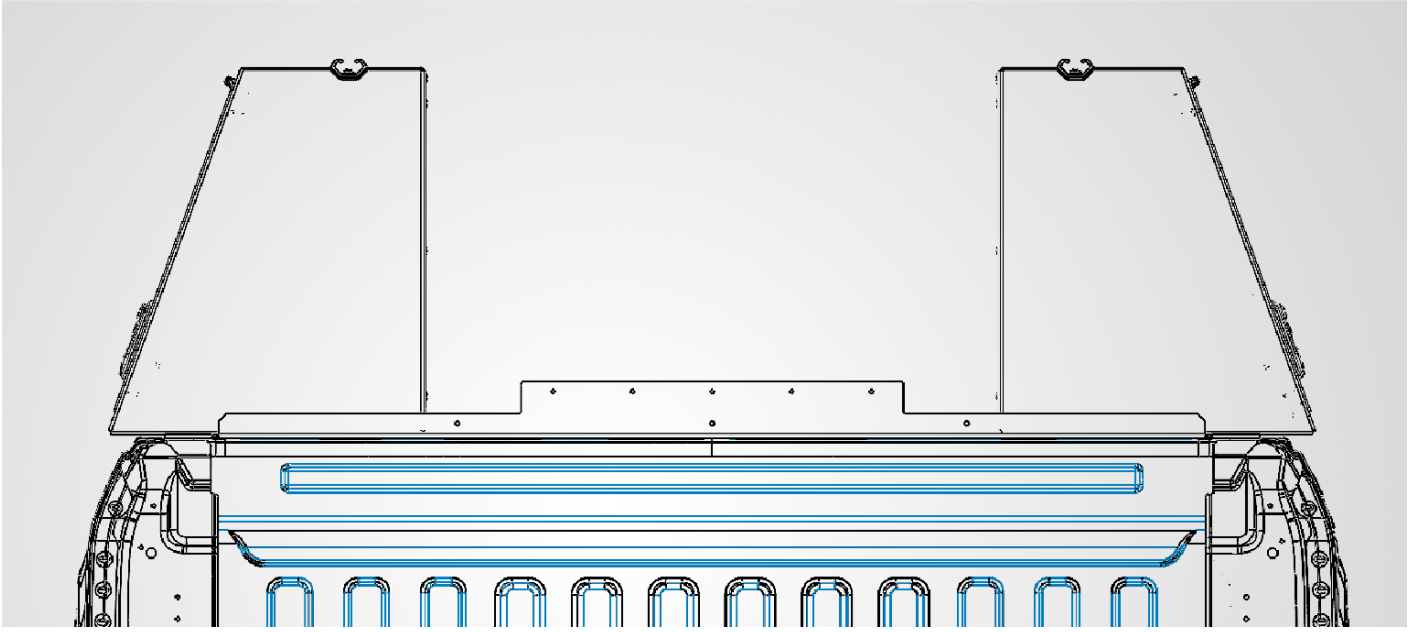

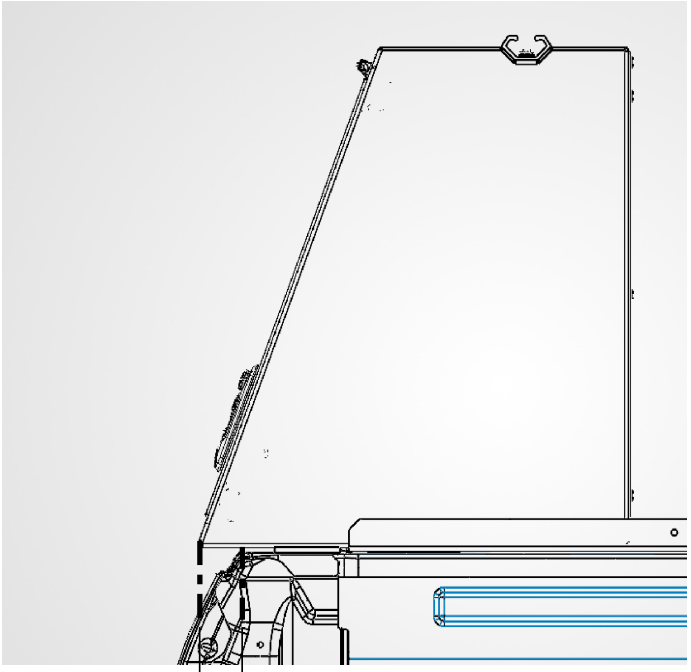

ENSURE THIS DISTANCE IS THE SAME ON BOTH SIDES OF VEHICLE

STEP 6 - INSTALL FASTENERS TO SECURE BOXES TO REAR GUSSET SUPPORTS

Step 6.1
BOLT BOXES TO REAR SUPPORTS FULLY TIGHTEN (4)FAS0248, (4)FAS0164, (4)FAS0688, & (4)FAS0398

9/16 WRENCH
9/16 SOCKET

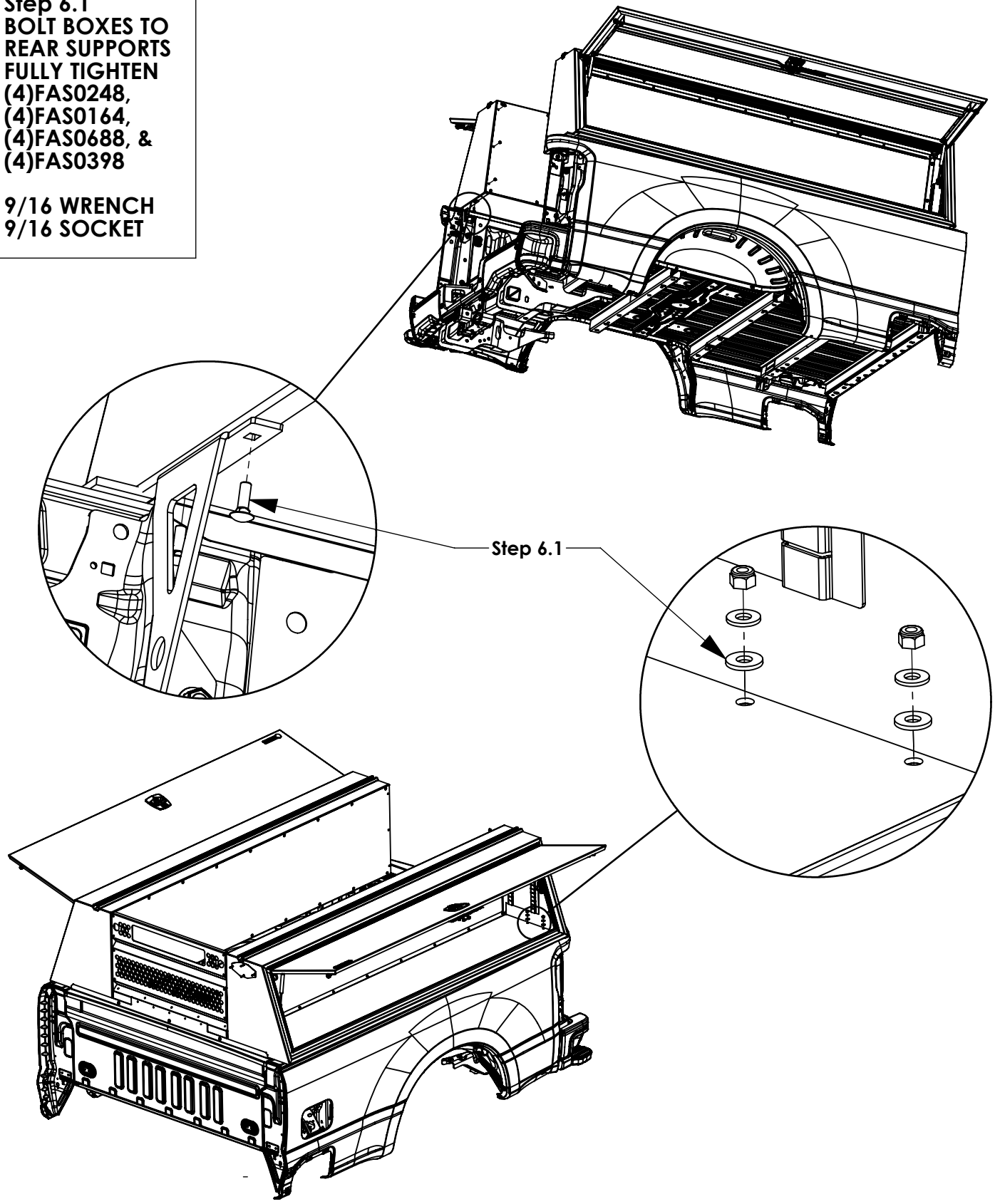

STEP 7 - INSTALL RIVETS AT REAR OF BOXES TO SEAL

Step 7.1
INSTALL RIVET (6)FAS0584 RIVET IN 3 LOCATIONS ON REAR OF EACH BOX

RIVET GUN

REINSTALL TAIL LIGHTS AND FULLY ALL TIGHTEN FASTENERS

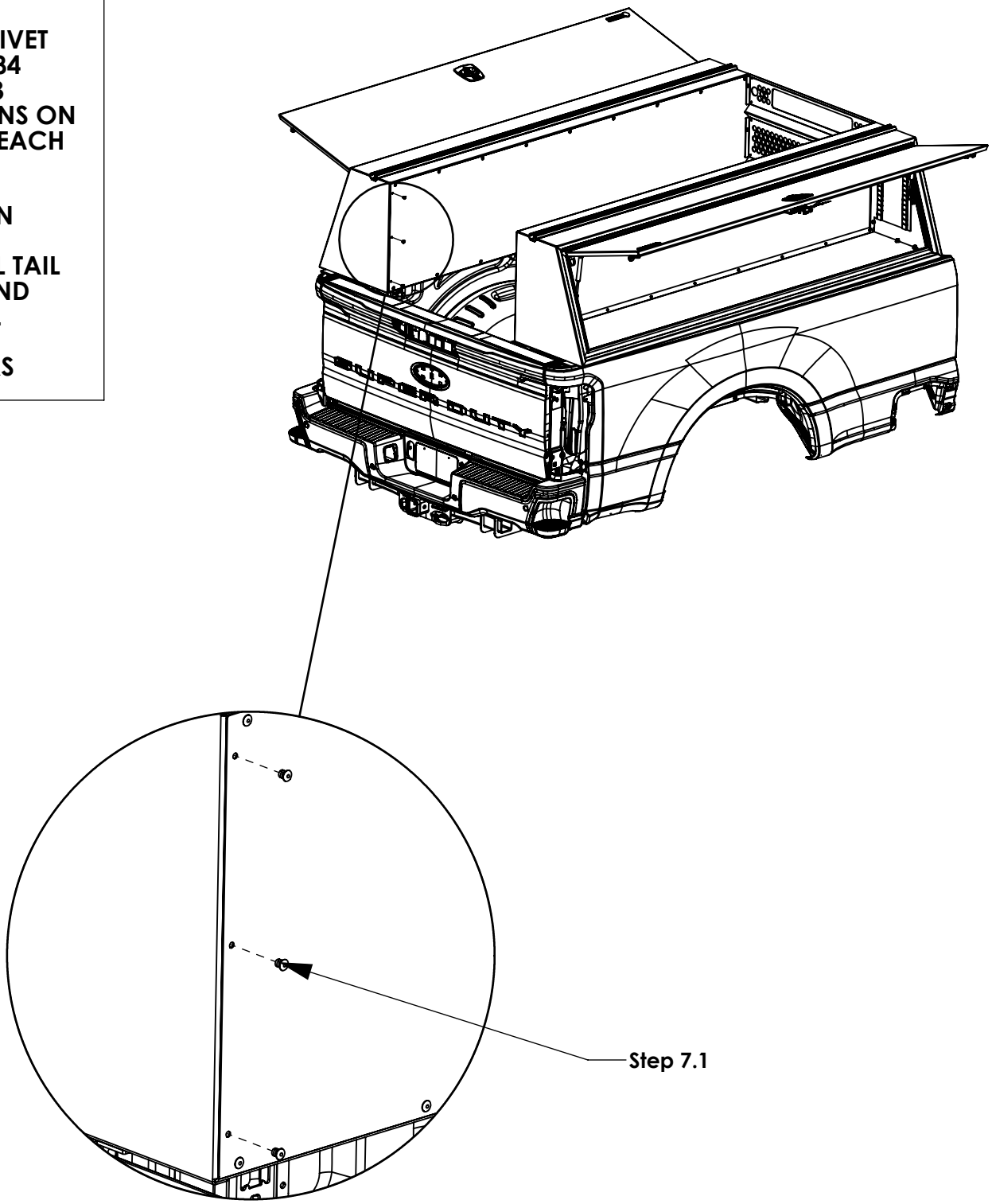

STEP 8 - DRILL BED RAIL MOUNTING HOLES

Step 8.1
IDENTIFY THE CORRECT DRILL JIG FOR THE VEHICLE YOUR REINSTALLING ON

RAM 1/2/3500 - 8'

F-150 - 8'

F-250/350 - 8'

GM 1/2/3500 - 8'

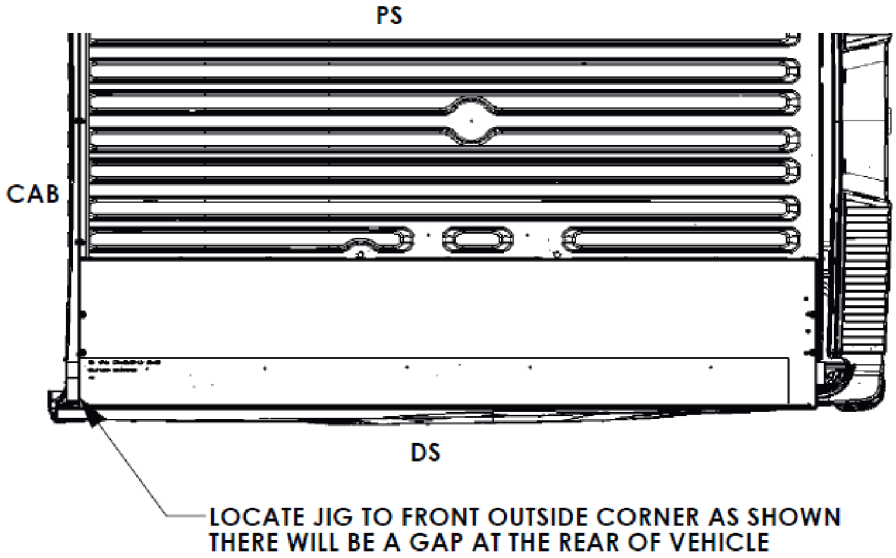

Step 8.2
PLACE JIG IN VEHICLE AS SHOWN. START ON DS

FILP JIG TO MIRROR ON PS

MARK ALL HOLES WITH PAINT PEN

NOTE:
FOR 6' BEDS IGNORE Step 8.1 & 8.2,
USE PAINT PEN TO MARK 4 HOLES EVENLY SPACED IN TOOL BOX AND TRUCK BED RAIL TO DRILL. CONTINUE TO Step 8.3

Step 8.3
USING A STEP BIT OR 3/8 DRILL BIT, DRILL OUT ALL MARKED HOLES ON DS AND PS BED RAIL

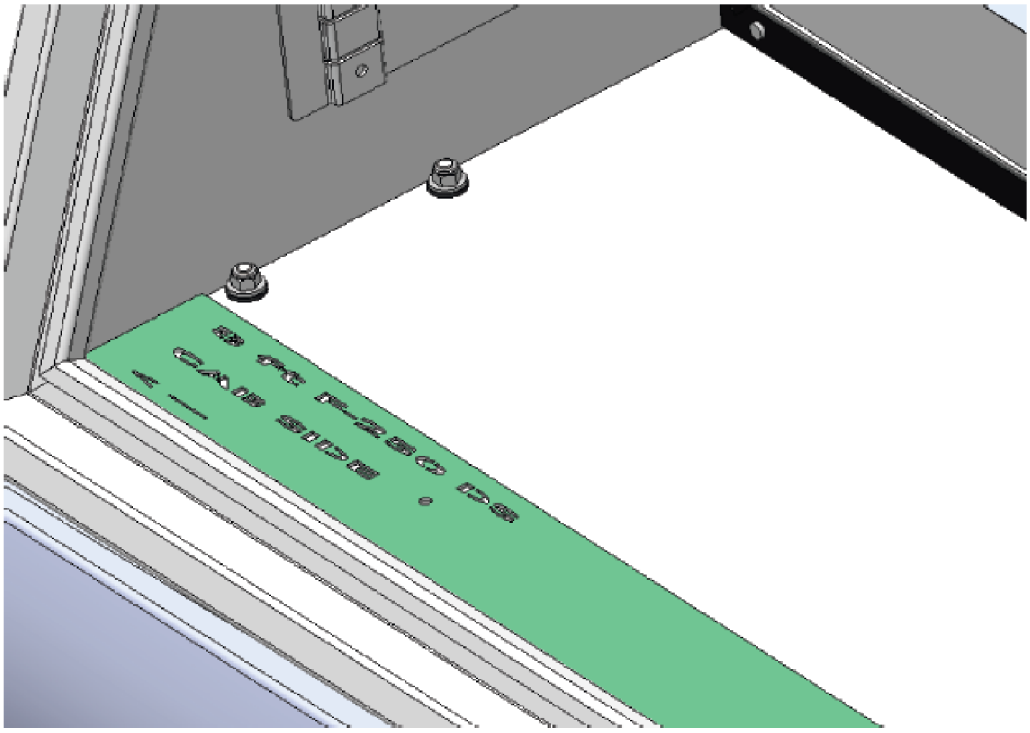

STEP 10 - INSTALL 10 BED RAIL FASTENERS AND FULLY TIGHTEN

Step 10.1
REMOVE JIGS
FULLY TIGHTEN
(10)FAS0242,
(10)FAS0245,
(20)FAS0254 TO
SECURE BOXES
TO BED RAIL

1/2 WRENCH
1/2 SOCKET

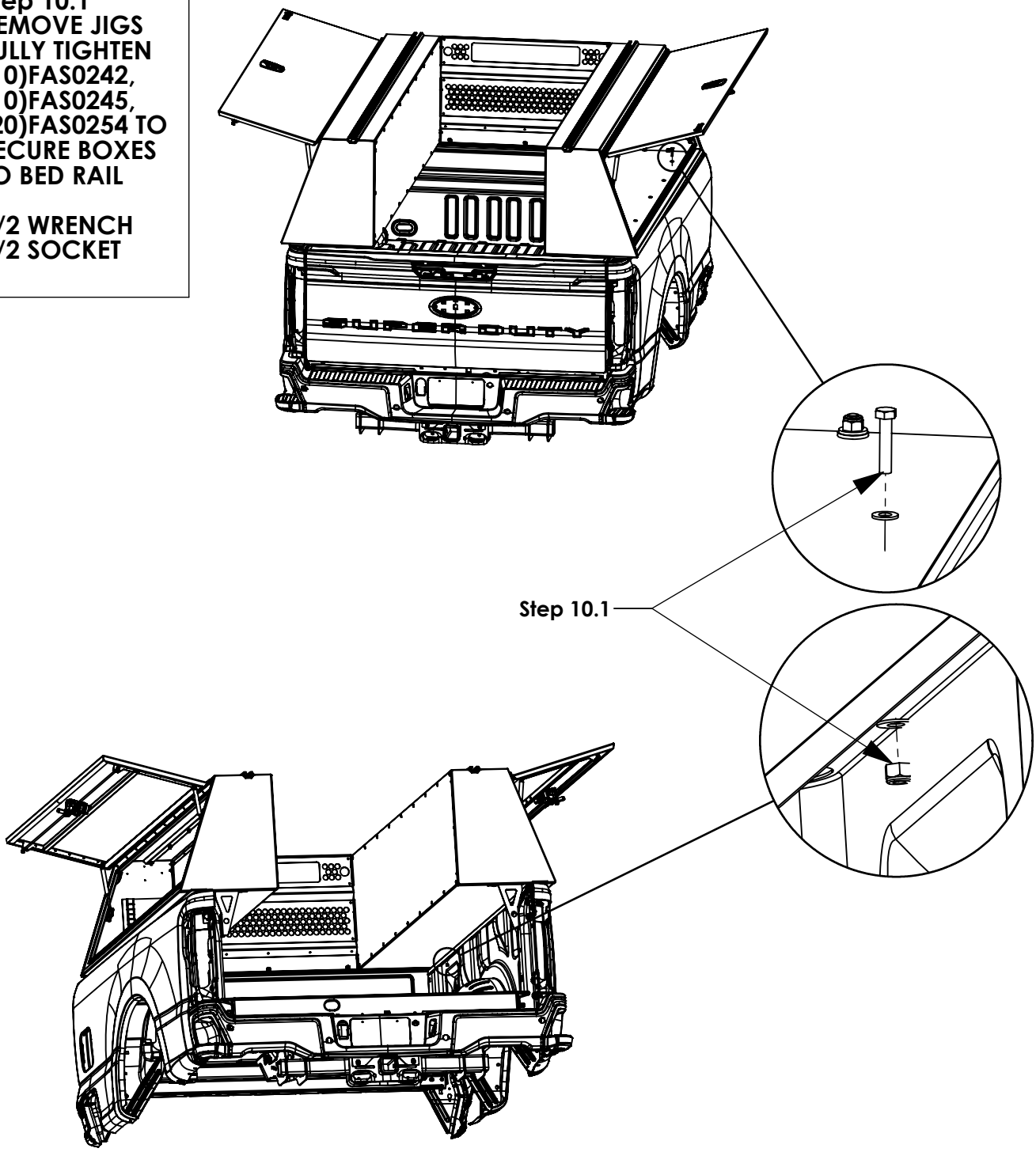

INSTR. NUMBER	PG:	REV:
: 83171	1	A

PART NUMBER : **SEE BOM**

PART DESC. : TSBX KIT WITHOUT GUARD

TSBX-6F1E-NG

ITEM NO.	PART NUMBER	DESCRIPTION	QTY.
1	TS-BOX6	TOP SIDE BOX, 6' ASSEMBLY	2
2	TS-BK6F1	TSBX FORD F-150 6' CAB GUARD/BED BRKT KIT	1
3	81246	KIT,TOPSIDER,6FT,FULL	1
4	81248	CHMSL KIT TSBX	1

NOTE:
FOR KITS WITH CAB GUARD REFER TO
81821 FOR 6' BEDS &
80397 FOR 8' BEDS

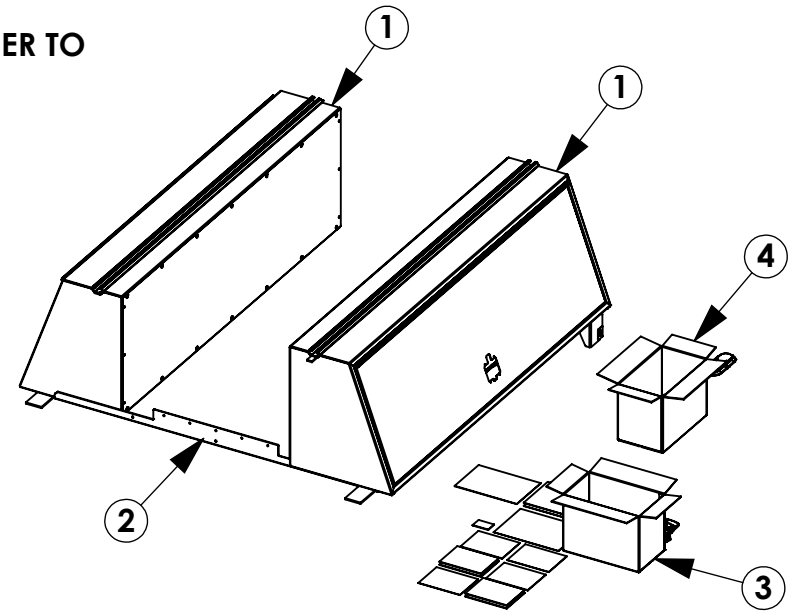

TSBX-8F1E-NG

ITEM NO.	PART NUMBER	DESCRIPTION	QTY.
1	TS-BOX8	TOP SIDE BOX, 8' ASSEMBLY	2
2	TS-BKF2	TSB FORD 8' BED BRKT KIT	1
3	81244	KIT,TOPSIDER,8FT,ELOCK W/LIGHTING	1
4	81248	KIT, TAILGATE CHMSL	1

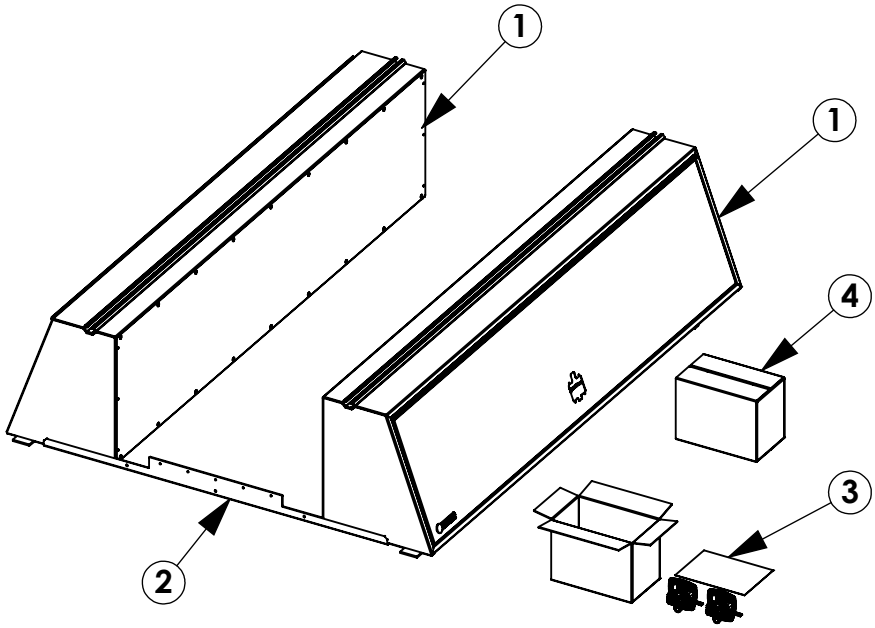

TOOLS NEEDED:

- **1/2 SOCKET**
- **1/2 WRENCH**
- **RIVET GUN**
- **STEP BIT**
- **DRILL**
- **3/8" DRILL BIT**
- **1/2" DRILL BIT**
- **9/16" WRENCH**
- **9/16" SOCKET**

INSTR. NUMBER : 83171	PG: 2	REV: A
PART NUMBER : SEE BOM		
PART DESC. : TSBX KIT WITHOUT GUARD		

TSBX-6F1M-NG

ITEM NO.	PART NUMBER	DESCRIPTION	QTY.
1	TS-BOX6	TOP SIDE BOX, 6' ASSEMBLY	2
2	TS-BK6F1	TSBX FORD F-150 6' CAB GUARD/BED BRKT KIT	1
3	TMLHK2	TSBX MECHANICAL LOCK HATCH KIT	1
4	81248	CHMSL KIT TSBX	1

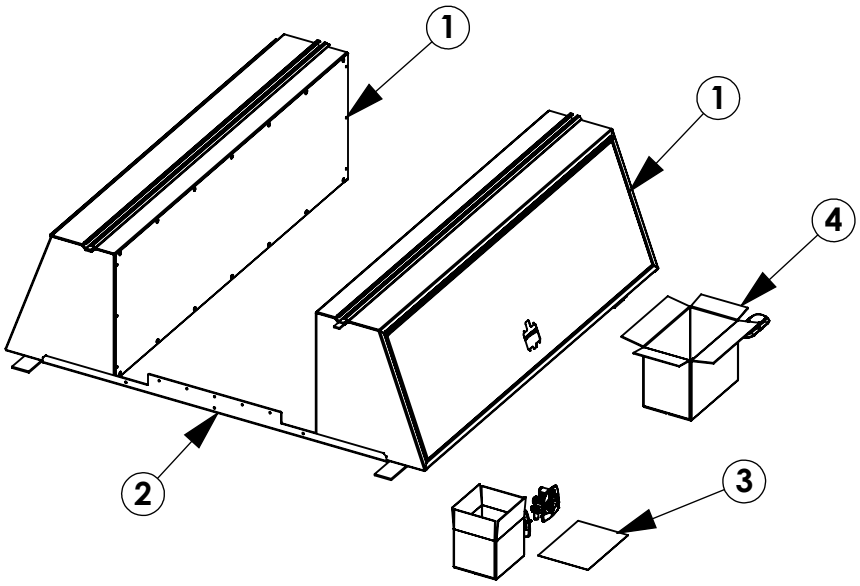

TSBX-8F1M-NG

ITEM NO.	PART NUMBER	DESCRIPTION	QTY.
1	TS-BOX8	TOP SIDE BOX, 8' ASSEMBLY	2
2	TS-BKF2	TSB FORD 8' BED BRKT KIT	1
3	TMLHK2	TSBX MECHANICAL LOCK HATCH KIT	1
4	81248	KIT, TAILGATE CHMSL	1

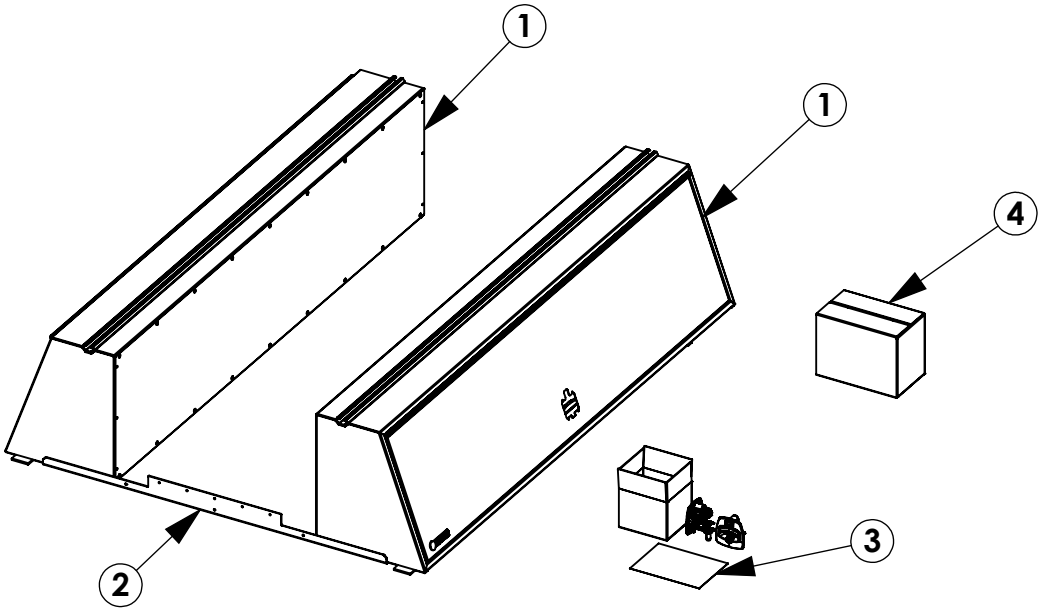

INSTR. NUMBER : 83171	PG: 3	REV: A
PART NUMBER : SEE BOM		
PART DESC. : TSBX KIT WITHOUT GUARD		

TSBX-6F2E-NG

ITEM NO.	PART NUMBER	DESCRIPTION	QTY.
1	TS-BOX6	TOP SIDE BOX, 6' ASSEMBLY	2
2	TS-BK6F2	TSBX, RAM 6' CAB BRK KIT	1
3	81246	KIT,TOPSIDER,6FT,FULL	1
4	81248	CHMSL KIT TSBX	1

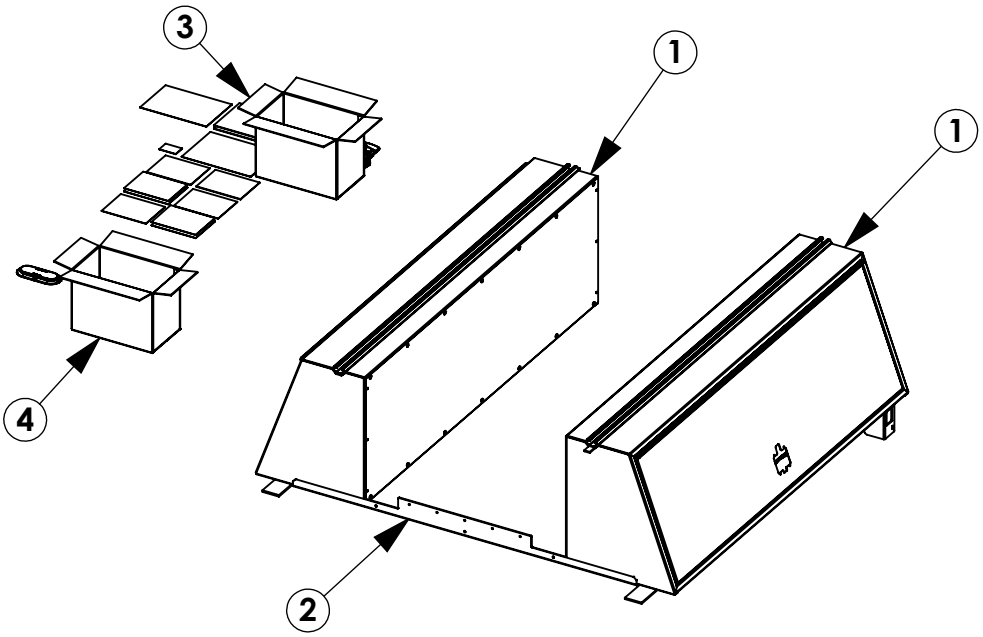

TSBX-8F2E-NG

ITEM NO.	PART NUMBER	DESCRIPTION	QTY.
1	TS-BOX8	TOP SIDE BOX, 8' ASSEMBLY	2
2	TS-BKF2	TSB FORD 8' BED BRKT KIT	1
3	81244	KIT,TOPSIDER,8FT,ELOCK W/LIGHTING	1
4	81248	CHMSL KIT TSBX	1

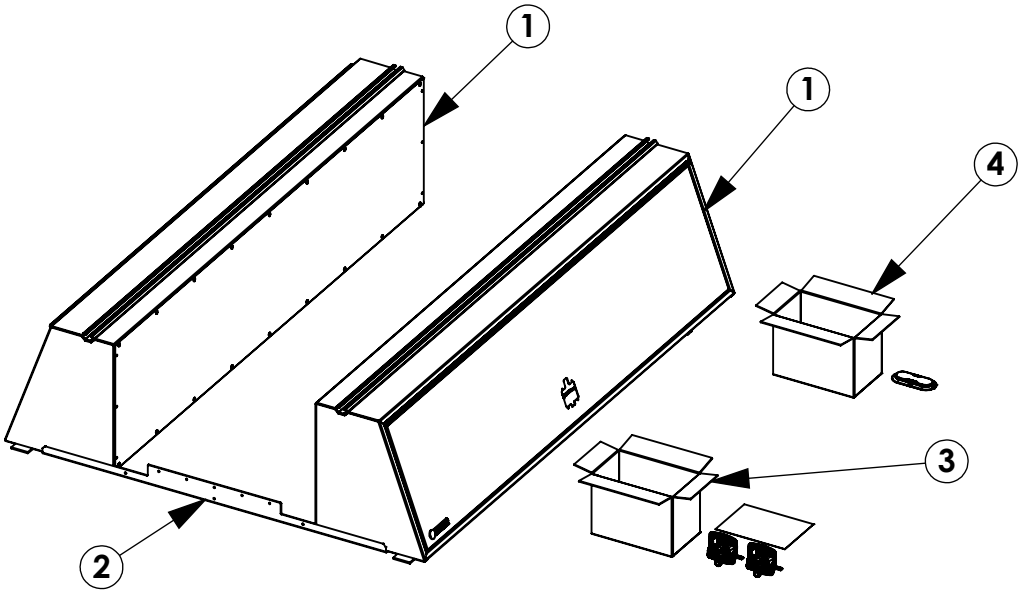

INSTR. NUMBER : 83171	PG: 4	REV: A
PART NUMBER : SEE BOM		
PART DESC. : TSBX KIT WITHOUT GUARD		

TSBX-6F2M-NG

ITEM NO.	PART NUMBER	DESCRIPTION	QTY.
1	TS-BOX6	TOP SIDE BOX, 6' ASSEMBLY	2
2	TS-BK6F2	TSBX, RAM 6' CAB BRK KIT	1
3	TMLHK2	TSBX MECHANICAL LOCK HATCH KIT	1
4	81248	CHMSL KIT TSBX	1

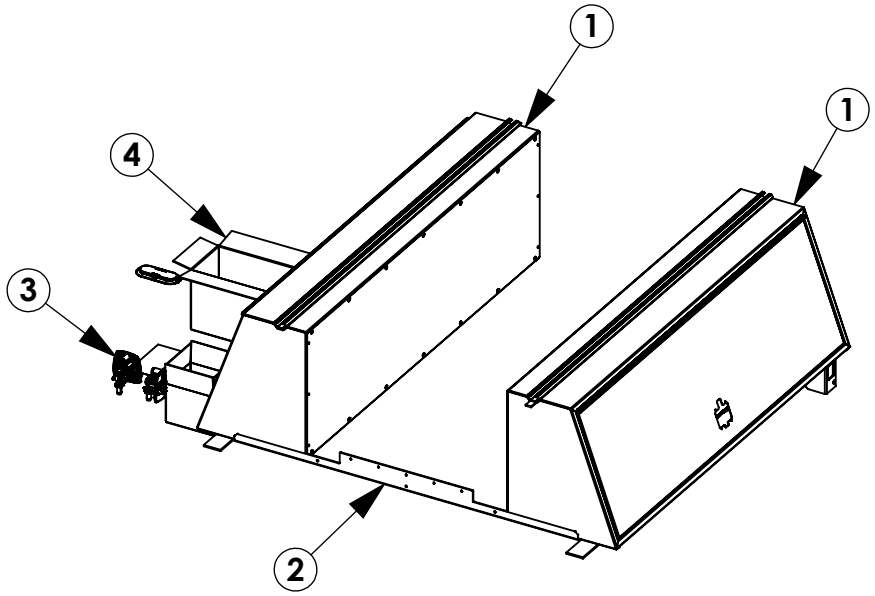

TSBX-8F2M-NG

ITEM NO.	PART NUMBER	DESCRIPTION	QTY.
1	TS-BOX8	TOP SIDE BOX, 8' ASSEMBLY	2
2	TS-BKF2	TSB FORD 8' BED BRKT KIT	1
3	TMLHK2	TSBX MECHANICAL LOCK HATCH KIT	1
4	81248	CHMSL KIT TSBX	1

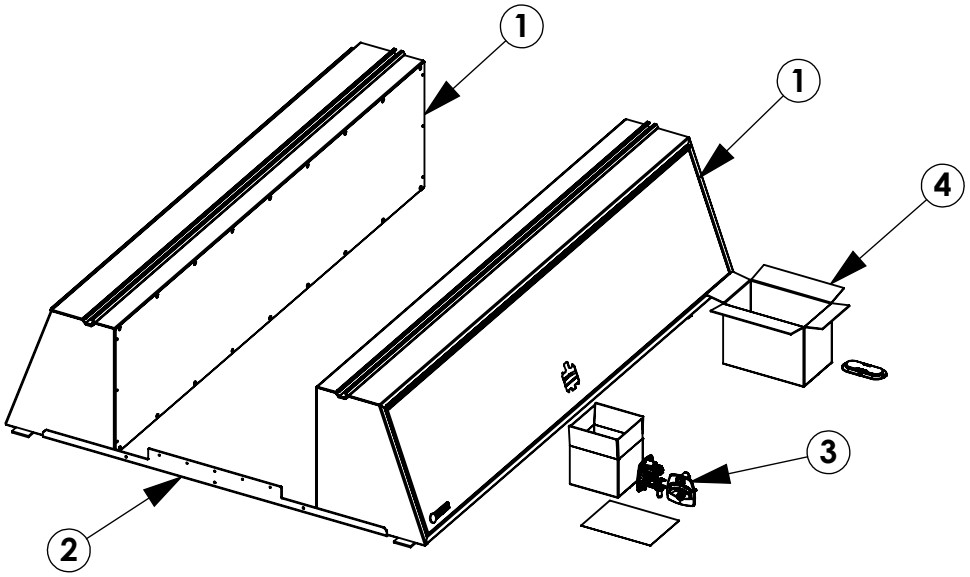

INSTR. NUMBER : 83171	PG: 5	REV: A
PART NUMBER : SEE BOM		
PART DESC. : TSBX KIT WITHOUT GUARD		

TSBX-6G1E-NG

ITEM NO.	PART NUMBER	DESCRIPTION	QTY.
1	TS-BOX6	TOP SIDE BOX, 6' ASSEMBLY	2
2	TS-BK6G1	TSBX, RAM 6' CAB BRK KIT	1
3	81246	KIT,TOPSIDER,6FT,FULL	1
4	81248	CHMSL KIT TSBX	1

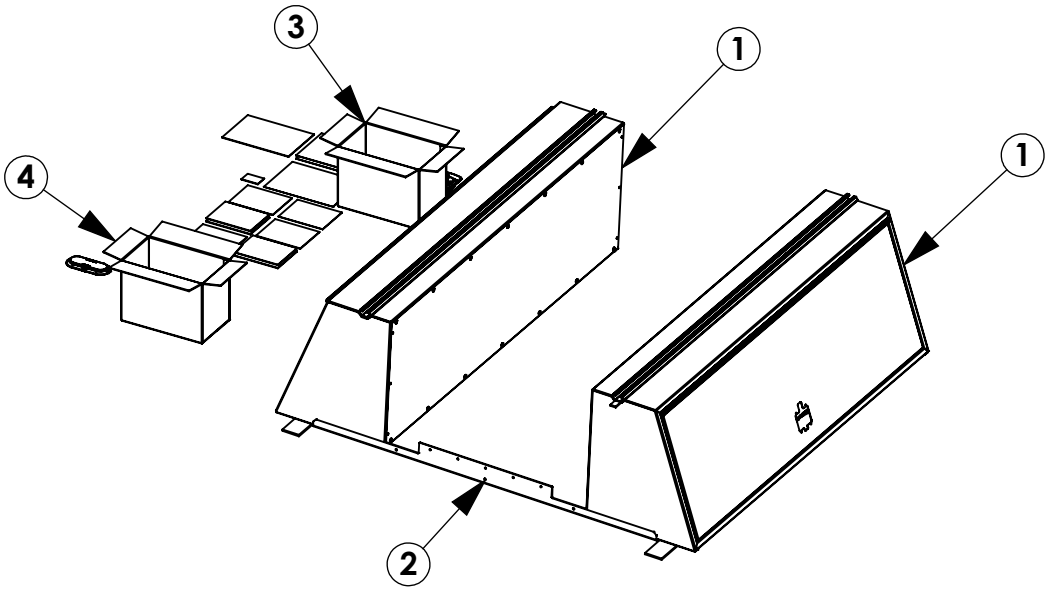

TSBX-8G1E-NG

ITEM NO.	PART NUMBER	DESCRIPTION	QTY.
1	TS-BOX8	TOP SIDE BOX, 8' ASSEMBLY	2
2	TS-BKG2	TSBX, GM 8' BED BRKT KIT	1
3	81244	KIT,TOPSIDER,8FT,ELOCK W/LIGHTING	1
4	81248	KIT, TAILGATE CHMSL	1

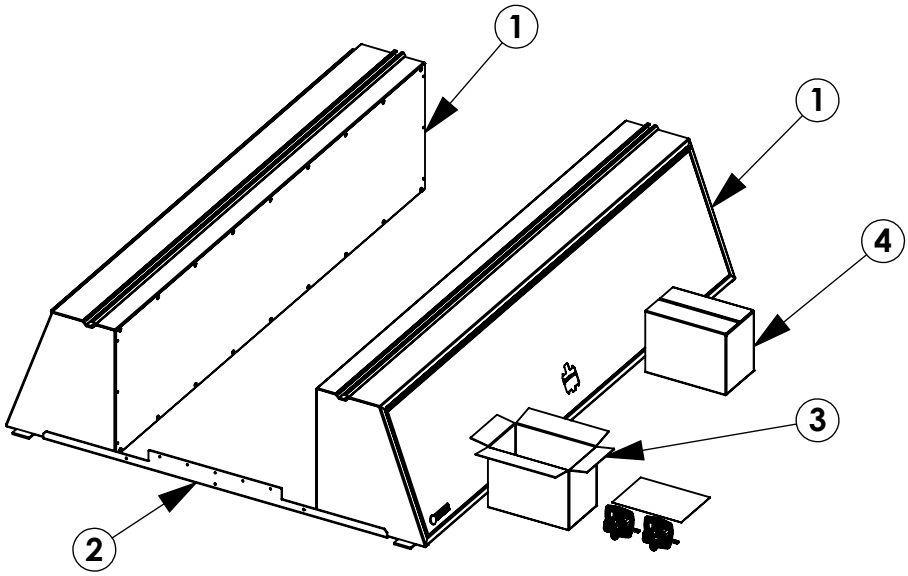

INSTR. NUMBER : 83171	PG: 6	REV: A
PART NUMBER : SEE BOM		
PART DESC. : TSBX KIT WITHOUT GUARD		

TSBX-6G1M-NG

ITEM NO.	PART NUMBER	DESCRIPTION	QTY.
1	TS-BOX6	TOP SIDE BOX, 6' ASSEMBLY	2
2	TS-BK6G1	TSBX, RAM 6' CAB BRK KIT	1
3	TMLHK2	TSBX MECHANICAL LOCK HATCH KIT	1
4	81248	CHMSL KIT TSBX	1

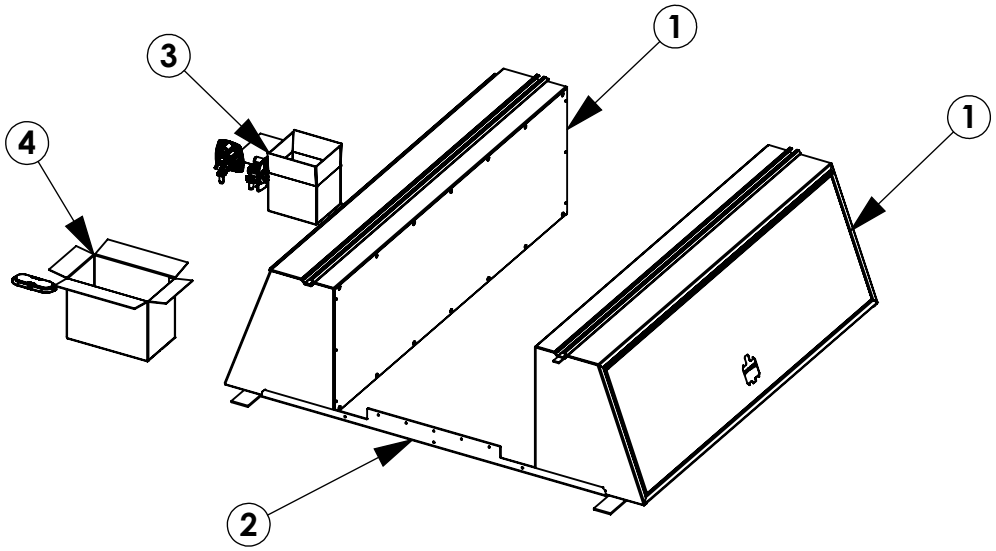

TSBX-8G1M-NG

ITEM NO.	PART NUMBER	DESCRIPTION	QTY.
1	TS-BOX8	TOP SIDE BOX, 8' ASSEMBLY	2
2	TS-BKG2	TSBX, GM 8' BED BRKT KIT	1
3	TMLHK2	TSBX MECHANICAL LOCK HATCH KIT	1
4	81248	KIT, TAILGATE CHMSL	1

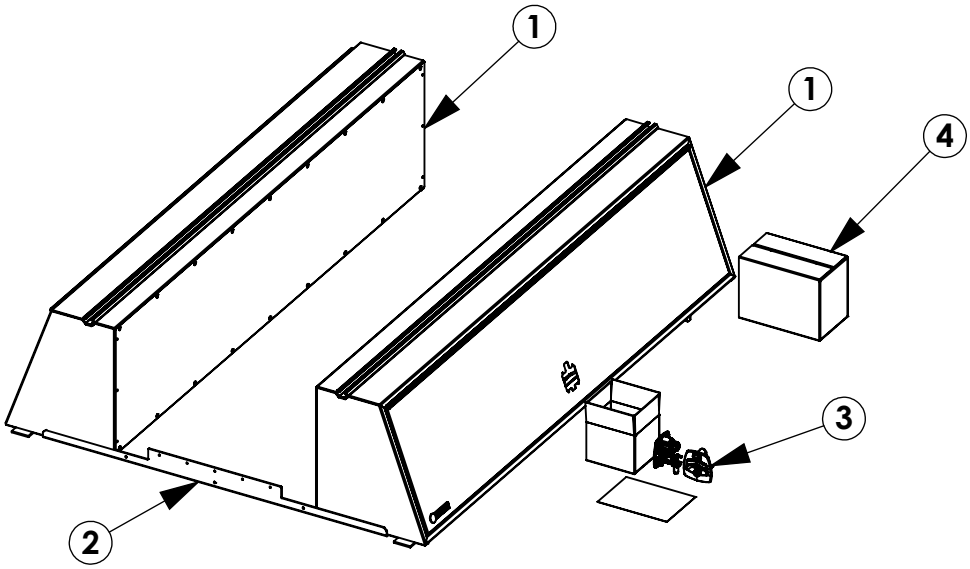

INSTR. NUMBER : 83171	PG: 7	REV: A
PART NUMBER : SEE BOM		
PART DESC. : TSBX KIT WITHOUT GUARD		

TSBX-6G2E-NE

ITEM NO.	PART NUMBER	DESCRIPTION	QTY.
1	TS-BOX6	TOP SIDE BOX, 6' ASSEMBLY	2
2	TS-BK6G2	TSBX, RAM 6' CAB BRK KIT	1
3	81246	KIT,TOPSIDER,6FT,FULL	1
4	81248	CHMSL KIT TSBX	1

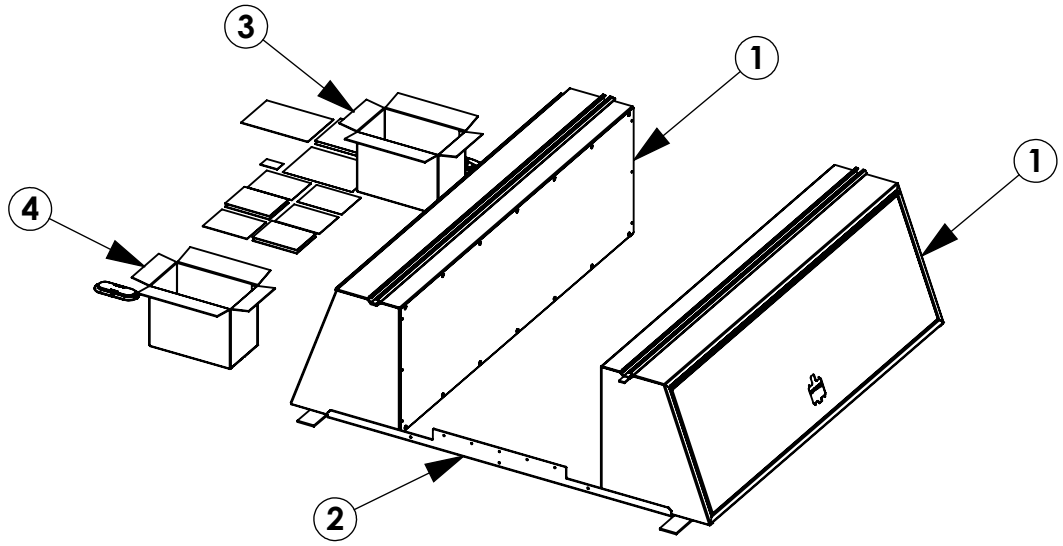

TSBX-8G2E-NG

ITEM NO.	PART NUMBER	DESCRIPTION	QTY.
1	TS-BOX8	TOP SIDE BOX, 8' ASSEMBLY	2
2	TS-BKG2	TSBX, GM 8' BED BRKT KIT	1
3	81244	KIT,TOPSIDER,8FT,ELOCK W/LIGHTING	1
4	81248	CHMSL KIT TSBX	1

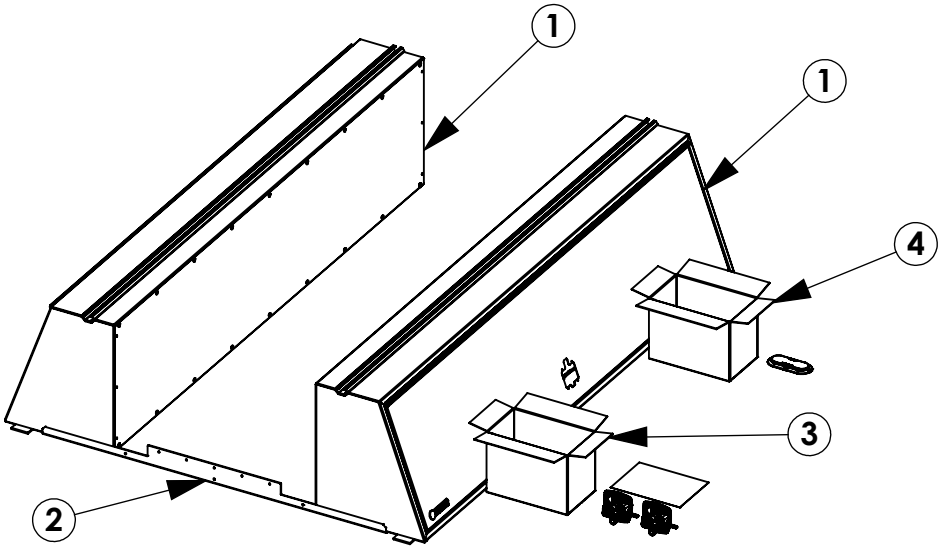

INSTR. NUMBER : 83171	PG: 8	REV: A
PART NUMBER : SEE BOM		
PART DESC. : TSBX KIT WITHOUT GUARD		

TSBX-6G2M-NG

ITEM NO.	PART NUMBER	DESCRIPTION	QTY.
1	TS-BOX6	TOP SIDE BOX, 6' ASSEMBLY	2
2	TS-BK6G2	TSBX, RAM 6' CAB BRK KIT	1
3	TMLHK2	TSBX MECHANICAL LOCK HATCH KIT	1
4	81248	CHMSL KIT TSBX	1

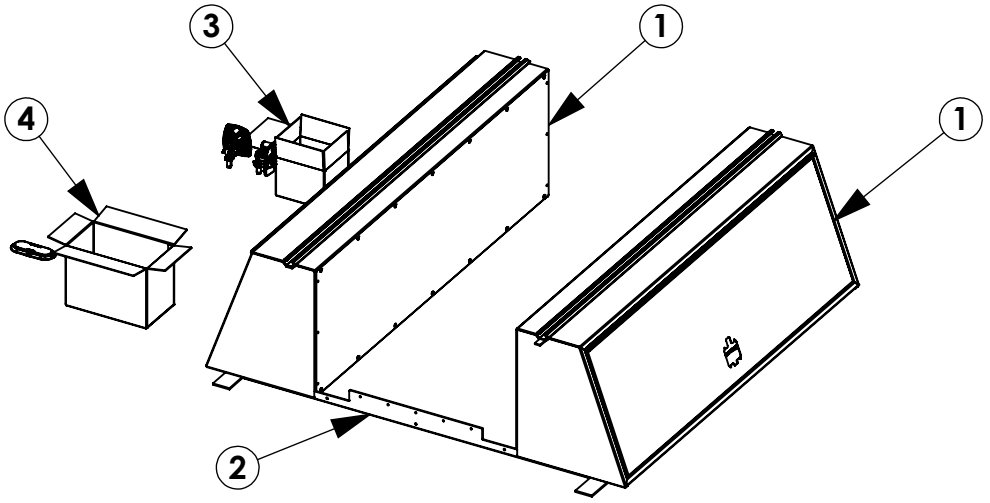

TSBX-8G2M-NG

ITEM NO.	PART NUMBER	DESCRIPTION	QTY.
1	TS-BOX8	TOP SIDE BOX, 8' ASSEMBLY	2
2	TS-BKG2	TSBX, GM 8' BED BRKT KIT	1
3	TMLHK2	TSBX MECHANICAL LOCK HATCH KIT	1
4	81248	KIT, TAILGATE CHMSL	1

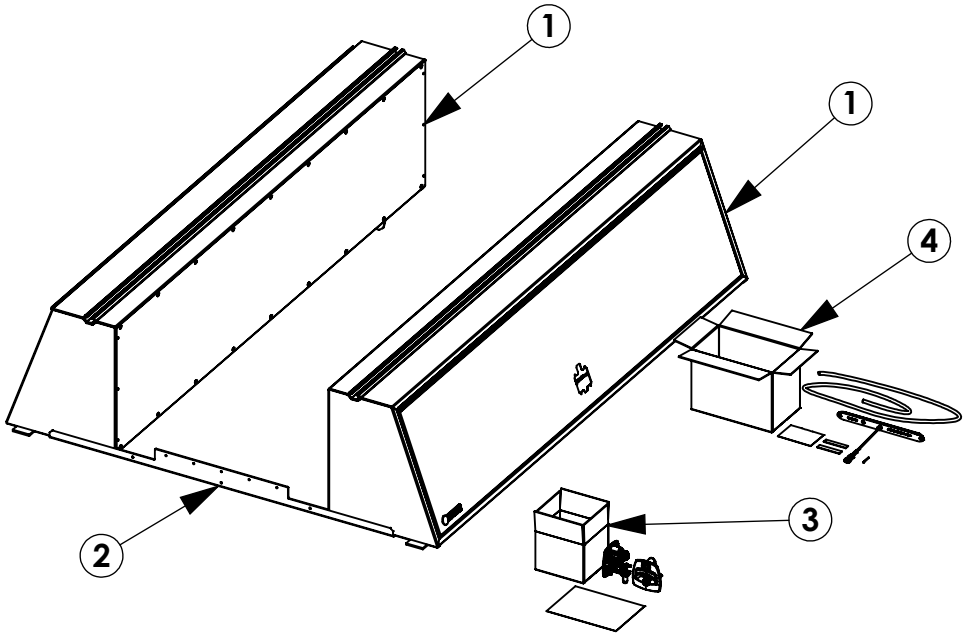

INSTR. NUMBER : 83171	PG: 9	REV: A
PART NUMBER : SEE BOM		
PART DESC. : TSBX KIT WITHOUT GUARD		

TSBX-6R1E-NG

ITEM NO.	PART NUMBER	DESCRIPTION	QTY.
1	TS-BOX6	TOP SIDE BOX, 6' ASSEMBLY	2
2	TS-BK6R1	TSBX, RAM 6' CAB BRK KIT	1
3	81246	KIT,TOPSIDER,6FT,FULL	1
4	81248	CHMSL KIT TSBX	1

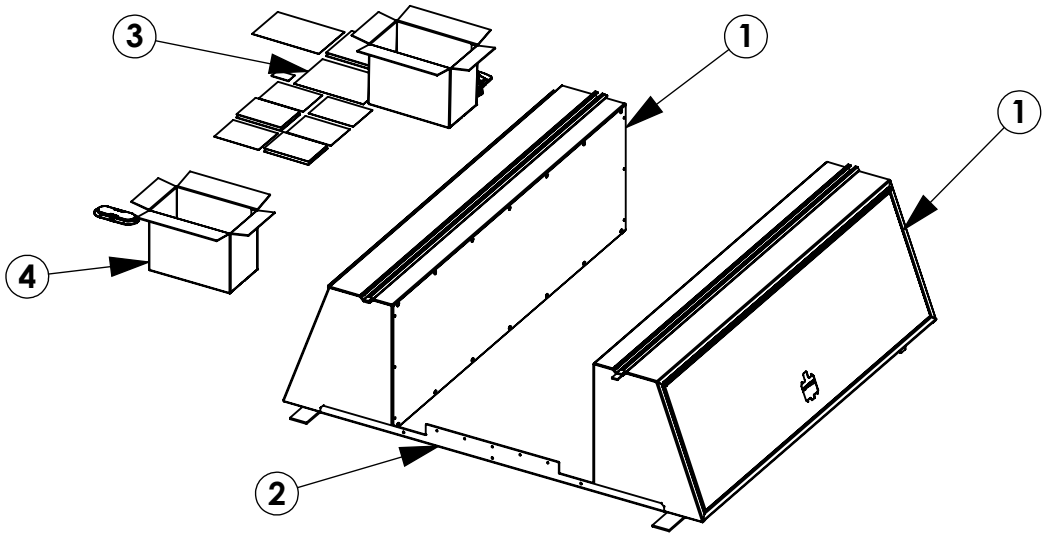

TSBX-8R1E-NG

ITEM NO.	PART NUMBER	DESCRIPTION	QTY.
1	TS-BOX8	TOP SIDE BOX, 8' ASSEMBLY	2
2	TS-BKR2	TSBX, RAM 8' BED BRKT KIT	1
3	81244	KIT,TOPSIDER,8FT,ELOCK W/LIGHTING	1
4	81248	KIT, TAILGATE CHMSL	1

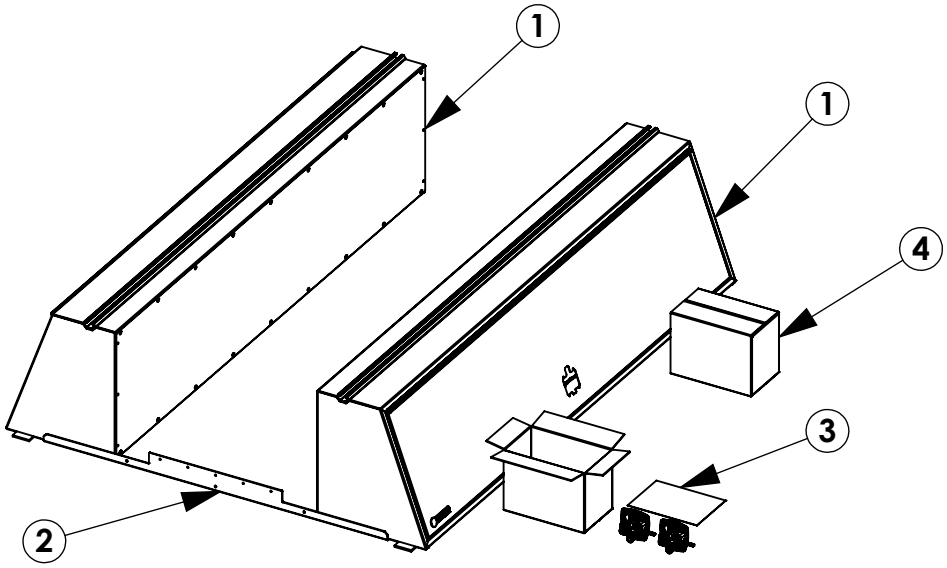

INSTR. NUMBER : 83171	PG: 10	REV: A
PART NUMBER : SEE BOM		
PART DESC. : TSBX KIT WITHOUT GUARD		

TSBX-6R1M-NG

ITEM NO.	PART NUMBER	DESCRIPTION	QTY.
1	TS-BOX6	TOP SIDE BOX, 6' ASSEMBLY	2
2	TS-BK6R1	TSBX, RAM 6' CAB BRK KIT	1
3	TMLHK2	TSBX MECHANICAL LOCK HATCH KIT	1
4	81248	CHMSL KIT TSBX	1

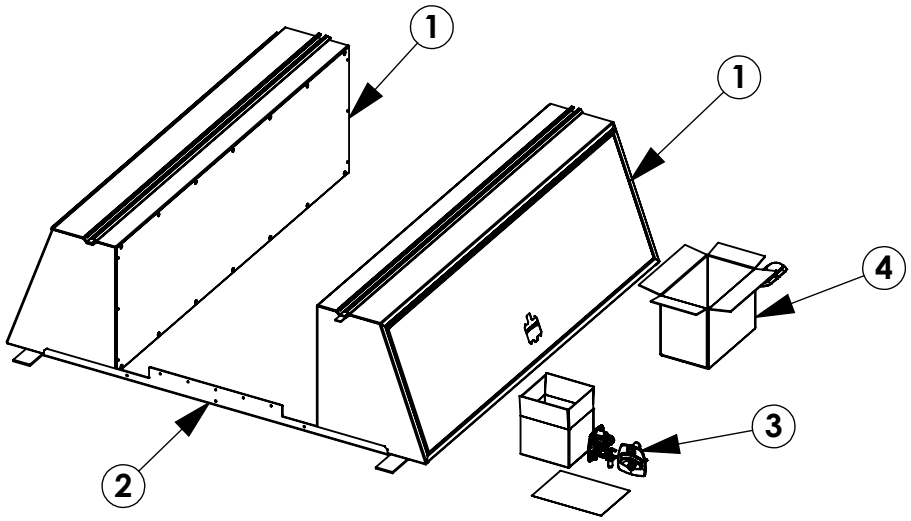

TSBX-8R1M-NG

ITEM NO.	PART NUMBER	DESCRIPTION	QTY.
1	TS-BOX8	TOP SIDE BOX, 8' ASSEMBLY	2
2	TS-BKR2	TSBX, RAM 8' BED BRKT KIT	1
3	TMLHK2	TSBX MECHANICAL LOCK HATCH KIT	1
4	81248	KIT, TAILGATE CHMSL	1

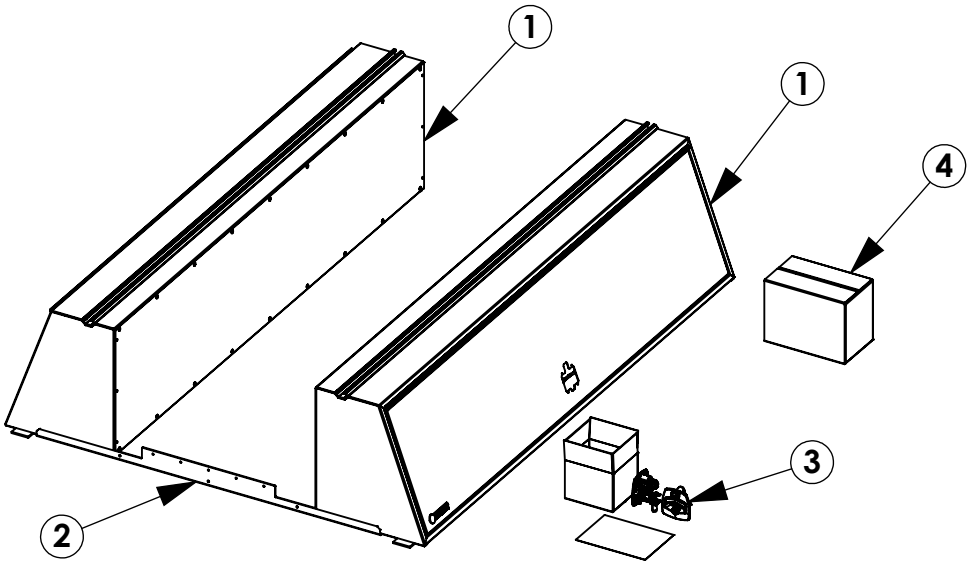

INSTR. NUMBER : 83171	PG: 11	REV: A
PART NUMBER : SEE BOM		
PART DESC. : TSBX KIT WITHOUT GUARD		

TSBX-8R2E-NG

ITEM NO.	PART NUMBER	DESCRIPTION	QTY.
1	TS-BOX8	TOP SIDE BOX, 8' ASSEMBLY	2
2	TS-BKR2	TSBX, RAM 8' BED BRKT KIT	1
3	81244	KIT,TOPSIDER,8FT,ELOCK W/LIGHTING	1
4	81248	CHMSL KIT TSBX	1

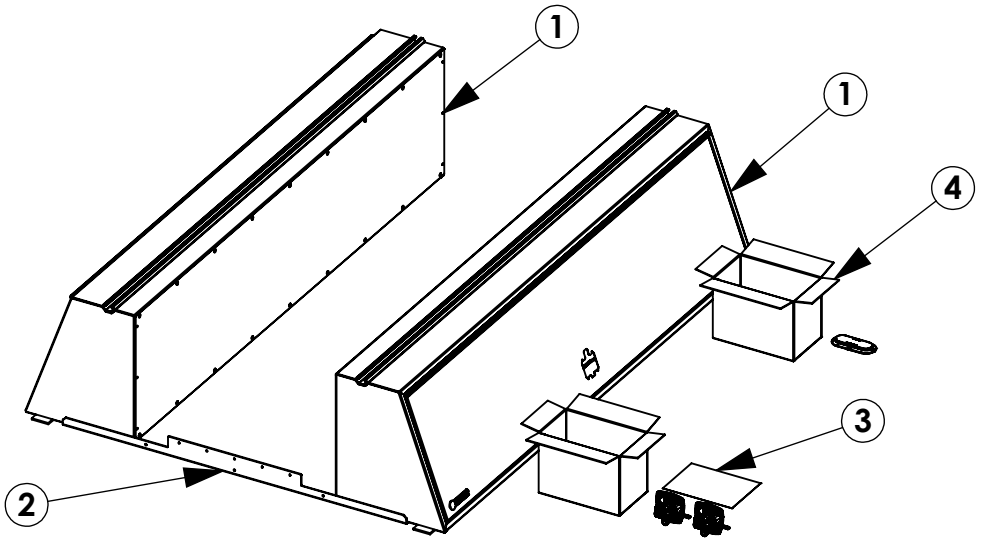

TSBX-8R2M-NG

ITEM NO.	PART NUMBER	DESCRIPTION	QTY.
1	TS-BOX8	TOP SIDE BOX, 8' ASSEMBLY	2
2	TS-BKR2	TSBX, RAM 8' BED BRKT KIT	1
3	TMLHK2	TSBX MECHANICAL LOCK HATCH KIT	1
4	81248	CHMSL KIT TSBX	1

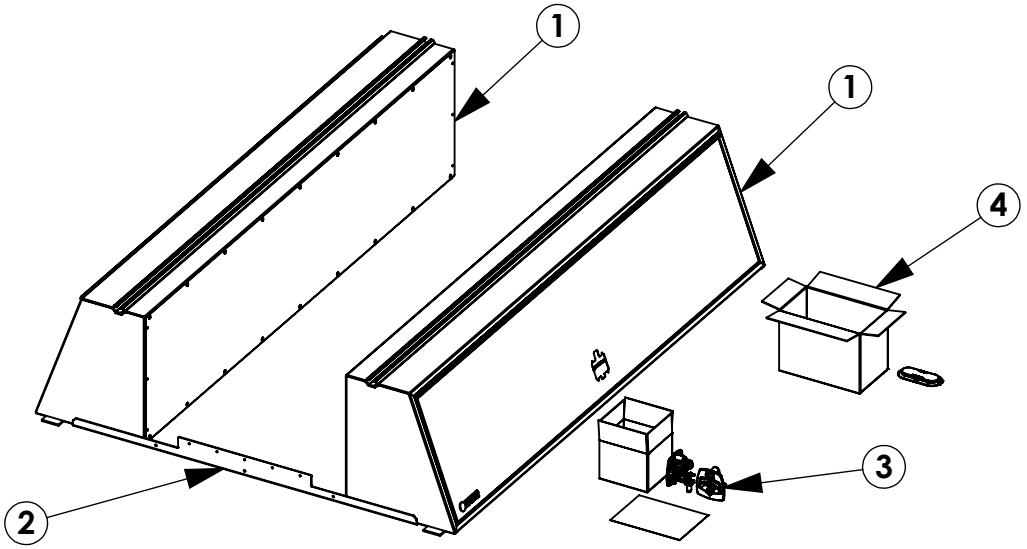

BEST PRACTICES

GET TO KNOW THE VEHICLE - AT THE BEGINNING OF ANY INSTALLATION, CHECK THE LOCATION OF THE FUEL TANK, FUEL LINES, BRAKE LINES, HIGH VOLTAGE BATTERIES AND WIRING HARNESSES TO AVOID INJURY OR PROPERTY DAMAGE FROM TOOL CONTACT.

SEAL ALL EXTERIOR HOLES - ALL INSTALLATION HOLES SHOULD BE SEALED WITH BUTYL TAPE OR SILICON TO PREVENT WATER AND EXHAUST GASES FROM ENTERING THE VEHICLE.

CONTROL DRILL DEPTH - TO AVOID DAMAGE TO THE VEHICLE, USE A DRILL STOP OR CLEARED STEP BIT WHEN DRILLING INSTALLATION HOLES.

ALWAYS ADD PRIMER - WHEN ADDING INSTALLATION HOLES BE SURE TO USE A SELF-ETCHING PRIMER TO PREVENT CORROSION, FASTENER FAILURE AND INJURY.

MOUNTING POINTS MUST HAVE METAL-TO-METAL CONTACT - USE PROVIDED MOUNTING SPACERS TO ACCOMMODATE FOR VEHICLE FEATURES, CARPET OR SUBFLOORS.

PROVIDE CLEARANCE FOR SPACERS - IF THE INSTALLATION VEHICLE CONTAINS A CARPET OR SUBFLOOR, USE A 1-3/16" DIAMETER CARPET CUTTER (P/N: 31183-0) AT ALL MOUNTING LOCATIONS TO OPEN UP ROOM FOR SPACERS.

CHECK SPACER ORIENTATION - BE SURE THAT THE INDENT IN THE SPACER COVERS THE PLUSNUT HEAD; THIS ENSURES THE MOST METAL-TO-METAL CONTACT AND REDUCES VIBRATION.

PLUSNUT INSTALLATION - A PLUSNUT GUN IS RECOMMENDED FOR PLUSNUT INSTALLATION FOR ITS PRODUCTION SPEED. HOWEVER, A PLUSNUT SETTING TOOL CAN ALSO BE USED (P/N: 22200-0).

THRU-BOLT CLEARANCE - WHEN USING A THRU-BOLT AT ANY MOUNTING LOCATION, BE SURE THAT YOUR HOLE HAS 1/16" CLEARANCE.

BEST PRACTICE: ORGANIZE ALL FASTENERS & VERIFY THAT ALL ARE ACCOUNTED FOR

FASTENERS USED

BAG REFERENCE: **BAG80398**

ITEM NO.	PART NUMBER	DESCRIPTION	QTY.
1	FAS0092	SCREW, HEX HD, 5/16-18X1.50 ZN PLATE, G8	4
2	FAS0091	PLUSNUT, 5/16	4
3	FAS0398	BOLT,CRG 5/16-18X1.0 SS	8
4	FAS1025	HHCS FLNG 1/2"-13, 1-1/2" 18-8 SS	2
5	26618-0	SILICONE SEALANT	1
6	FAS0552	WASHER, FLAT, 5/16, SST	8
7	FAS0688	EPDM WASHER	8
8	FAS0940	SCREW, BHTX 1/4-20X1 SS NP	9
9	FAS0584 UNCRIMPED	RIVET, BLIND, DOMEHEAD, 1/4 X .25 GRIP	12
10	FAS0242	SCREW, HEX HD, 5/16-18X1.50 STAINLESS STEEL	10

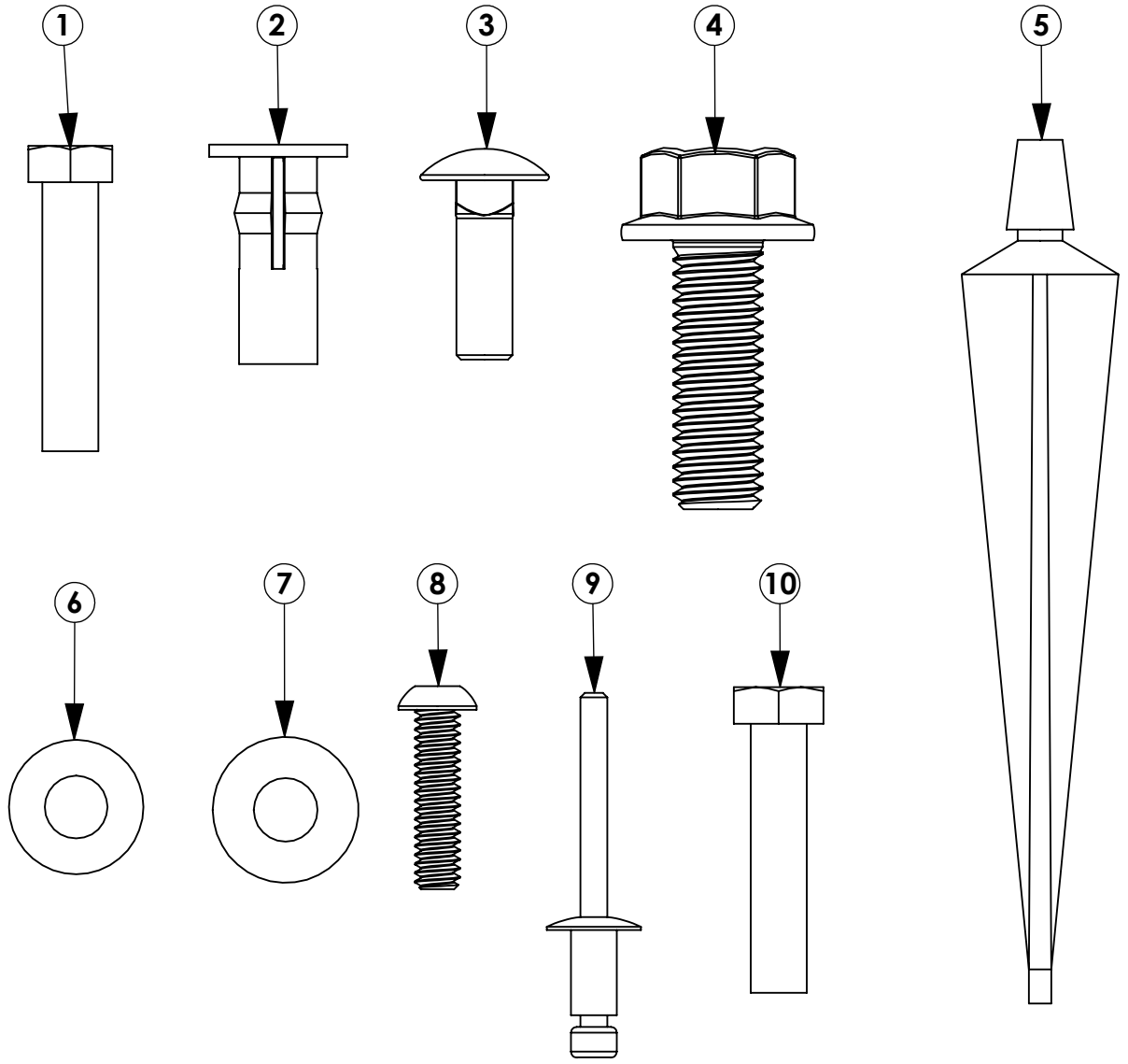

CONTINUE ON NEXT FASTENER PAGE

INTENTIONALLY LEFT BLANK

BEST PRACTICE: ORGANIZE ALL FASTENERS & VERIFY THAT ALL ARE ACCOUNTED FOR

FASTENERS USED

BAG REFERENCE: **BAG80398**

ITEM NO.	PART NUMBER	DESCRIPTION	QTY.
11	FAS1026	NUT, HEX NLK FLG 1/2-13 SS	2
12	FAS0248	NUT, NYLON INSERT LOCK, 5/16-18 SST	18
13	FAS0098	WASHER, LOCK, SPLIT, 5/16, ZINC PLATE	4
14	FAS0086	WASHER,FLAT USS 5/16 ZP	4
15	FAS0055	NUT,HEX NLK FLG 1/4-20 ZP	9
16	FAS0334	WASHER,FLAT 1/2 SS	2
17	FAS0245	WASHER, FLAT, 5/16 HRD, ZN	20
18	FAS0234	WASHER, FLAT, 1/4, SST	9
19	FAS0164	WASHER,FLAT,SAE,5/16,ALUM	10

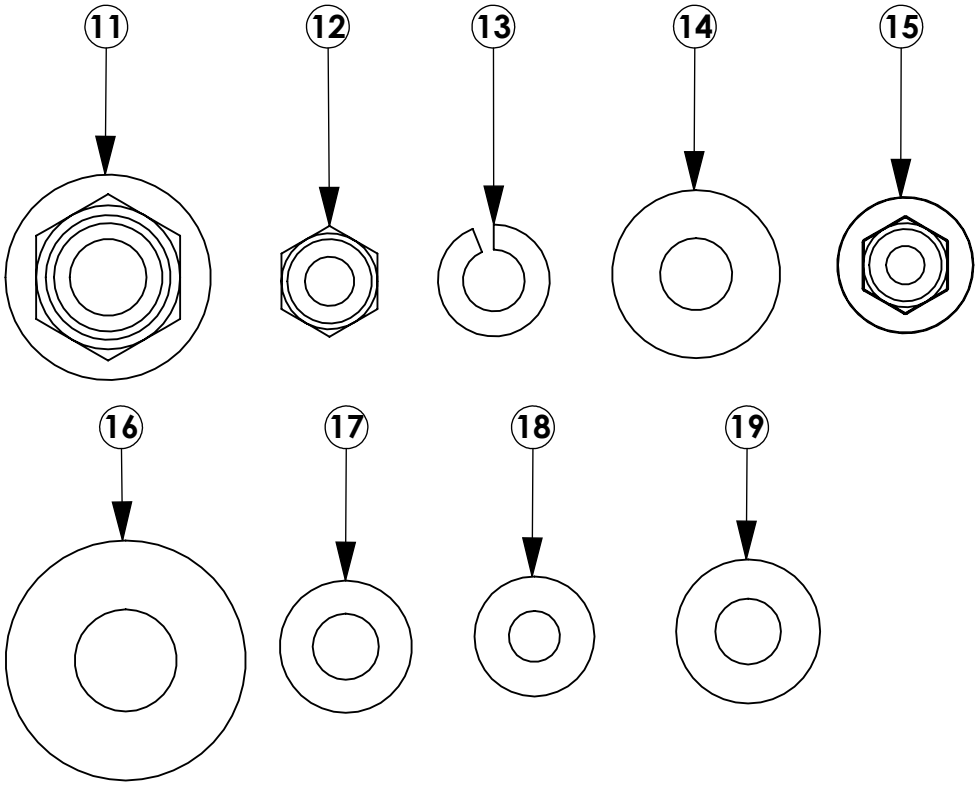

INTENTIONALLY LEFT BLANK

STEP 1 - DETERMIN WHICH BOX WILL BE THE PS AND DS SIDE - THESE BOXES WILL SHIP FROM ASC SYMETRICAL

Step 1.1
IDENTIFY WHAT SIDE OF THE BOX WILL BE FACING FORWARD AND REARWARD ON THE VEHICLE.

Step 1.2
FULLY TIGHTEN FAS0000 AND FAS0000 TO SECURE MECHANICAL AND ELECTRICAL LOCK TO DOOR. SEE LATCH INSTRUCTION FOR MORE DETAIL

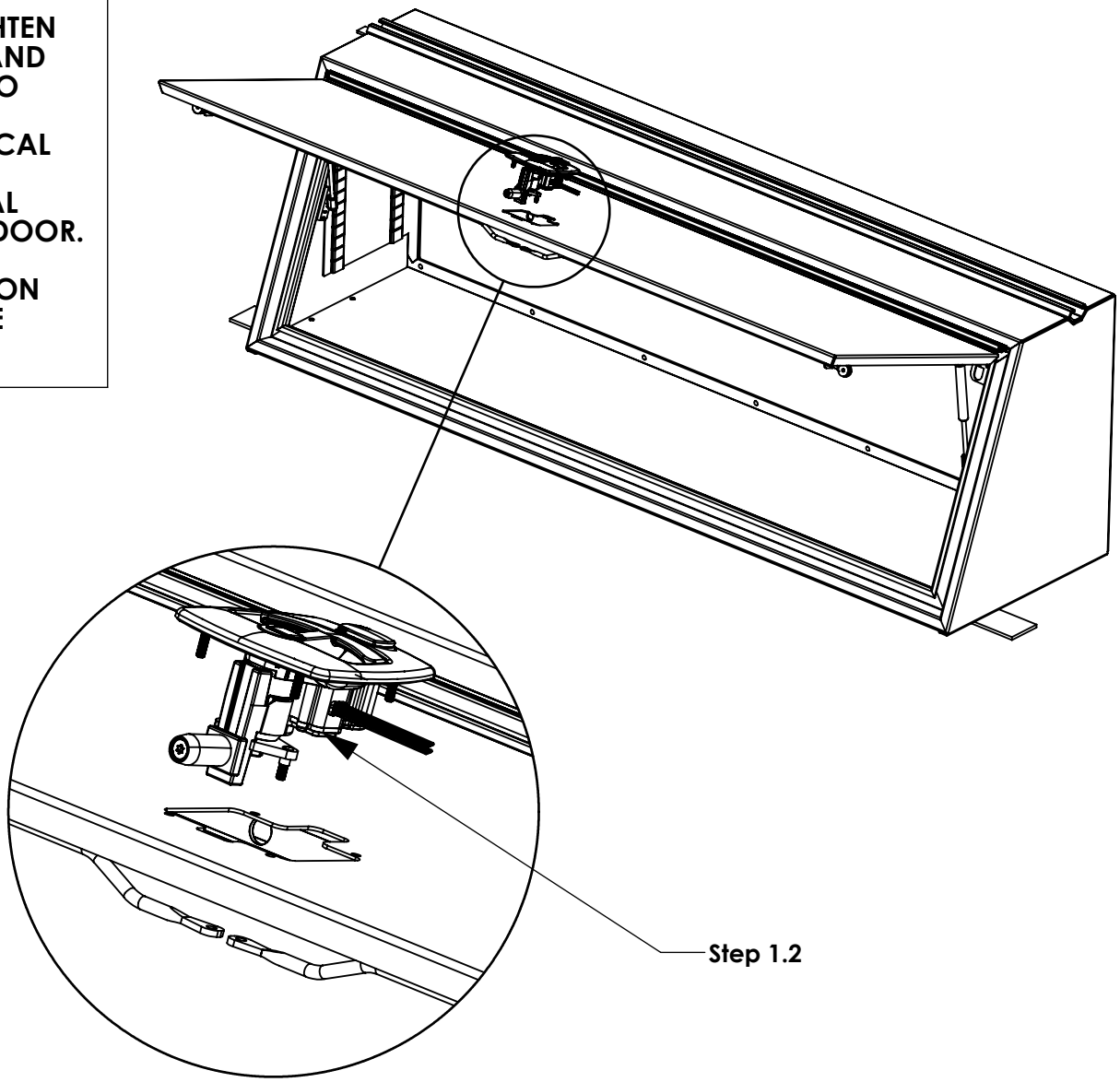

STEP 2.1 - PREP BED (F-150)

Step 2.1.1
LOCATE THE BED SUPPORT BRACKETS IN TS-BK BOX, THESE ARE VEHICLE SPECIFIC.

MAKE SURE THE PARTS YOU HAVE MATCH BOM FOR YOUR VEHICLE.

Step 2.1.2
REMOVE THE TAIL LIGHTS TO GAIN ACESS TO MOUNTING HOLE SHOWN.

DO NOT REINSTALL TAIL LIGHT UNTIL END OF INSTALL

Step 2.1.3
INSTALL REAR BRACKETS. HAND TIGHTEN (4)FAS0092, (4)FAS0098, (4)FAS0086

1/2 WRENCH
1/2 SOCKET

FULLY TIGHTEN AFTER STEP 7.1

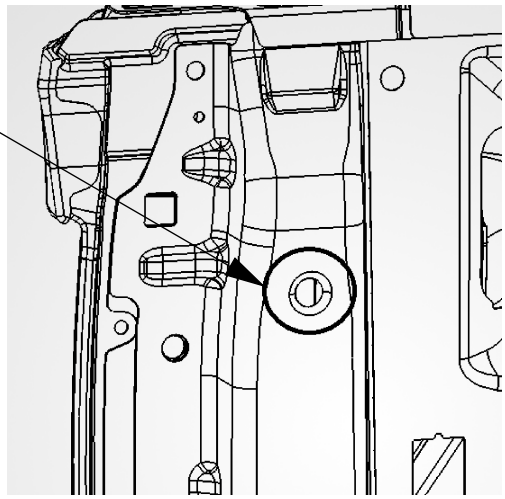

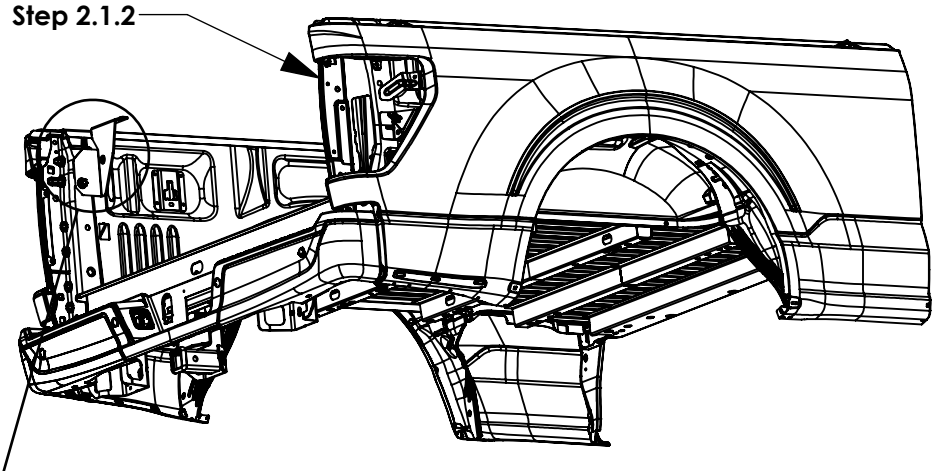

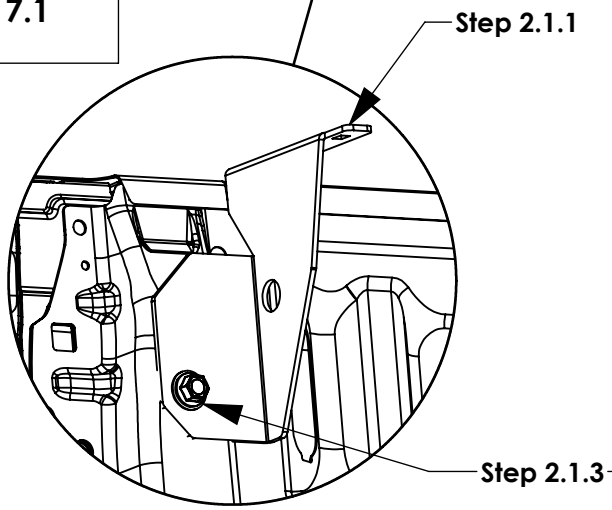

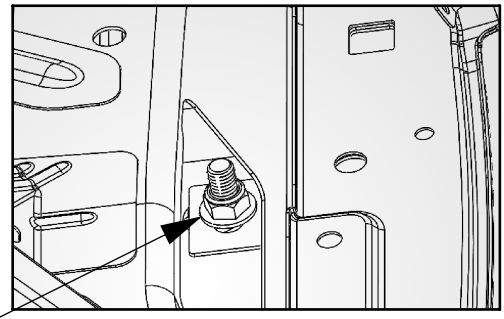

VIEW FROM INSIDE TAIL LIGHT

STEP 2.2 - PREP BED (F-250)

Step 2.2.1
LOCATE THE BED SUPPORT BRACKETS IN TS-BK BOX, THESE ARE VEHICLE SPECIFIC.

MAKE SURE THE PARS YOU HAVE MATCH BOM FOR YOUR VEHICLE.

Step 2.2.2
ALIGN UPPER HOLE ON BED BRACKET TO OEM HOLE IN F-250 BED,

MARK BOTTOM HOLE.

DRILL OUT OEM HOLE TO 1/2"

DRILL MARKED HOLE TO 1/2"

1/2" DRILL BIT
DRILL

Step 2.2.3
SET (4)FAS0091 INTO DRILL HOLES

PLUSNUT TOOL

Step 2.2.4
INSTALL REAR BRACKETS. HAND TIGHTEN (4)FAS0092, (4)FAS0098, (4)FAS0086

1/2 WRENCH
1/2 SOCKET

FULLY TIGHTEN AFTER STEP 7.1

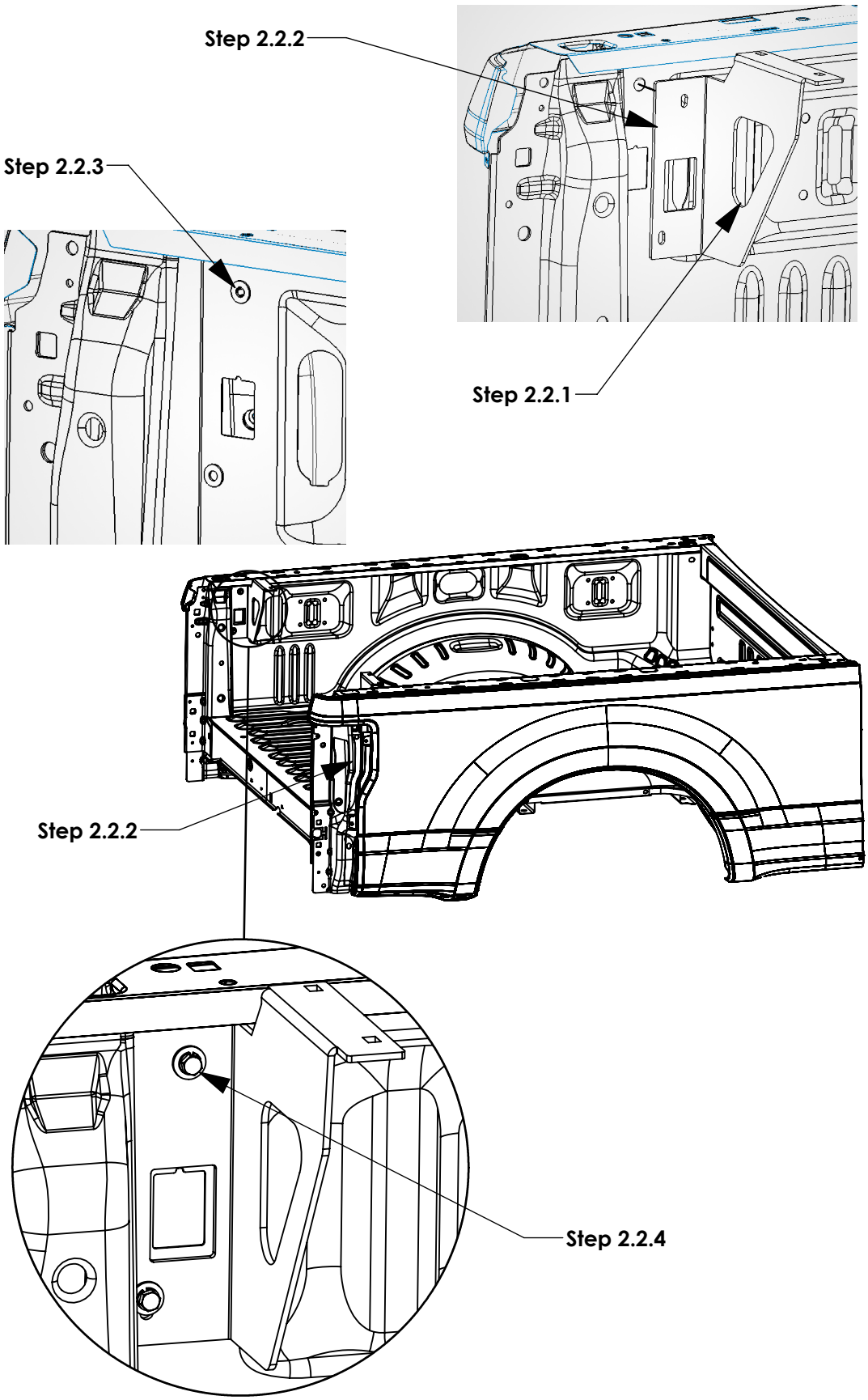

STEP 2.3 - PREP BED (RAM 6 FT)

Step 2.3.1
LOCATE THE BED SUPPORT BRACKETS IN TS-BK BOX, THESE ARE VEHICLE SPECIFIC.

MAKE SURE THE PARS YOU HAVE MATCH BOM FOR YOUR VEHICLE.

Step 2.3.2
FOR RAM VEHICLE, ALIGN HOLE ON BRACKET TO HOLEIN RAM BED DRILL OUT OEM HOLE TO 1/2"

1/2" DRILL BIT
DRILL

Step 2.3.3
SET (4)FAS0091 INTO DRILLED OUT HOLES

PLUSNUT TOOL

Step 2.3.4
INSTALL REAR BRACKETS. HAND TIGHTEN AND FULLY TIGHTEN AT END OF INSTALL PRIOR TO REINSTALLING TAIL LIGHT,

FULLY TIGHTEN AFTER STEP X.X
(2)FAS1025,
(2)FAS1026
(2)FAS0334

1/2 WRENCH
1/2 SOCKET

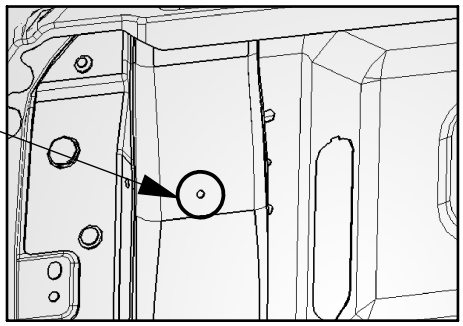

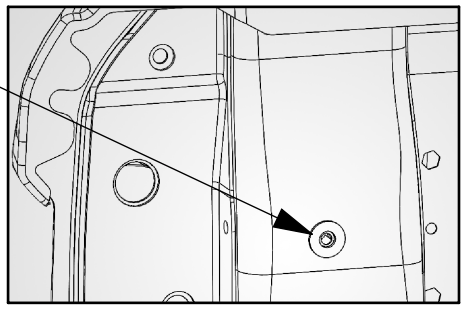

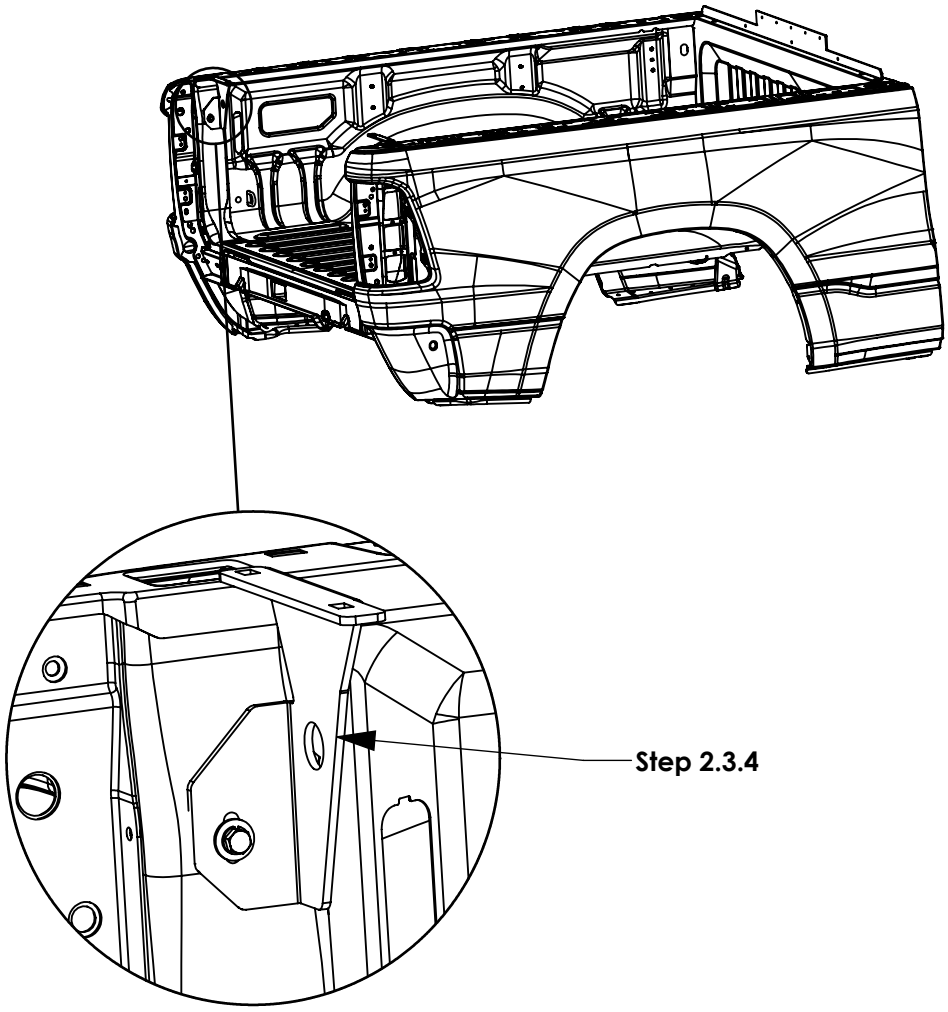

STEP 2.4 - PREP BED (RAM 8 FT)

Step 2.4.1
LOCATE THE BED SUPPORT BRACKETS IN TS-BK BOX, THESE ARE VEHICLE SPECIFIC.

MAKE SURE THE PARS YOU HAVE MATCH BOM FOR YOUR VEHICLE.

Step 2.4.2
FOR RAM VEHICLE, REMOVE TAIL LIGHT TO GAIN ACESS TO MOUNTING HOLES SHOWN

Step 2.4.3
IDENTIFY OEM HOLE AT REAR OF BED (CIRCLED ABOVE) DRILL OUT TO .565" DIA HOLE USING A STEP BIT ON BOTH SIDES OF BED

Step 2.4.4
INSTALL REAR BRACKETS. HAND TIGHTEN AND FULLY TIGHTEN AT END OF INSTALL PRIOR TO REINSTALLING TAIL LIGHT,

FULLY TIGHTEN AFTER STEP X.X
(2)FAS1025,
(2)FAS1026
(2)FAS0334

1/2 WRENCH
1/2 SOCKET

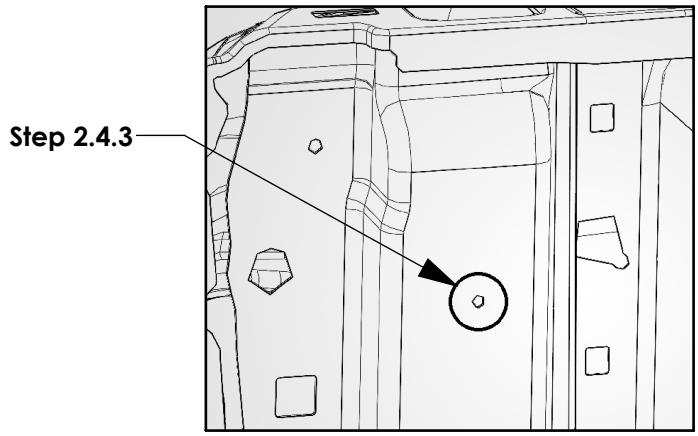

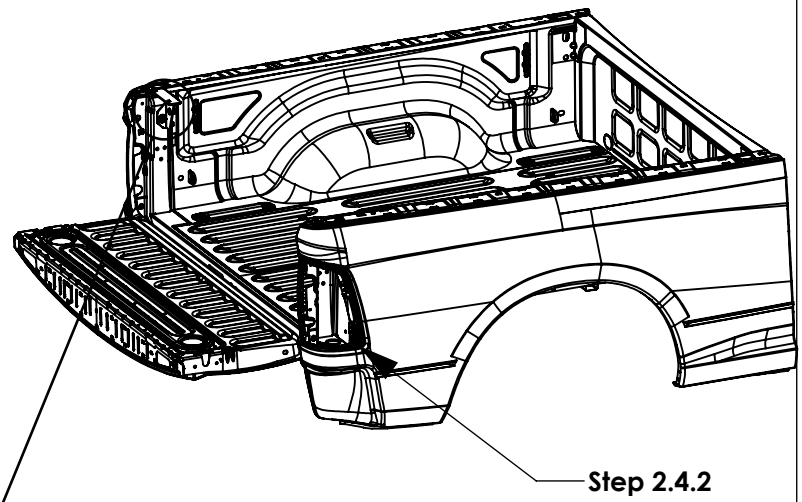

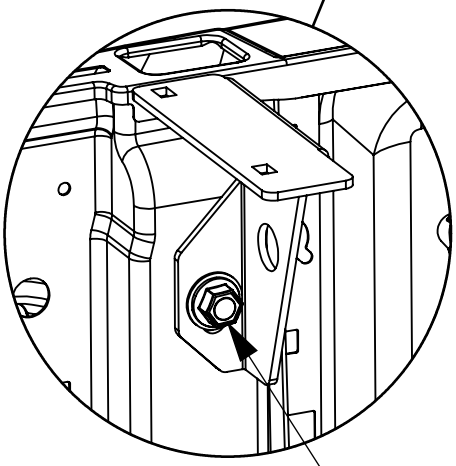

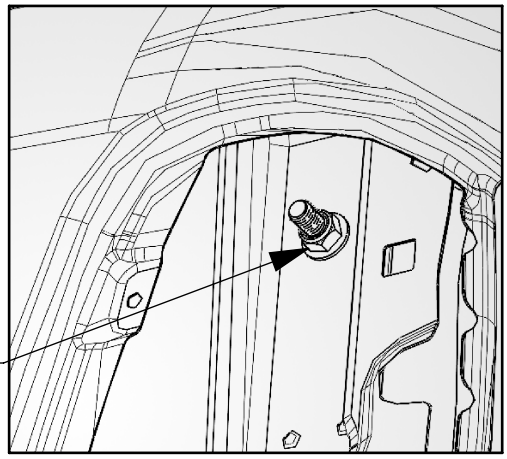

VIEW FROM INSIDE TAIL LIGHT

STEP 2.5 - PREP BED (GM 6FT)

Step 2.5.1
LOCATE THE BED SUPPORT BRACKETS IN TS-BK BOX, THESE ARE VEHICLE SPECIFIC.

MAKE SURE THE PARS YOU HAVE MATCH BOM FOR YOUR VEHICLE.

Step 2.5.2
FOR 1500, ALIGN LEFT HAND HOLE ON BED BRACKET TO HOLE IN GM1500 BED, MARK RIGHT HAND HOLE. DRILL OUT OEM HOLE TO 1/2". DRILL OUT 1/2" HOLE

FOR 2500, ALIGN LEFT HAND HOLE ON BED BRACKET TO HOLE IN GM1500 BED, MARK RIGHT HAND HOLE. DRILL OUT OEM HOLE TO 1/2". DRILL OUT 1/2" HOLE.

1/2" DRILL BIT
DRILL

Step 2.5.3
SET (4)FAS0091 INTO HOLES

PLUSNUT TOOL

Step 2.5.4
INSTALL REAR BRACKETS HAND TIGHTEN (4)FAS0092, (4)FAS0098, (4)FAS0086, & (4)FAS0086

1/2 WRENCH
1/2 SOCKET

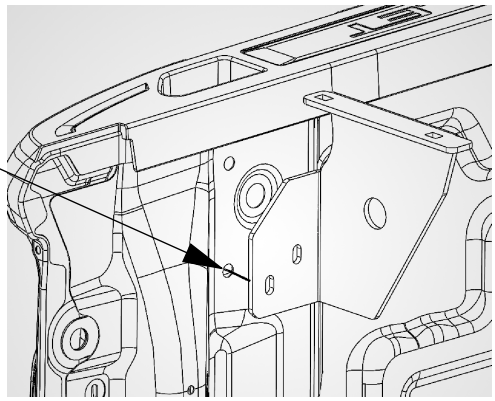

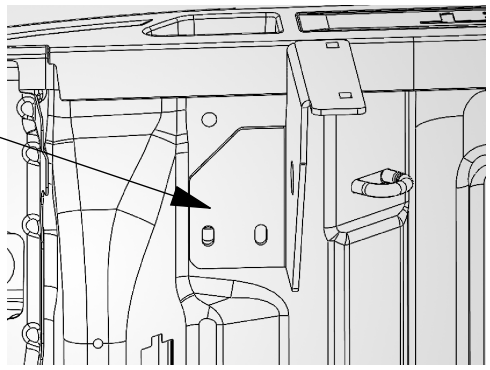

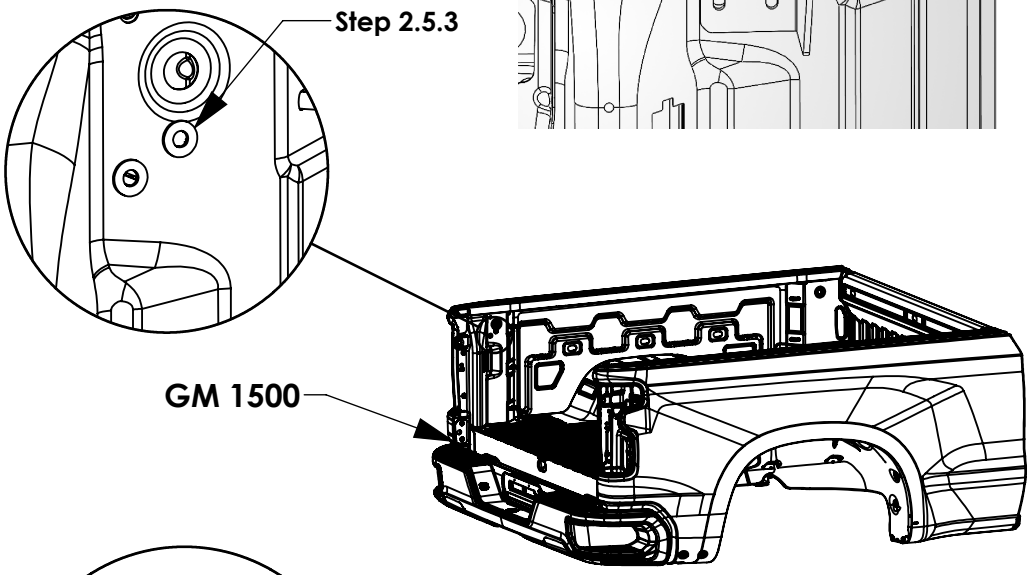

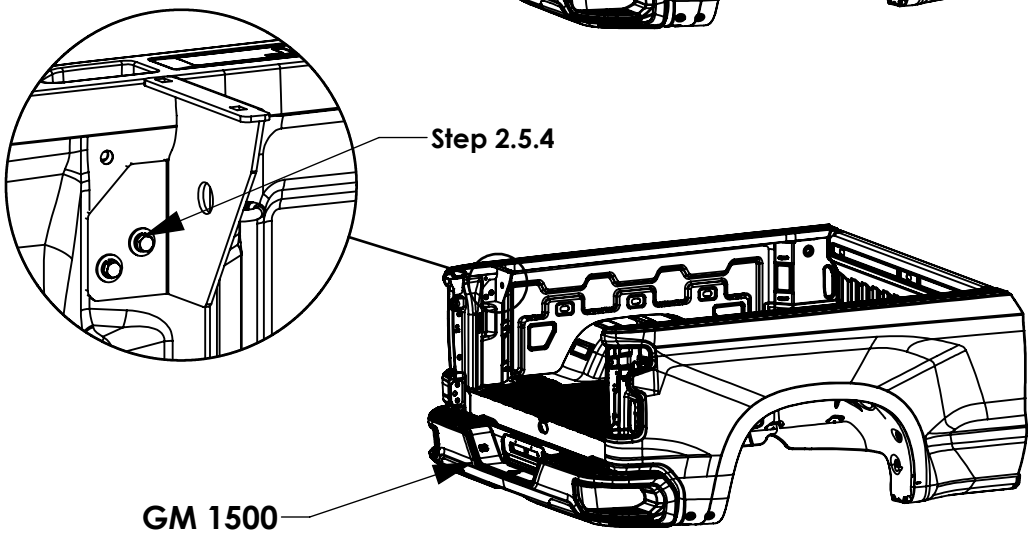

STEP 2.6 - PREP BED (GM 8FT)

Step 2.6.1
LOCATE THE BED SUPPORT BRACKETS IN TS-BK BOX, THESE ARE VEHICLE SPECIFIC.

MAKE SURE THE PARS YOU HAVE MATCH BOM FOR YOUR VEHICLE.

Step 2.6.2
FOR 1500, ALIGN TOP HOLE ON BED BRACKET WITH HOLE SHOWN ON REAR OF TRUCK BED, AND MARK CENTER OF LOWER SLOT.

DRILL OUT OEM HOLE TO 1/2". DRILL OUT 1/2" HOLE

FOR 2500, ALIGN BOTTOM HOLE ON BED BRACKET WITH BOTTOM HOLE SHOWN ON REAR OF TRUC BED. MARK CENTER OF TOP SLOT.

DRILL OUT OEM HOLE TO 1/2". DRILL OUT 1/2" HOLE.

1/2" DRILL BIT
DRILL

Step 2.6.3
SET (4)FAS0091 INTO HOLES

PLUSNUT TOOL

Step 2.6.4
INSTALL REAR BRACKETS HAND TIGHTEN (4)FAS0092, (4)FAS0098, & (4)FAS0086

1/2 WRENCH
1/2 SOCKET

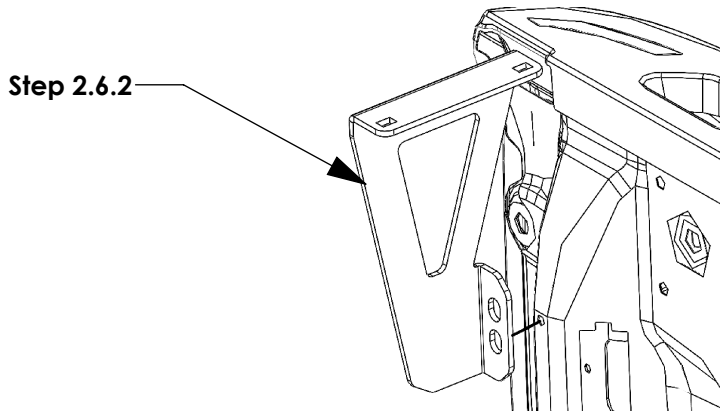

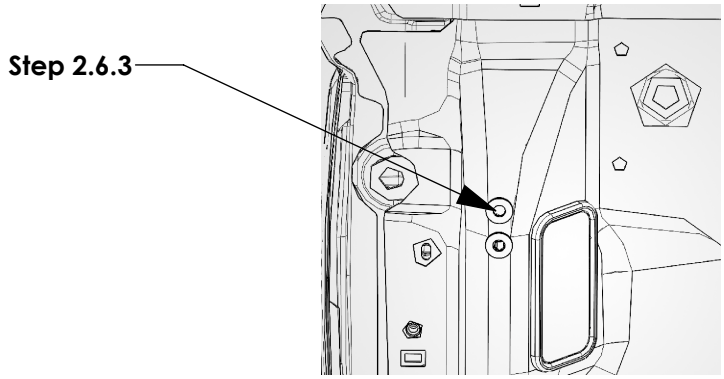

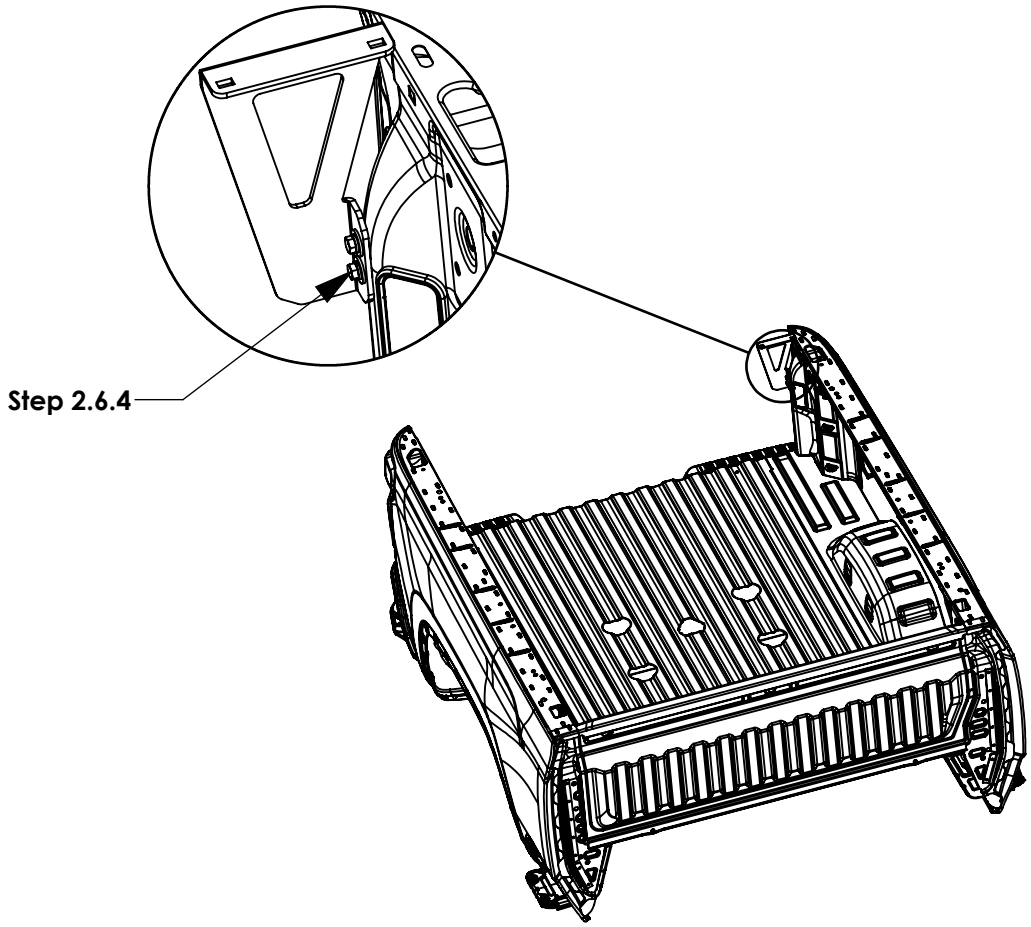

STEP 3 - PREP BED FOR FOAM STRIPS

Step 3.1
APPLY FOAM STRIPS 73632 ON BED RAIL (QTY 4 x FOR WHOLE BED-2 EACH SIDE) START FLUSH WITH THE END OF THE CAB SIDE OF THE BED RAIL.

DO NOT TRIL EXCESS UNTIL FULLY INSTALLED.

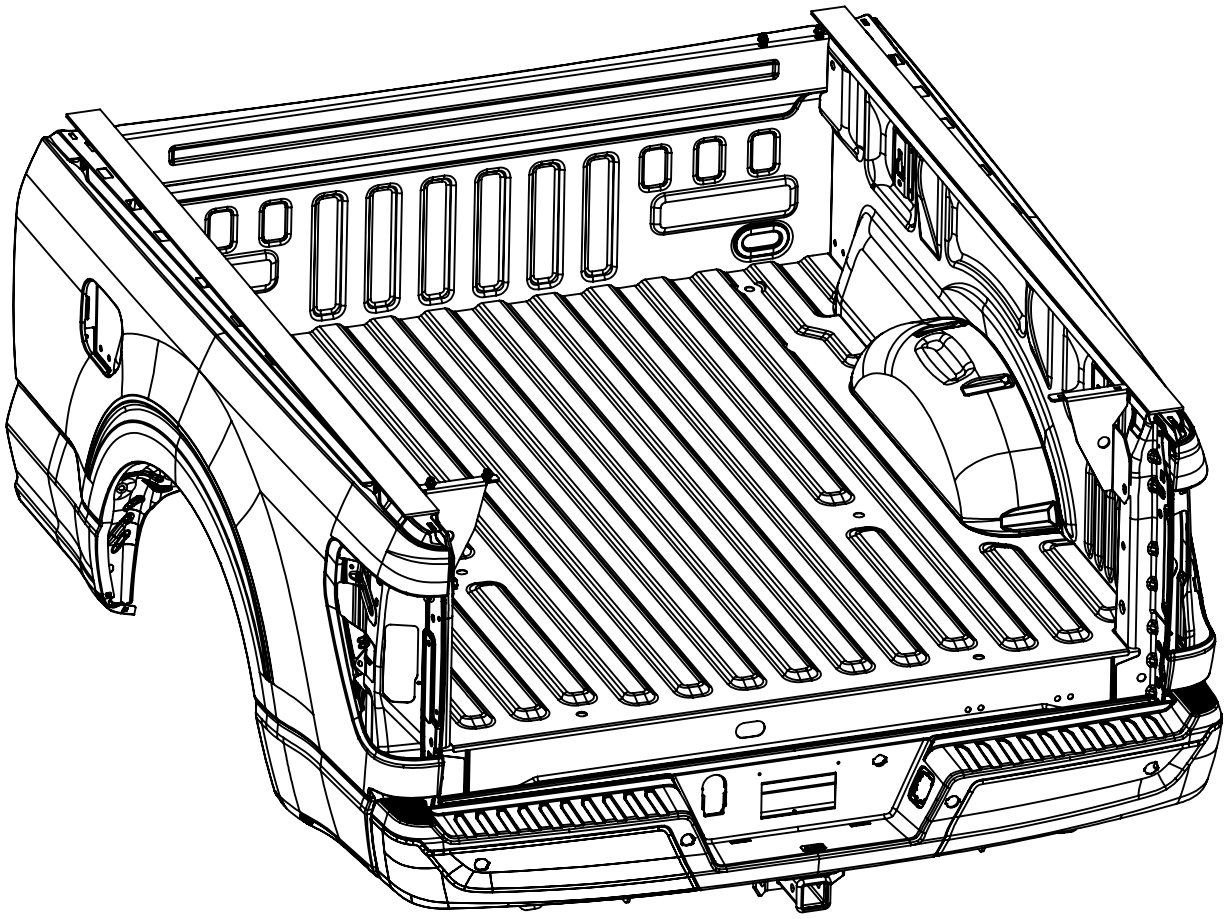

STEP 4 - PLACE BOXES ON BED SO IT OVERHANG THE TAILGATE BY 2-3 FEET - ATTACH BOXES WITH FRONT RAIL SUPPORT

Step 4.1
PLACE BOXES ON BED AS SHOWN, ALIGN 79950-B TO THE BOTTOM OF BOTH BOXES ON THE CAB SIDE OF THE VEHICLE

Step 4.2
LOOSELY ASSEMBLE UNTIL STEP 6, HAND TIGHTEN (4)FAS0398, (4)FAS0248, & (4)FAS0688

1/2 WRENCH
1/2 SOCKET

FULLY TIGHTEN AFTER Step 7.1

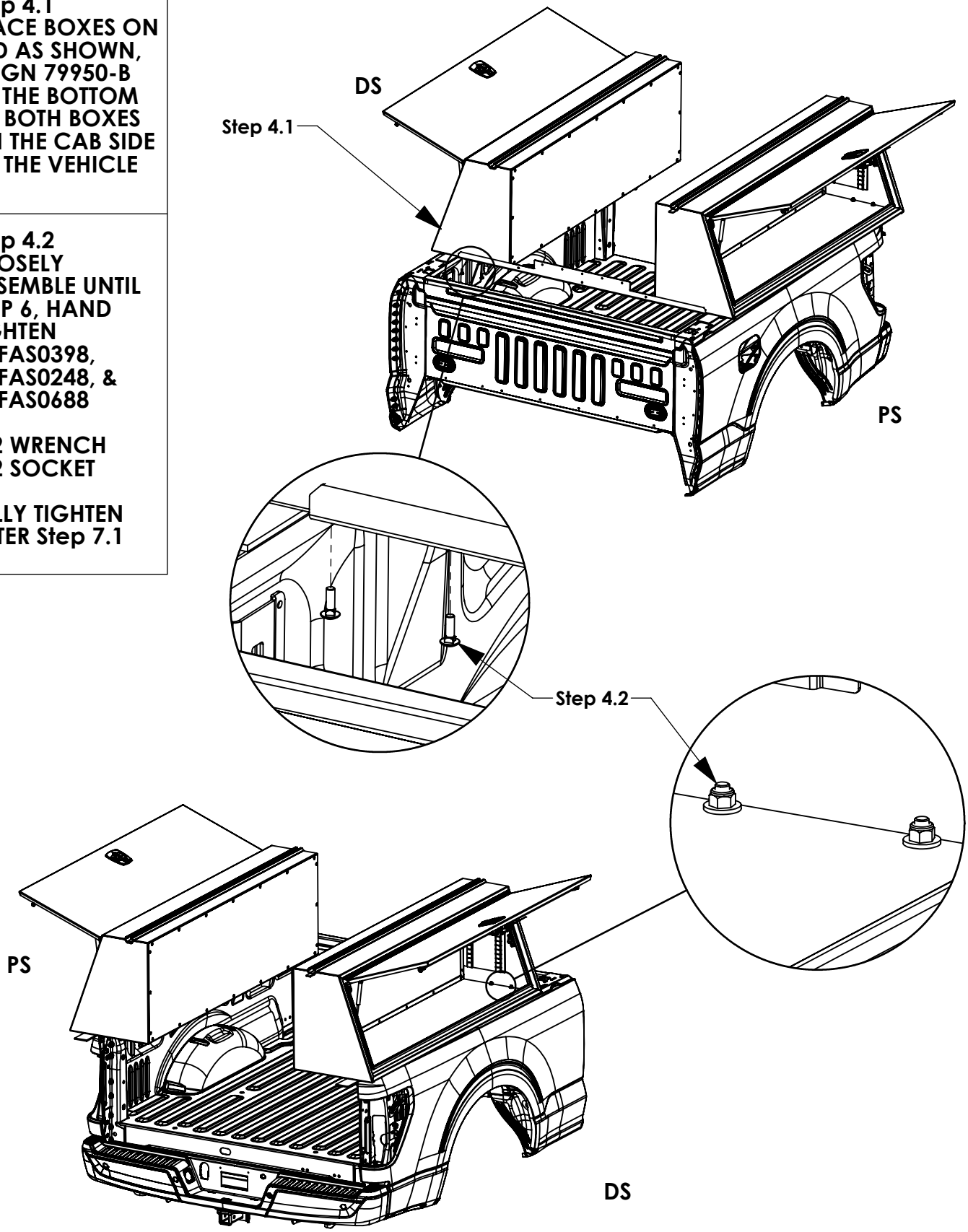

CHECK THAT THE BOXES ARE CENTERED ON VEHICLE

STEP 5 - MEASURE DISTANCE FROM BED RAIL AT CURB SIDE AND ENSURE BOTH SIDES ARE EQUAL

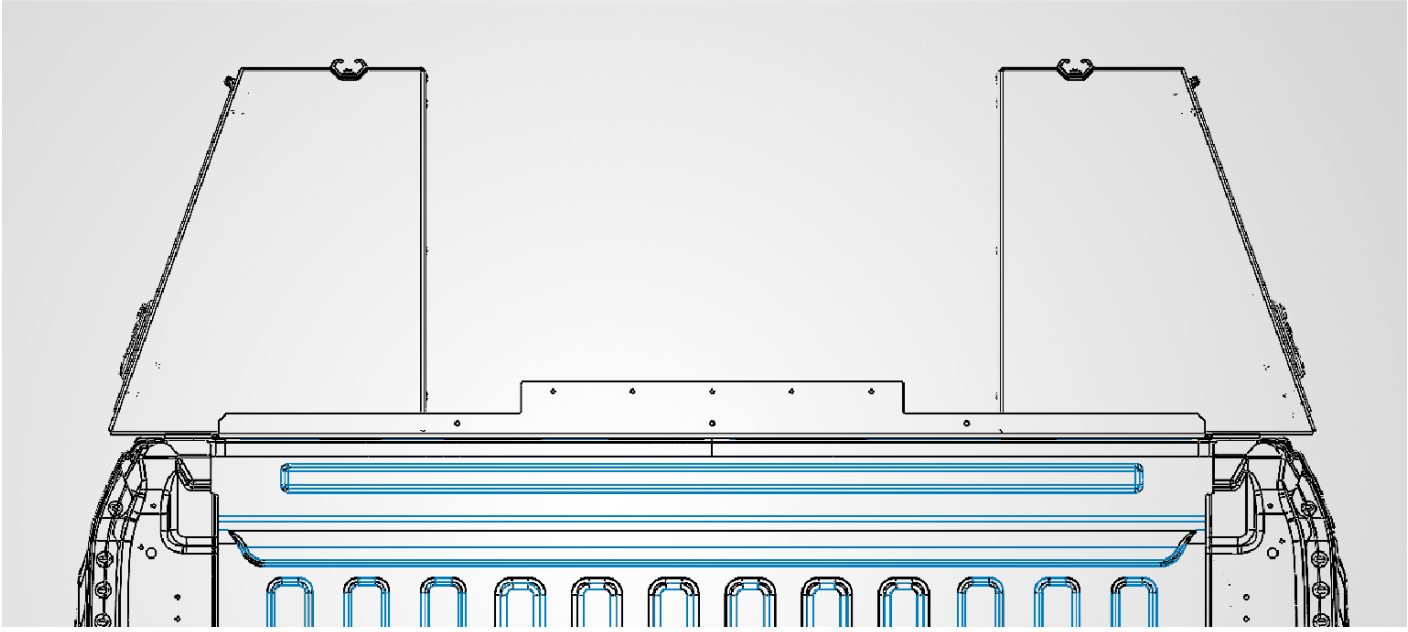

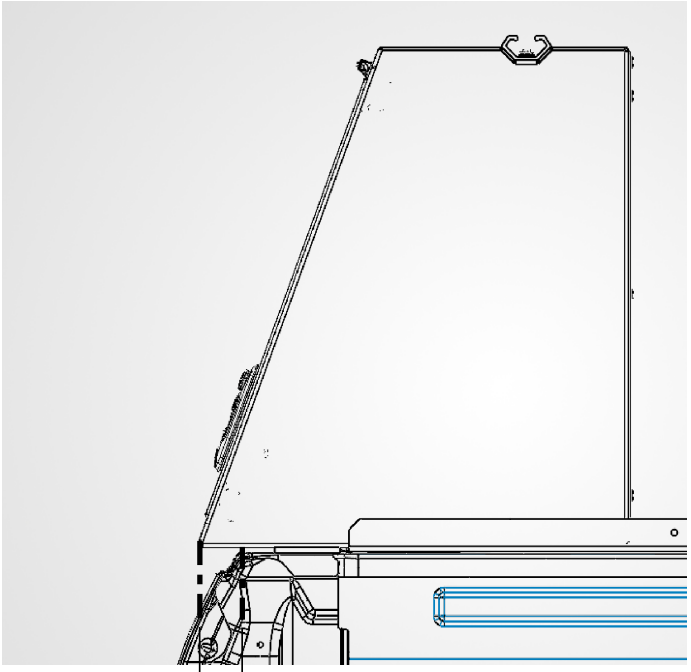

ENSURE THIS DISTANCE IS THE SAME ON BOTH SIDES OF VEHICLE

STEP 6 - INSTALL FASTENERS TO SECURE BOXES TO REAR GUSSET SUPPORTS

Step 6.1
BOLT BOXES TO REAR SUPPORTS FULLY TIGHTEN (4)FAS0248, (4)FAS0018, (4)FAS0688, & (4)FAS0398

9/16 WRENCH
9/16 SOCKET

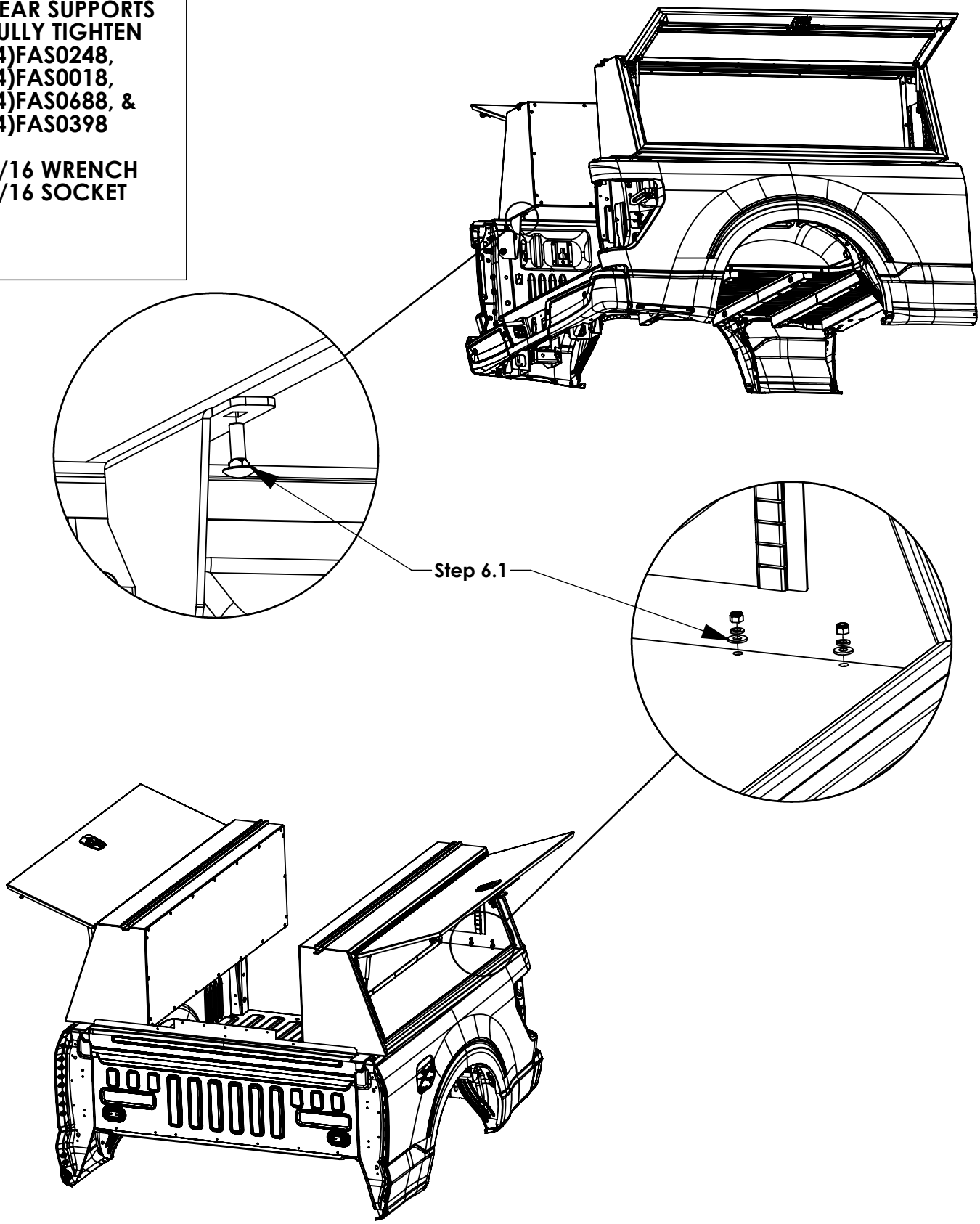

STEP 7 - INSTALL RIVETS AT FRONT AND REAR OF BOXES TO SEAL

Step 7.1
INSTALL RIVETS (12)FAS0584 RIVETS IN FRONT AND REAR OF EACH BOX

RIVET GUN

FULLY TIGHTEN ALL FASTENERS & REINSTALL TAIL LIGHTS AT THIS POINT

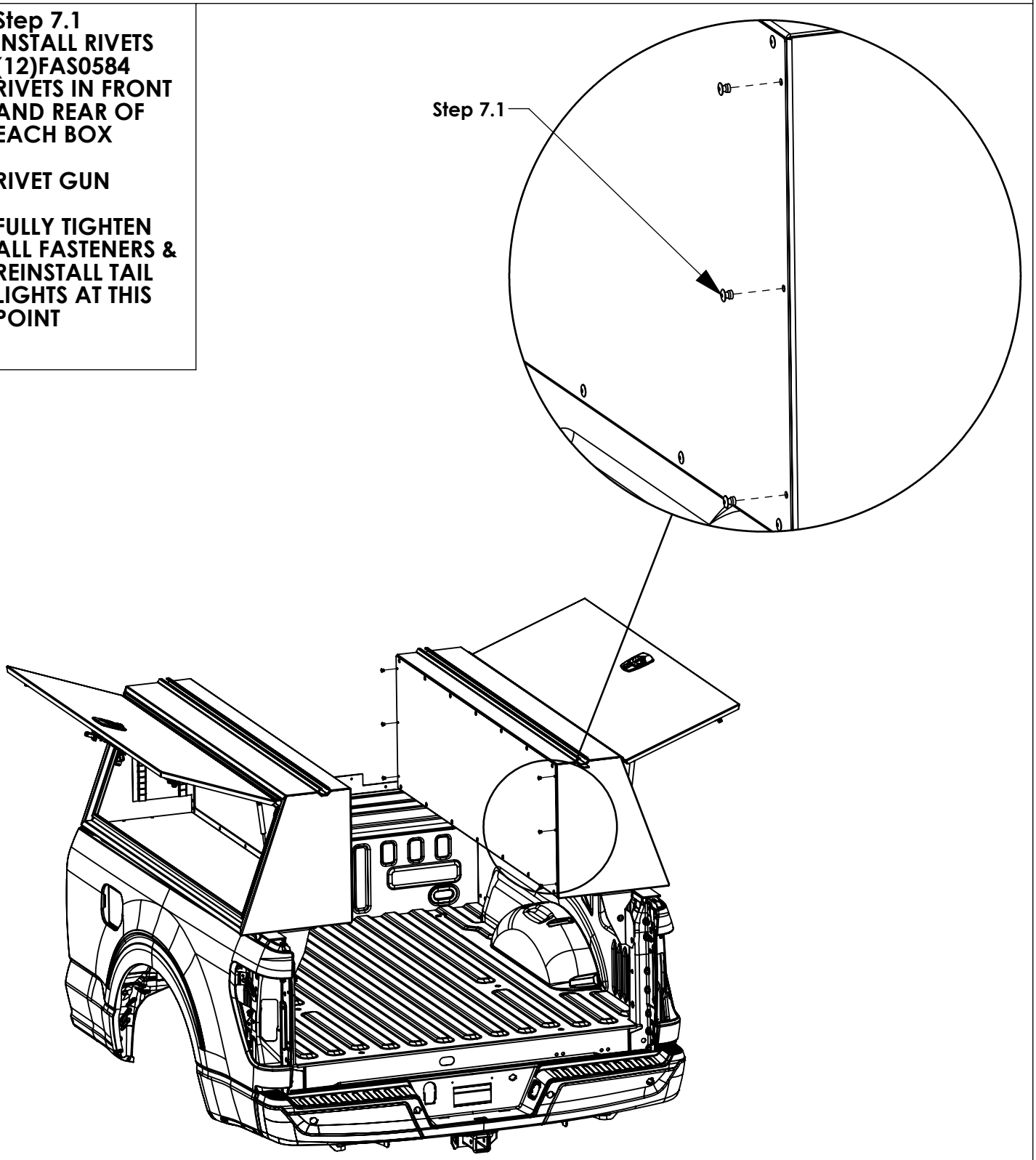

STEP 8 - DRILL BED RAIL MOUNTING HOLES

Step 8.1
IDENTIFY THE CORRECT DRILL JIG FOR THE VEHICLE YOUR REINSTALLING ON

RAM 1/2/3500 - 8'

F-150 - 8'

F-250/350 - 8'

GM 1/2/3500 - 8'

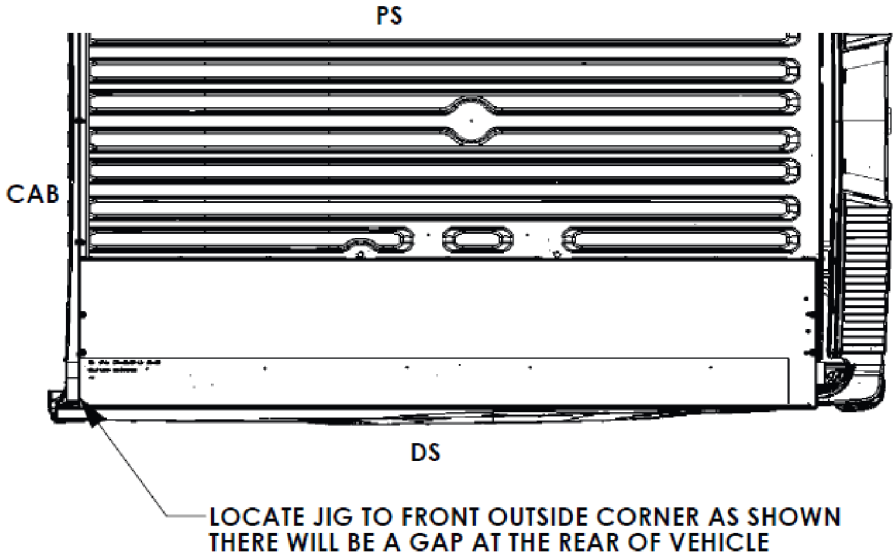

Step 8.2
PLACE JIG IN VEHICLE AS SHOWN. START ON DS

FILP JIG TO MIRROR ON PS

MARK ALL HOLES WITH PAINT PEN

NOTE:
FOR 6' BEDS IGNORE Step 8.1 & 8.2,
USE PAINT PEN TO MARK 4 HOLES EVENLY SPACED IN TOOL BOX AND TRUCK BED RAIL TO DRILL. CONTINUE TO Step 8.3

Step 8.3
USING A STEP BIT OR 3/8 DRILL BIT, DRILL OUT ALL MARKED HOLES ON DS AND PS BED RAIL

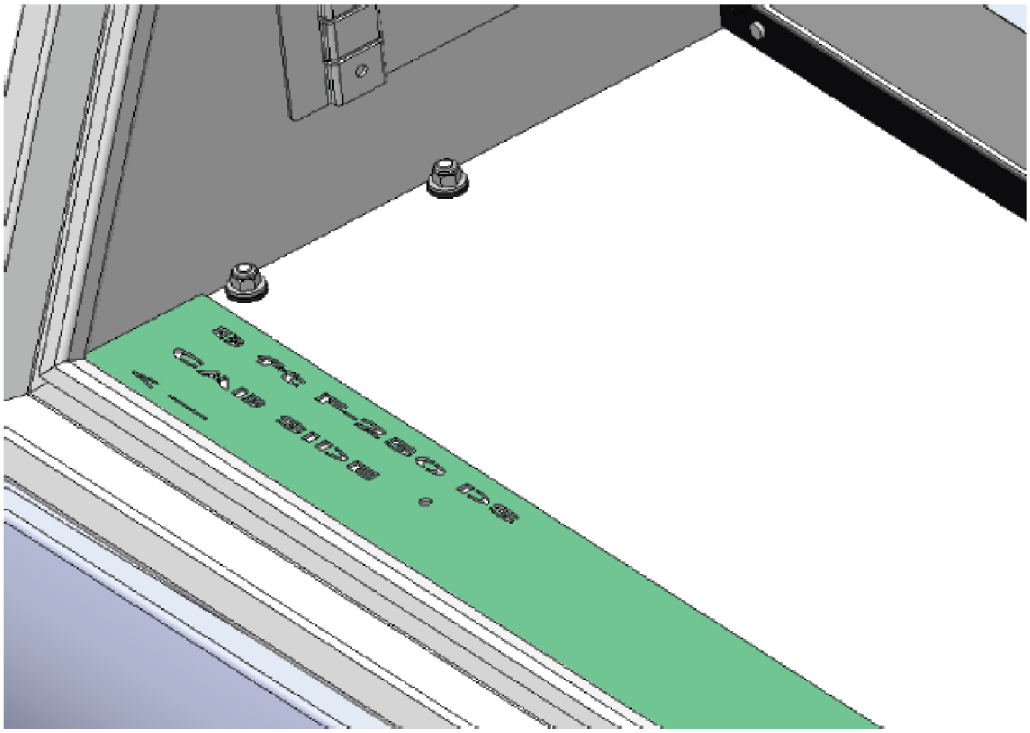

STEP 9 - INSTALL BED RAIL FASTENERS

Step 9.1
REMOVE ANY JIGS, FULLY TIGHTEN FAS0242, FAS0245, FAS0164, & FAS0248 TO SECURE BOXES TO BED RAIL

10 PLACES FOR 8FT BED

8 PLACES FOR 6FT BED

1/2 WRENCH
1/2 SOCKET

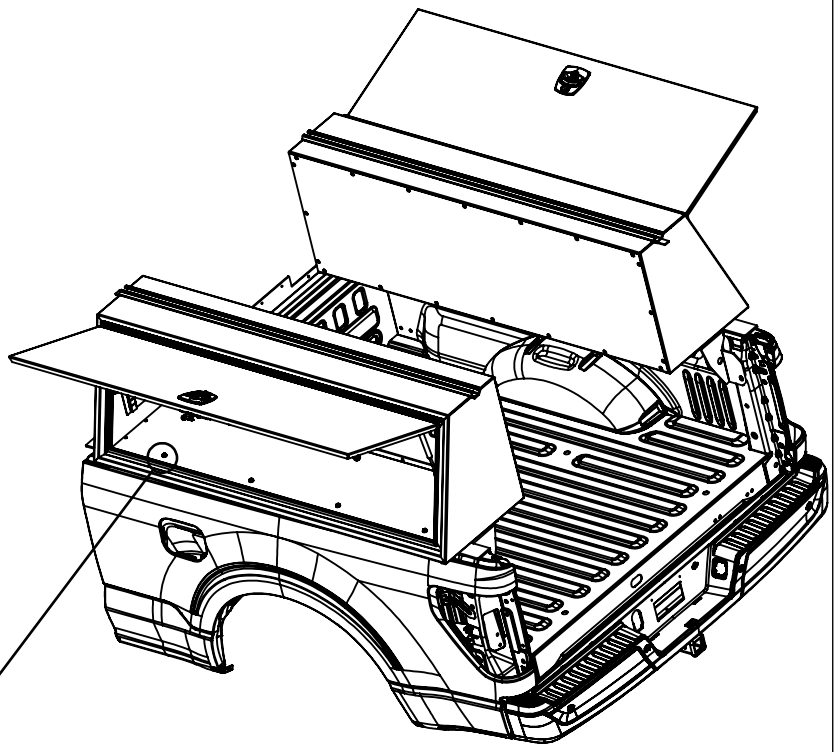

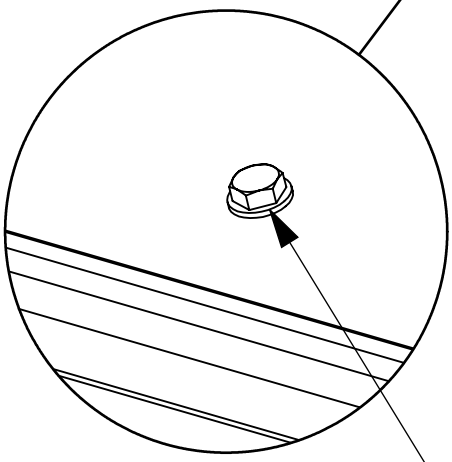

Step 9.1

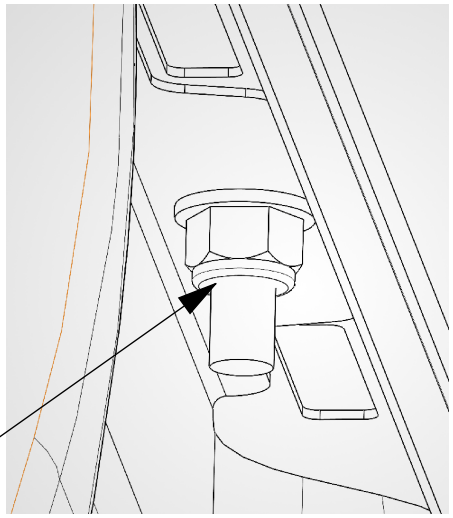

VIEW FROM UNDER RAIL

KIT, TAILGATE CHMSL

CATALOG NUMBER **81248**

PRODUCT APPLICATION

PRODUCT FEATURES

CHMSL kit designed to mount on OEM tailgate for ASCO topsider install.

Kit includes CHMSL light and harness that ties directly into OEM stop lamps.

This kit is compatible with model year 2026 Ford Super Duty.

SEE PAGE 2 FOR APPLICATION NOTES AND ACCESSORIES, OTHER PRODUCTS THAT WORK WITH THIS UNIT.

The information contained in this document is the sole property of ADRIAN STEEL COMPANY. ADRIAN STEEL COMPANY retains the right to modify and/or change the product of its design at any time without prior notification.

CATALOG NUMBER **81248**

PRODUCT APPLICATION

This product is designed to be installed on OEM vehicle tailgate for ASCO topsider box install.

ACCESSORIES THAT WILL WORK WITH THIS PRODUCT

CATALOG NUMBER	*DESCRIPTION*
80384	**TAILGATE CHMSL HARNESS**
71628	**TOPPER LIGHT T17 W/ CONN**
80700	**DASH WARNING LABEL**

SPECIAL APPLICATION NOTES

The information contained in this document is the sole property of ADRIAN STEEL COMPANY. ADRIAN STEEL COMPANY retains the right to modify and/or change the product of its design at any time without prior notification.

Introduction / Comments:

Install Instructions for Tailgate CHMSL Kit

Note:

Read all instructions prior to installation. Review the Adrian Steel **GENERAL PRECAUTIONS PAGES (56638**) before attempting installation. Only personnel familiar with using electrical best practices should perform this install. Reference **ELECTRICAL BEST PRACTICES MANUAL (54479)** before attempting installation.

Install Instructions for Tailgate CHMSL Kit

Parts Included

71680	HARN, BRAKE LIGHT TOP 25'
71628	TOPPER LIGHT T17 W/ CONN
35353-0	BUTT CONN,22-18GA,SEALED
80700	DASH WARNING LABEL
BAG81366	FAS BAG, TOPSIDER CHMSL
1) FAS0922	SCREW,BHCS 8-32 X 0.63 SS
2) FAS1021	NUT,WELL 8-32 HD 0.312"
3) BAG0406-A	BAG, 4X6 3MIL
4) FAS0148	SCREW,FHP TEK 10-24X.5 ZN
5) FAS0066	WASHER,LCK EXT 1/4 ZP

71628

35353-0

80700

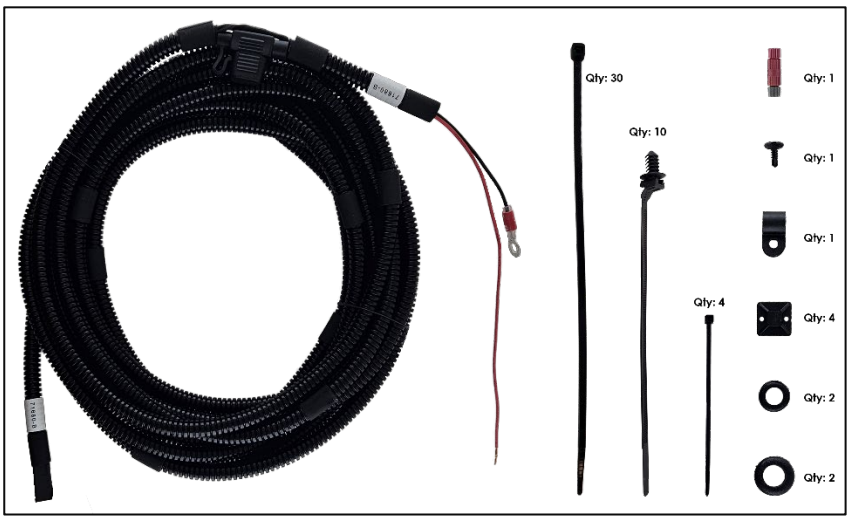

71680

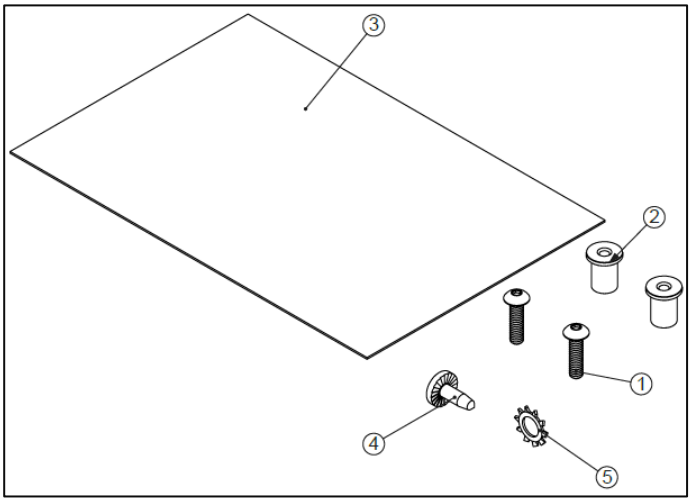

BAG81366

Tools Needed

1. Insulated Splice Crimper
2. Wire Strippers
3. Diagonal Cutters
4. Drill driver
5. Phillips Bit with 9/16” Drill driver bit
6. 3/4” Hole Saw or Step Drill
7. 10mm Socket
8. Socket driver and extensions

Figure 4-1: Tools Needed for Installation

Vehicle Specific Install Steps – Ford F-150

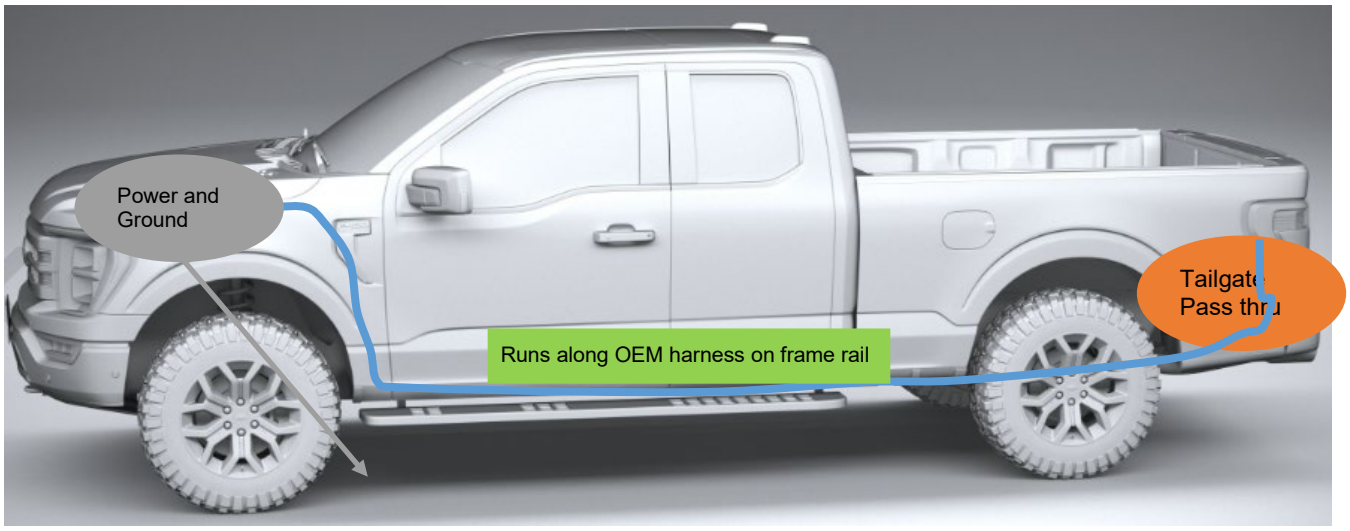

Vehicle Specific Install Steps – Ford F-150

Step 1:
Locate harness 71680. Remove the fuse from the inline fuse holder until the end of the install.

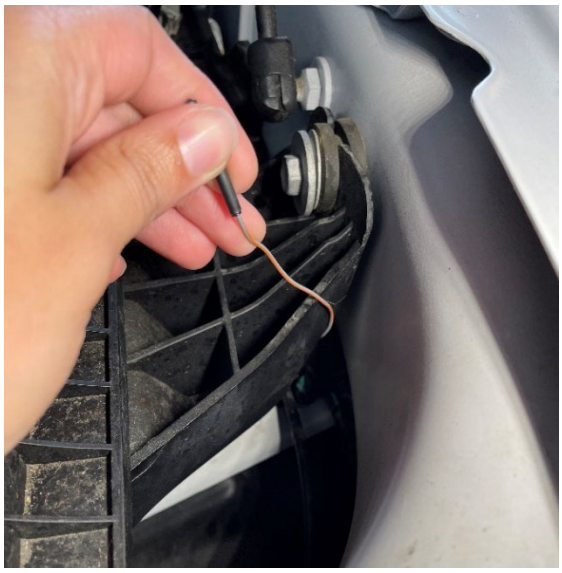

Step 2:
Open the hood of the F-150 and locate the OEM harness under the driver's side hood strut mount.

There will be a small gray/orange (ICE) or green/purple (Hybrid) wire with a black end cap that comes out separate from the OEM harness. This is the OEM CHMSL circuit wire for our 3rd brake light

Snip the black cover and strip the end of the wire. Crimp one end of the included butt splice connector to the OEM wire, and the other to the bare wire on harness 71680.

Step 3:
Back out the OEM ground screw and place the ring terminal from harness 71680 between the OEM ground point and the screw. Retighten the screw back in place.

Vehicle Specific Install Steps – Ford F-250/350

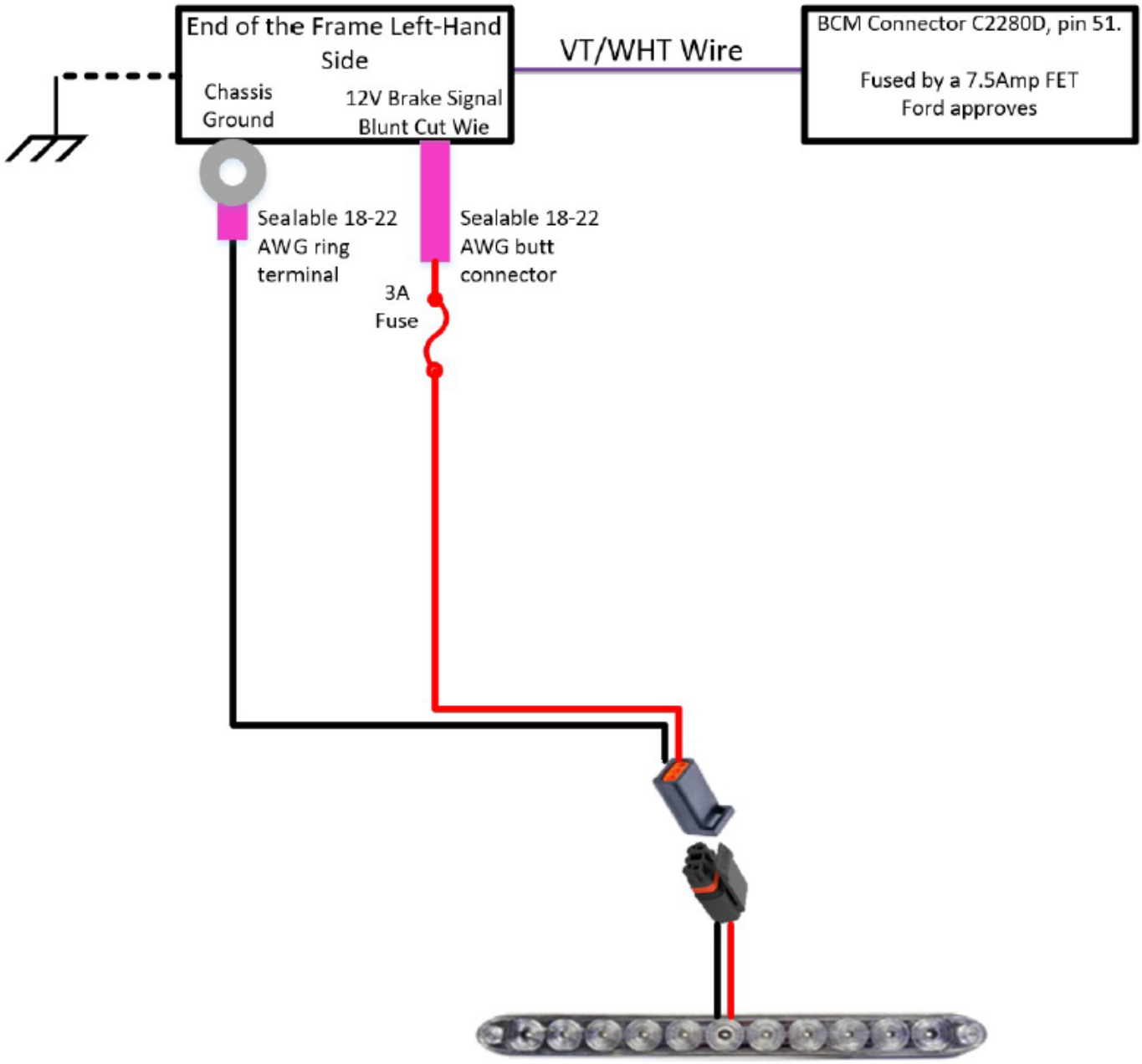

For MY23+ Ford F-250/350 with 6.75’ and 8’ Beds

Vehicle Specific Install Steps – Ford F-250/350

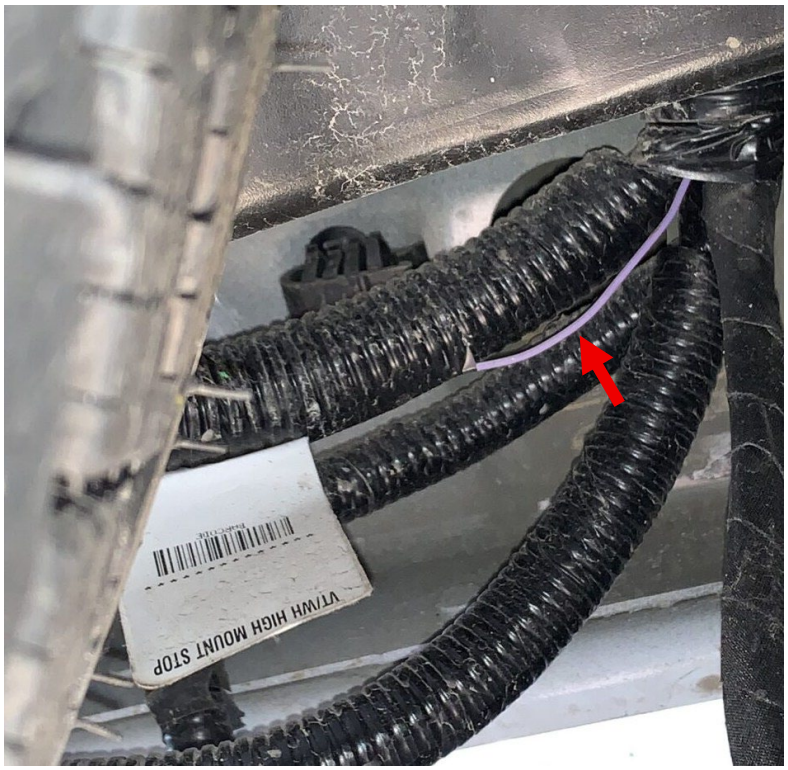

Step 1:
On the street side, rearward of the vehicle spare tire, there is access to the harnessing for the rear high mount stop signal.

Pull the OEM harness out from behind truck spare tire until you can visually see the blunt cut wire end wrapped in black tape. Locate the violet and white wire as shown in the image.

Strip the wire covering and prepare it to be connected to the brake light harness.

Step 2:
Grab harness 71680 with the ring terminal and butt connector.

Use the butt connector to connect to the OEM CHMSL wire. Use a heat gun to shrink the butt connector once crimped on. It must be completely sealed.

Use images as reference.

Vehicle Specific Install Steps – Ford F-250/350

Step 3:
Route the other end over the underbody frame rail to where the harness drops down the D pillar. Follow the image as reference.

Step 4:
Using the self-tapping screw and star washer (see Page 5), screw the ground wire ring terminal to the vehicle.

Be certain that self-tapping screw and star washer are on either side of the ring terminal and firmly tightened into the body sheet metal structure. It is advised to remove a small portion of the paint in that are to ensure good contact with the sheet metal ground. If the ground connection is loose or insufficient the brake light will work intermittently or not at all.

Ensure the fastener is sufficiently driven into the sheet metal and check the ring terminal cannot rotate.

Step 5:
Route the harness over towards the blunt cut wire, secure wiring along OEM harnesses in that same area.

Vehicle Specific Install Steps – Silverado

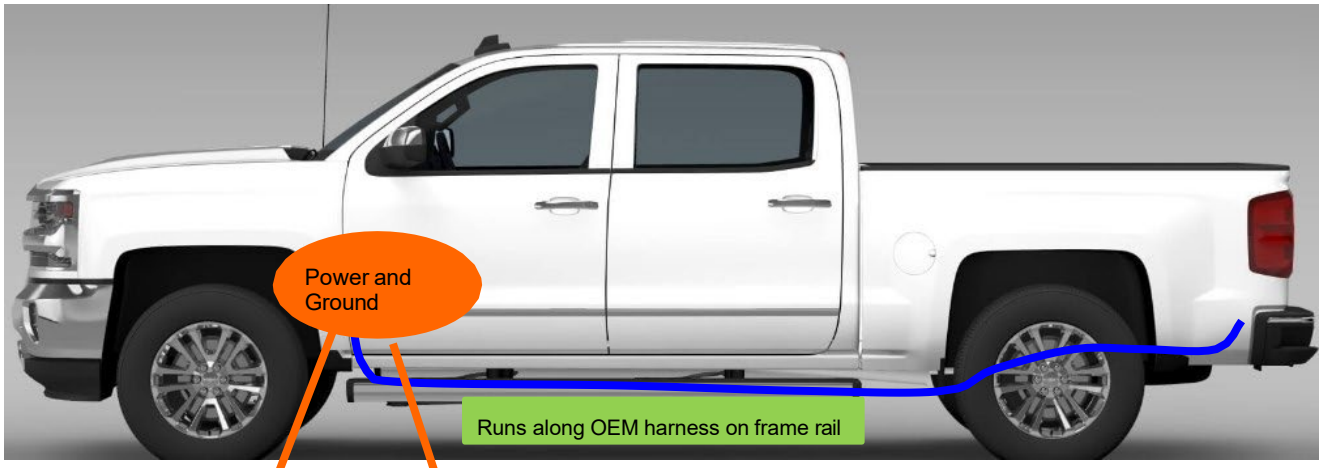

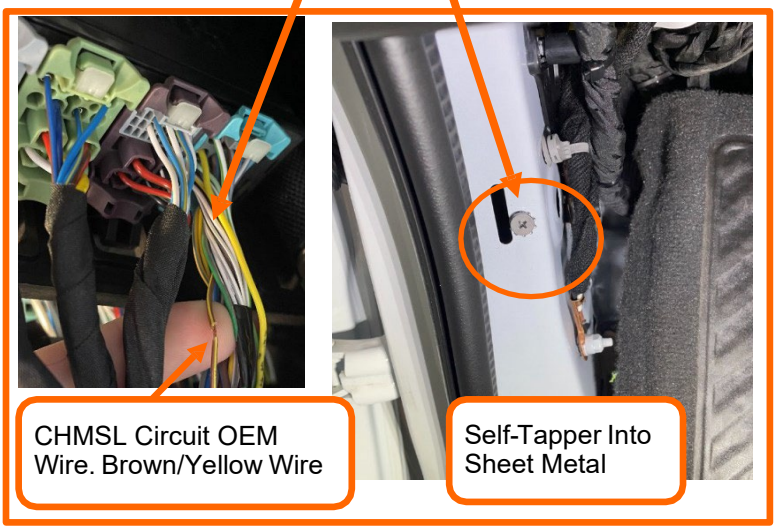

Vehicle Specific Install Steps – Silverado

Step 1:
Locate the brake light harness 71680.

Remove the fuse from the inline fuse holder until the end of the install.

Open the driver's side door. Remove the trim panels circled in red.

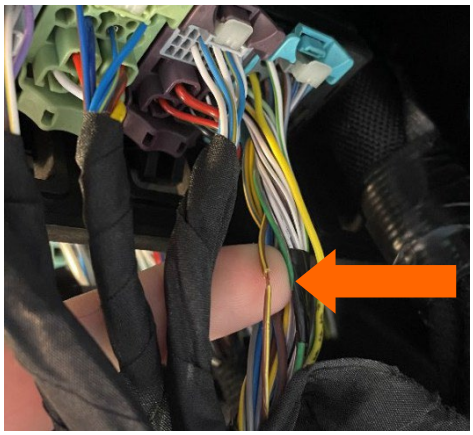

Step 2:
Locate the body control module on the lefthand side of the vehicle body, behind the OBDII port. There will be 5 colorful connectors with wire harnesses plugged into the bottom of the module.

Locate the light blue connector (X5), pin 25. This wire will be Yellow/Brown. This is the OEM CHMSL circuit wire for the brake light. Use a meter to be sure this is the correct wire (OEM's tend to change wire colors).

Separate the wire from the bundle (by your finder or a trim tool) to prepare it to be connected with the brake light harness.

Locate the posi-tap in the brake light harness bag.

Vehicle Specific Install Steps – Silverado

The red wire in the pictures is referencing the brake light harness.
The purple wire in the picture is referencing the OEM brake light signal wire.

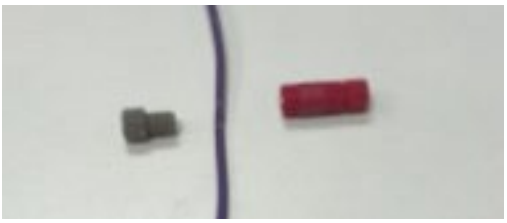

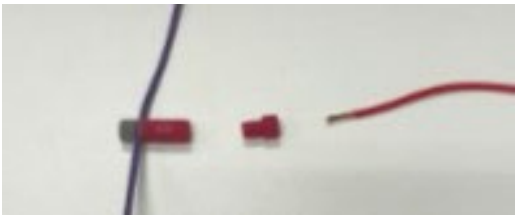

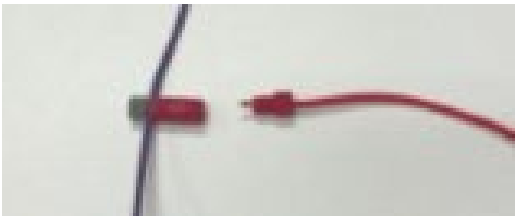

Step 3:

Remove the grey cap on the posi-tap.

Push the OEM brake signal wire into the insert on the grey cap.

Twist the grey cap back onto the posi-tap with the OEM wire secured. The pin point on the posi-tap will puncture the OEM wire and obtain the signal.

Remove the red cap on the posi-tap.

Insert the blunt cut end of the brake light harness through the red cap.

Twist the cap back onto the posi-tap with the brake light harness secured.

The picture to the left is the actual installed posi-tap onto the OEM wire.

Be sure the connection is secure.

Vehicle Specific Install Steps – Silverado

Step 4:
On the driver's side: locate the cut outs for the trim panels in the sheet metal near the OEM chassis ground. This is located to the left of the OBDII port on the vehicle body.

Locate the cut out that is higher on the frame than the OEM ground, shown in the picture to the left.

Locate the fastener bag BAG81366 and find the small tek screw and the star washer.

Insert the ring terminal through the star washer then through the ground ring terminal on the brake light harness.

Screw the tek screw into the frame like shown in the picture to the left.

Be sure not to over tighten or under tighten the screw. Be sure there is a good connection by checking the connectivity of the ground with a multimeter. You can do this seeing if there is a resistance (Setting "Ω" on meter) between the OEM copper ground and the new ring terminal.

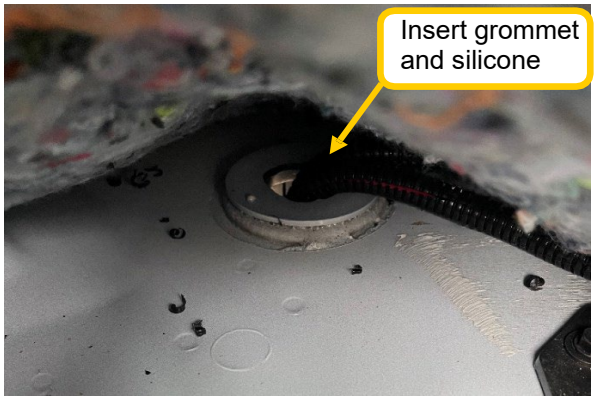

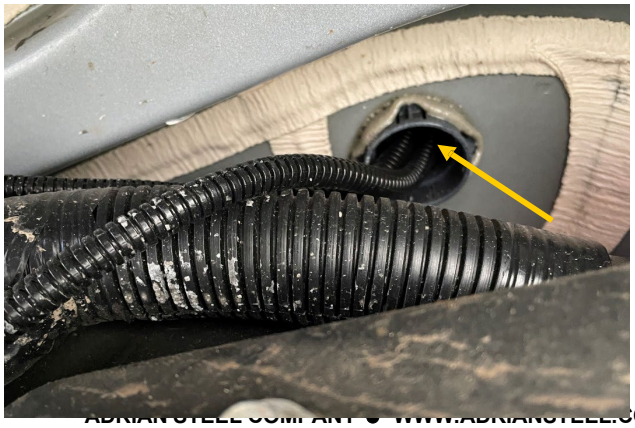

Step 5:
Locate the OEM floor grommet by lifting up the carpet on the driver's side.

If installing the interior lighting kit as well as the brake light kit, utilize the larger grommet supplied in the brake light harness bag.

If only installing the brake light harness, utilize the smaller grommet supplied in the brake light harness kit.

Drill (for larger grommet a 1" hole and 0.625" (5/8) hole for the smaller grommet) then route the wire harness through the grommet, to the underbody of the truck.

Silicone when done.

Vehicle Specific Install Steps – RAM 1500

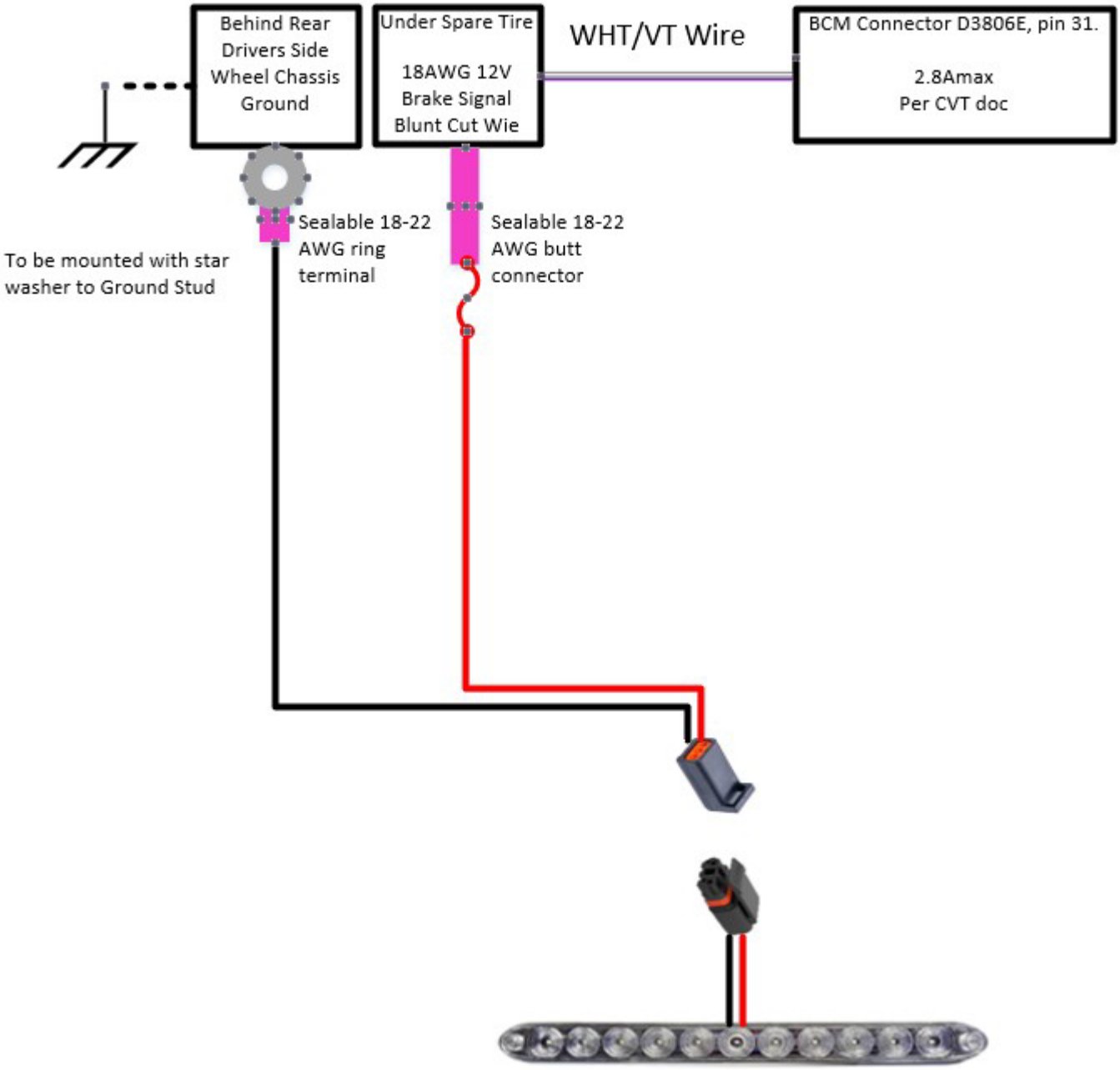

For MY23+ RAM 1500 with 5.6’, 6.3’, and 8’ Beds

Vehicle Specific Install Steps – RAM 1500

Step 1:
Locate the brake light harness 71680 that is dropped through the D-pillar and ensure that the fuse from the inline fuse holder is removed until the end of the install.

Step 2:
On the street side, rearward of the vehicle tire is access to the harnessing for the rear electrical. Locate OEM red and gray connector.

Look around the topside of the harness connections and follow the part of the harness that goes toward the center of the vehicle (towards the curb side) [See yellow arrow 1].

There will be a small tape covered wire separate from the OEM harness. It will have a black covering on the end [See yellow arrow 2].

This is the OEM CHMSL circuit wire for the brake light. Its color is White with a Violet stripe.

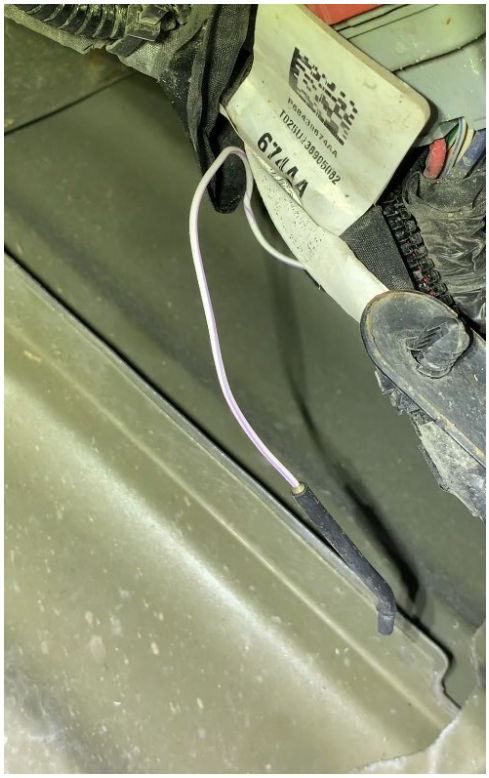

Vehicle Specific Install Steps – RAM 1500

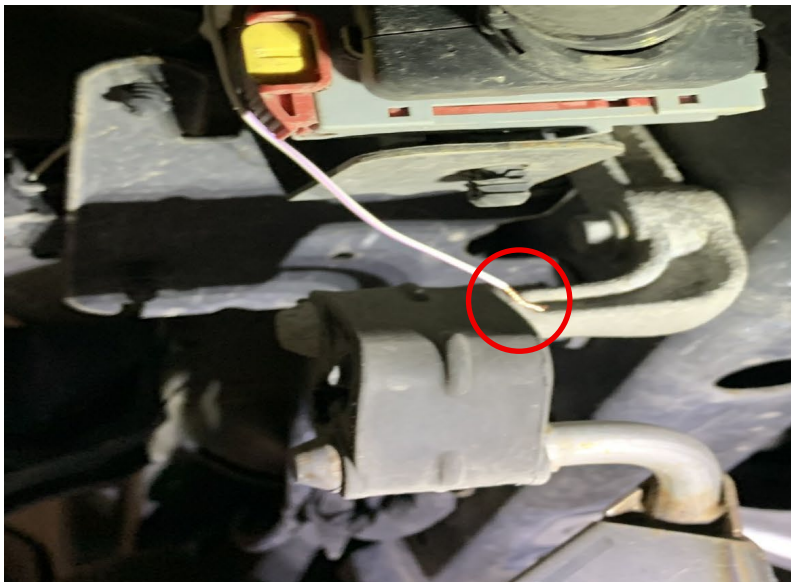

Step 3:
On backside of the OEM harness, locate the white and violet wire. Begin to strip the wire covering and prepare it to be connected to the brake light harness.
Use the image as reference.

Step 4:
Locate the end of the harness with the ring terminal and butt connector.

Use the butt connector to connect to the OEM CHMSL wire. Use a heat gun to shrink the butt connector once crimped on. It must be completely sealed.

Step 5:
Alongside of the OEM harness, locate the OEM chassis ground located on the frame—forward of the CHMSL connection, but still aft of the street side rear wheel. Shown circled in red in the image to the left.

Using a 10mm socket wrench, firmly secure the ring terminal on the brake light harness to the chassis ground. Be sure to place a 1/4” star tooth washer (FAS0066) in proper position, in front of ring terminal before securing back in place.

Vehicle Specific Install Steps – RAM 2500/3500

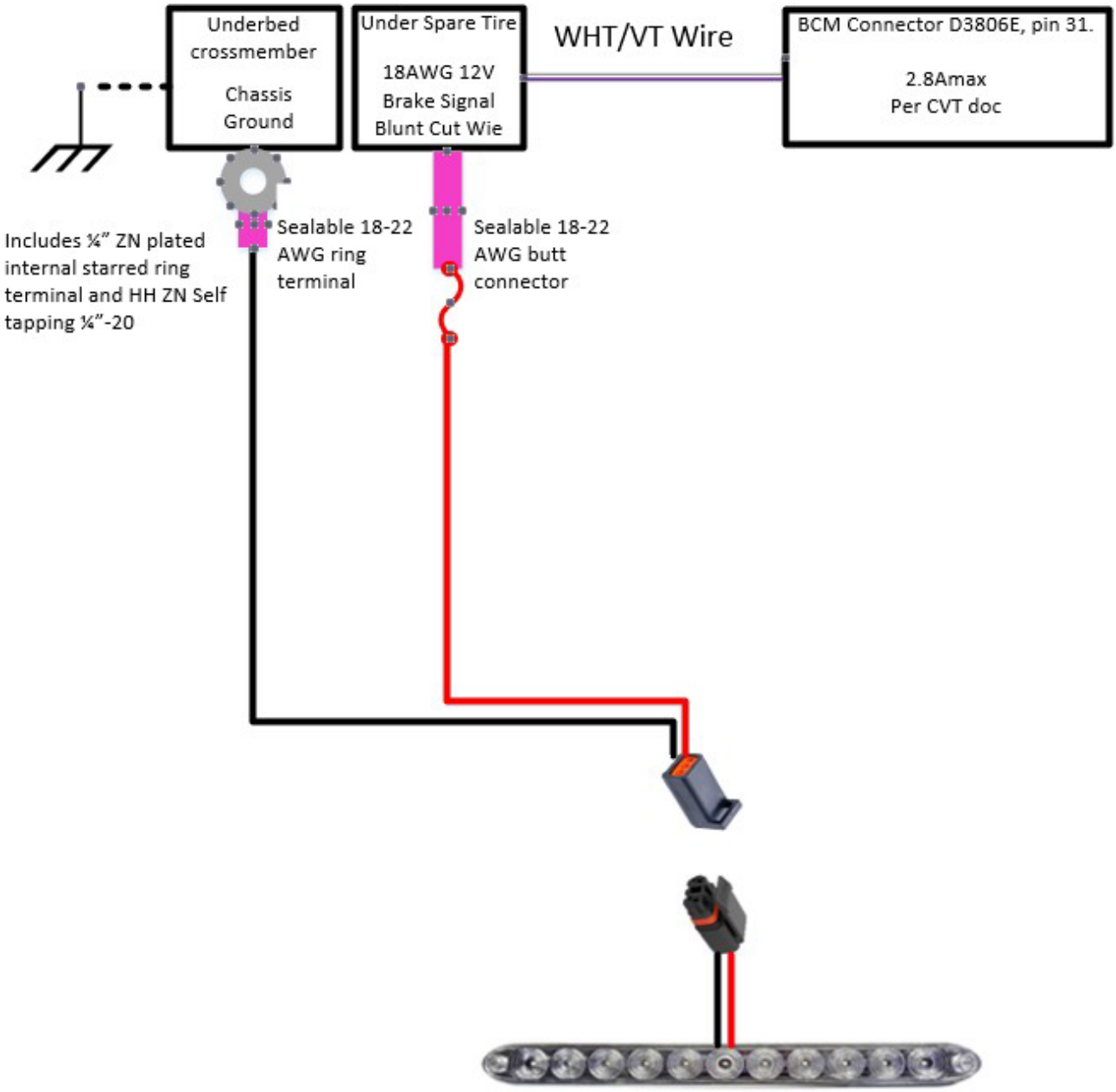

For MY23+ RAM 2500/3500 with 5.6', 6.3', and 8' Beds

Vehicle Specific Install Steps – RAM 2500/3500

Step 1:
Locate the underside of the vehicle. Near the spare tire, closer to passenger side, locate OEM harness shown in the image to the left. Cut white tape wrapped around harness. Begin to pull OEM harness out from behind truck tire until you can visually see the blunt cut wire end wrapped in black tape.

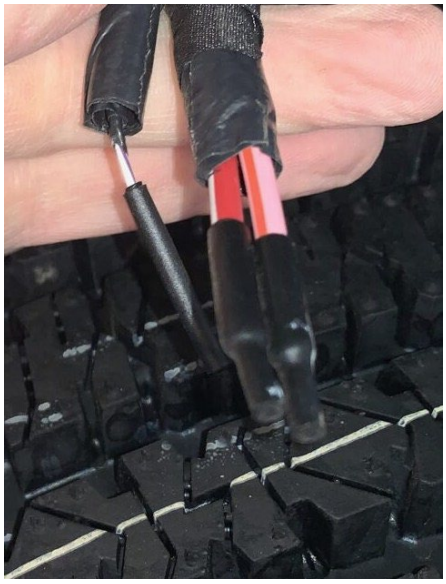

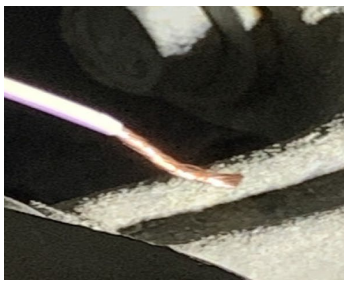

Step 2:
Locate the end of the harness with the ring terminal and butt connector.

Use the butt connector to connect to the OEM CHMSL wire. Use a heat gun to shrink the butt connector once crimped on. It must be completely sealed.

Step 3:
Route the other end over the underbody frame rail to the white underbed crossmember. Follow the image as reference.

Using a self-tapping screw, begin to screw the other end wire terminal to the vehicle.

1pc - ¼” HH Self tapper FAS0641
1 pc - ¼”Star tooth Washer Galv. FAS0066

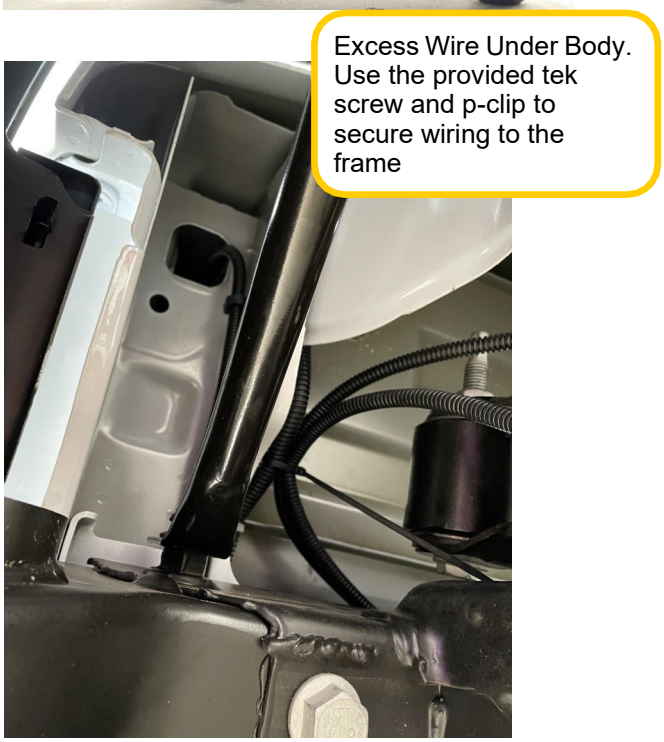

Refer to vehicle specific routing diagrams to route the harness into the tailgate.

Route the brake light harness rearward following the OEM wire harness on the frame.

Continue routing the harness rearward until you reach the bumper.

Route the harness between the bed and the tailgate, into the bottom of the tailgate.

Tuck any excess wiring into the empty cavity underneath the bed frame. Bundle the excess wire in the cavity using zip ties. Use the Tek screw and p-clip to secure the bundle to the frame.

Secure the wiring with zip ties.

DO NOT secure wiring to any brake lines.

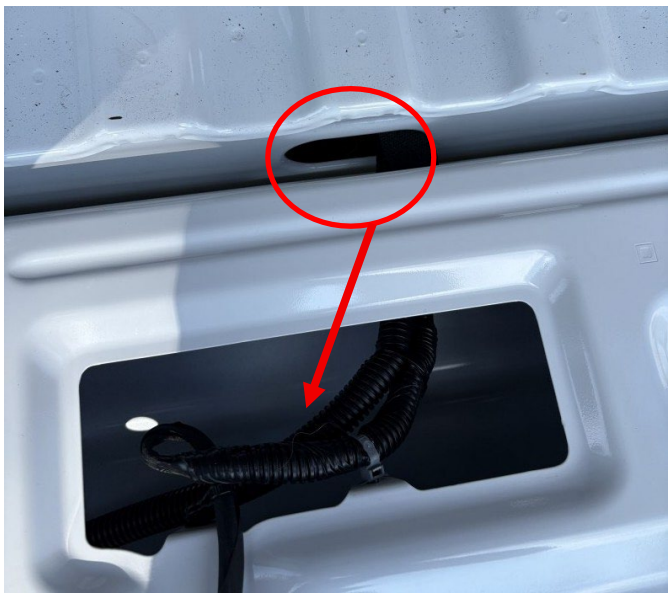

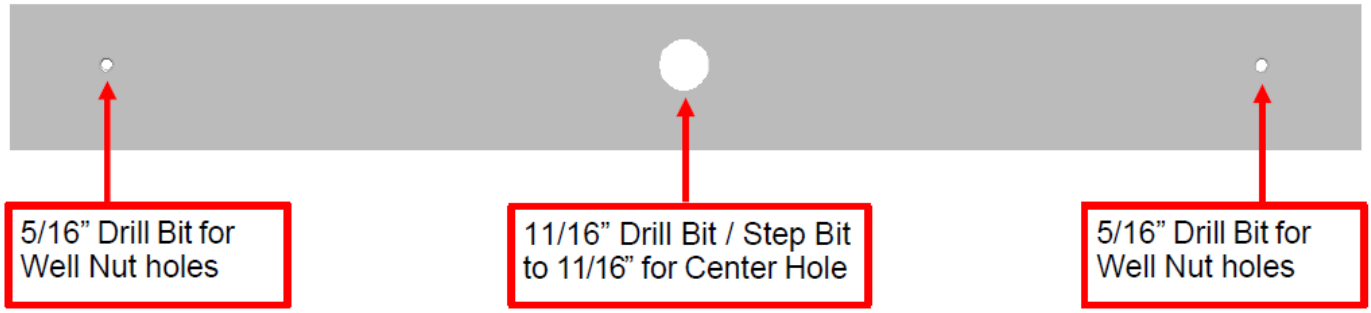

Drill the middle hole centered and as high on the tailgate as possible while making certain the light sits flat on the tailgate. The light must be at least 34 inches about the ground, and cannot be tilted at more than a 10 degree angle.

Place (2) FAS1021 Well Nuts in outside holes for the taillight. Ensure flange is flush to the tailgate. Using FAS0922 fasten taillights onto tailgate. Confirm Well Nuts have a good grab on the back side of the tailgate.

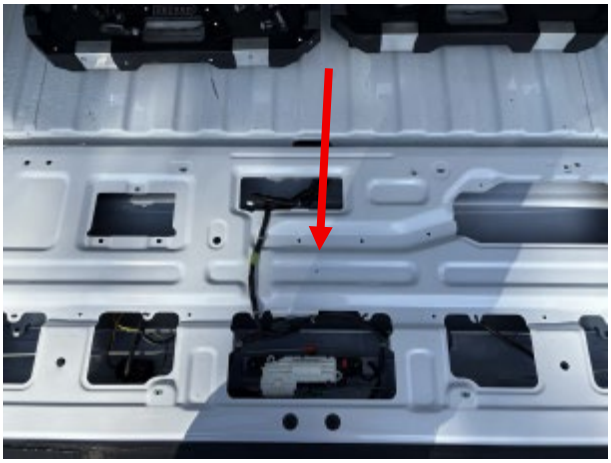

Continue routing the brake light harness inside the tailgate, to the light.

Connect the harness to the light:
Plug the connectors together. Pull connectors lightly to ensure they do not come apart.

Be sure the red wire on the harness connects to the black wire on the light. Then the black wire on the harness connects to the white wire on the light.

Insert the fuse into the inline-fuse holder on the brake light harness.

The install is now complete.

Check that the brake light comes on when the brake pedal is pushed, then back off once pedal is released.