INSTR. NUMBER : 80397	PG: 1	REV: C
PART NUMBER : TSBX-8F1E		
PART DESC. • TOPSIDER KIT, F-150, 8' • BOX, E-LOCK		

NOTE:
REFER TO 83171 INSTALL INSTRUCTION FOR KITS WITHOUT CAB GUARD

ITEM NO.	PART NUMBER	DESCRIPTION	QTY.
1	TS-BOX8	TOP SIDE BOX, 8' ASSEMBLY	2
2	TS-BKF2	TSB FORD 8' BED BRKT KIT	1
3	TS-CG1	TSBX, CAB GUARD KIT, 1	1
4	81244	KIT,TOPSIDER,8FT,ELOCK W/LIGHTING	1
5	81248	KIT, TAILGATE CHMSL	1

NOTE:
BOM IS FOR BOTH TSBX-8F1E AND TSBX-8F2E

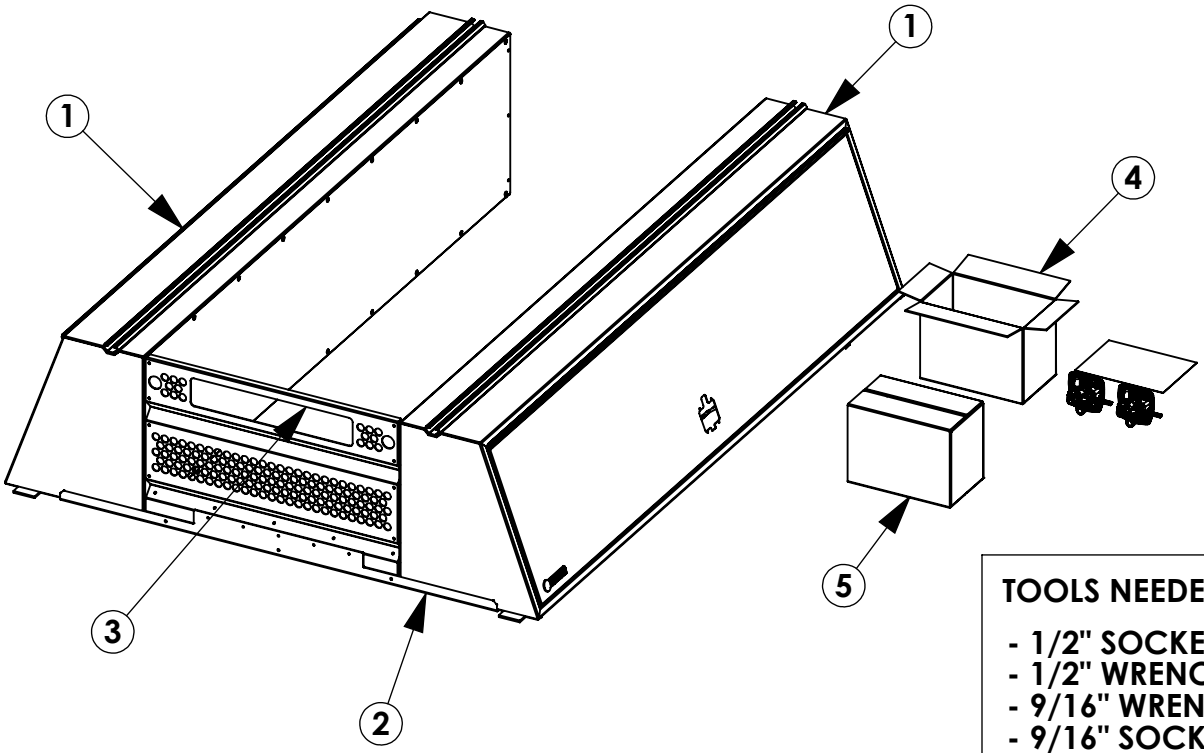

TOOLS NEEDED:

- 1/2" SOCKET
- 1/2" WRENCH
- 9/16" WRENCH
- 9/16" SOCKET
- 1/2" DRILL BIT
- 3/8" DRILL BIT
- STEP BIT
- DRILL
- RIVET GUN

INSTR. NUMBER : 80397	PG: 2	REV: C
PART NUMBER : TSBX-8F1M		
PART DESC. • TOPSIDER KIT, F-150, 8' • BOX		

ITEM NO.	PART NUMBER	DESCRIPTION	QTY.
1	TS-BOX8	TOP SIDE BOX, 8' ASSEMBLY	2
2	TS-BKF2	TSB FORD 8' BED BRKT KIT	1
3	TS-CG1	TSBX, CAB GUARD KIT, 1	1
4	TMLHK2	TOPPER MECHANICAL LOCK HATCH KIT	1
5	81248	KIT, TAILGATE CHMSL	1

NOTE:
BOM IS FOR BOTH TSBX-8F1M AND TSBX-8F2M

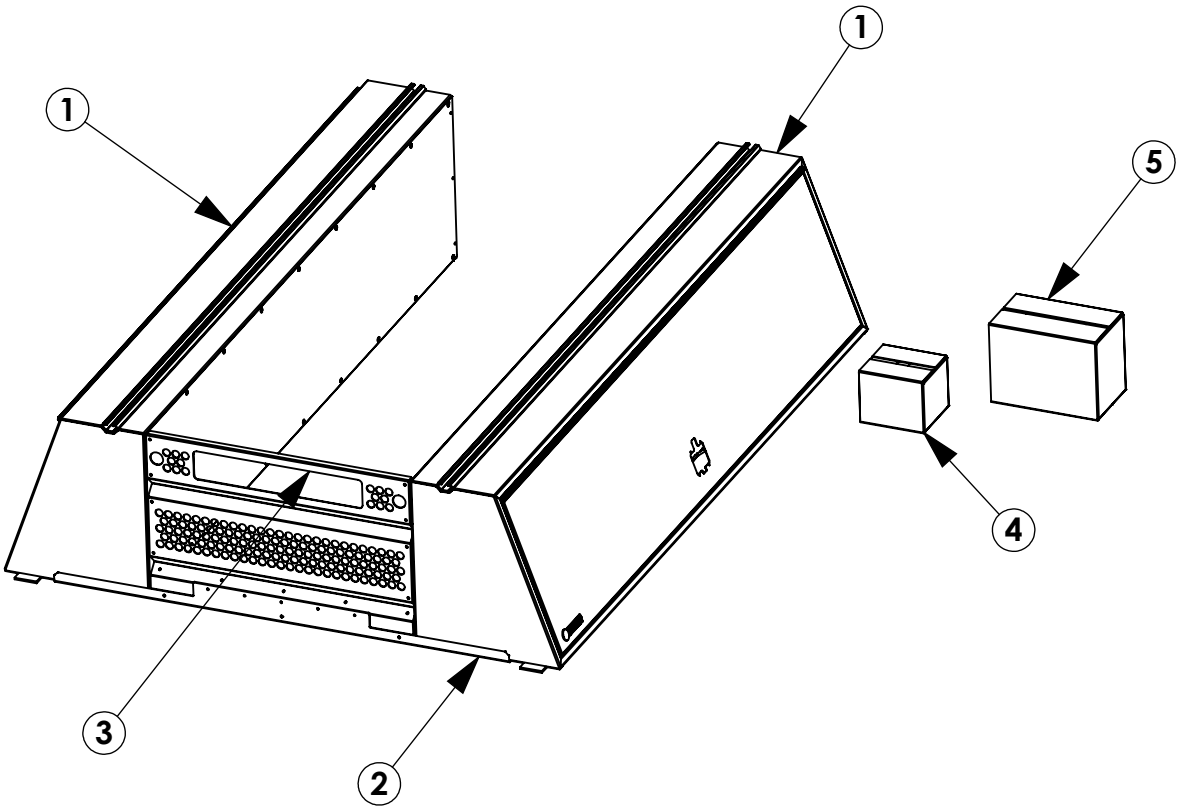

INSTR. NUMBER : 80397	PG: 3	REV: C
PART NUMBER : TSBX-8G1E		
PART DESC. • TSBX KIT,GM 1500, 8' BOX, • E-LOCK		

ITEM NO.	PART NUMBER	DESCRIPTION	QTY.
1	TS-BOX8	TOP SIDE BOX, 8' ASSEMBLY	2
2	TS-BKG2	TSBX, GM 8' BED BRKT KIT	1
3	TS-CG3	TSBX, CAB GUARD KIT, 3	1
4	81244	KIT,TOPSIDER,8FT,ELOCK W/LIGHTING	1
5	81248	KIT, TAILGATE CHMSL	1

NOTE:
BOM IS FOR BOTH TSBX-8G1E AND TSBX-8G2E

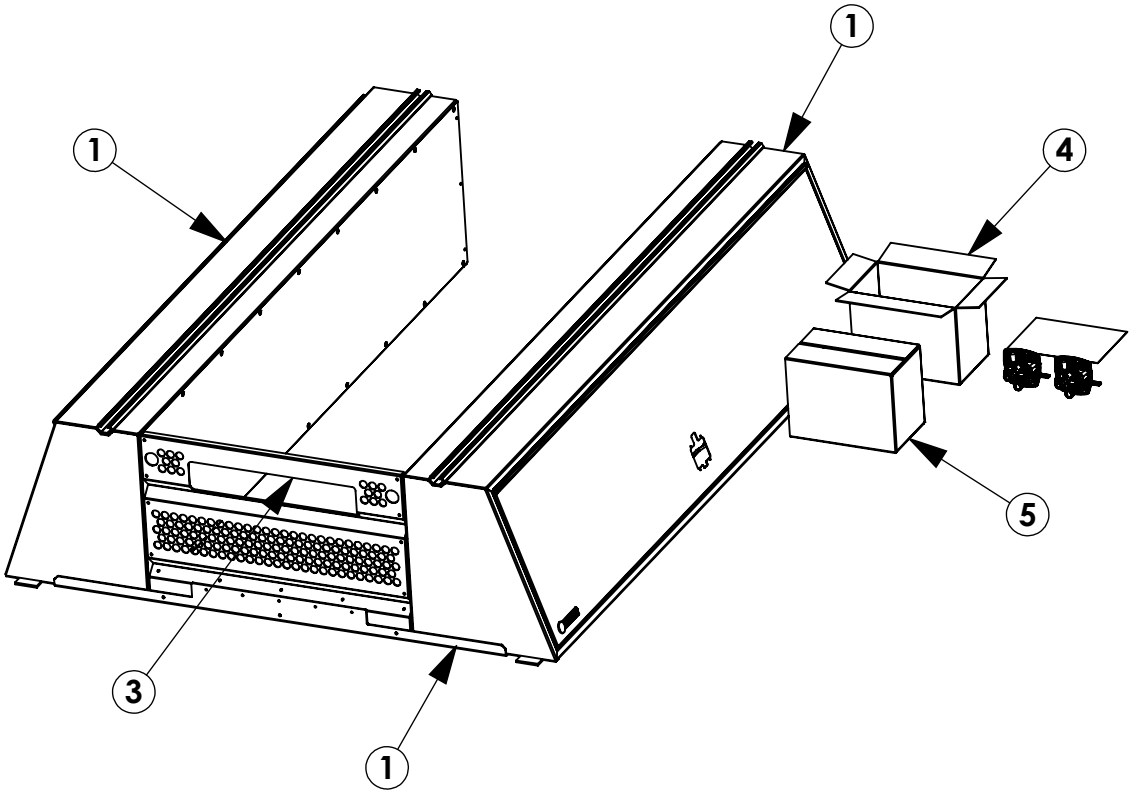

INSTR. NUMBER : 80397	PG: 4	REV: C
PART NUMBER : TSBX-8G1M		
PART DESC. : TSBX KIT,GM 1500, 8' BOX		

ITEM NO.	PART NUMBER	DESCRIPTION	QTY.
1	TS-BOX8	TOP SIDE BOX, 8' ASSEMBLY	2
2	TS-BKG2	TSBX, GM 8' BED BRKT KIT	1
3	TS-CG3	TSBX, CAB GUARD KIT, 3	1
4	TMLHK2	TOPPER MECHANICAL LOCK HATCH KIT	1
5	81248	KIT, TAILGATE CHMSL	1

NOTE:
BOM IS FOR BOTH TSBX-8G1M AND TSBX-8G2M

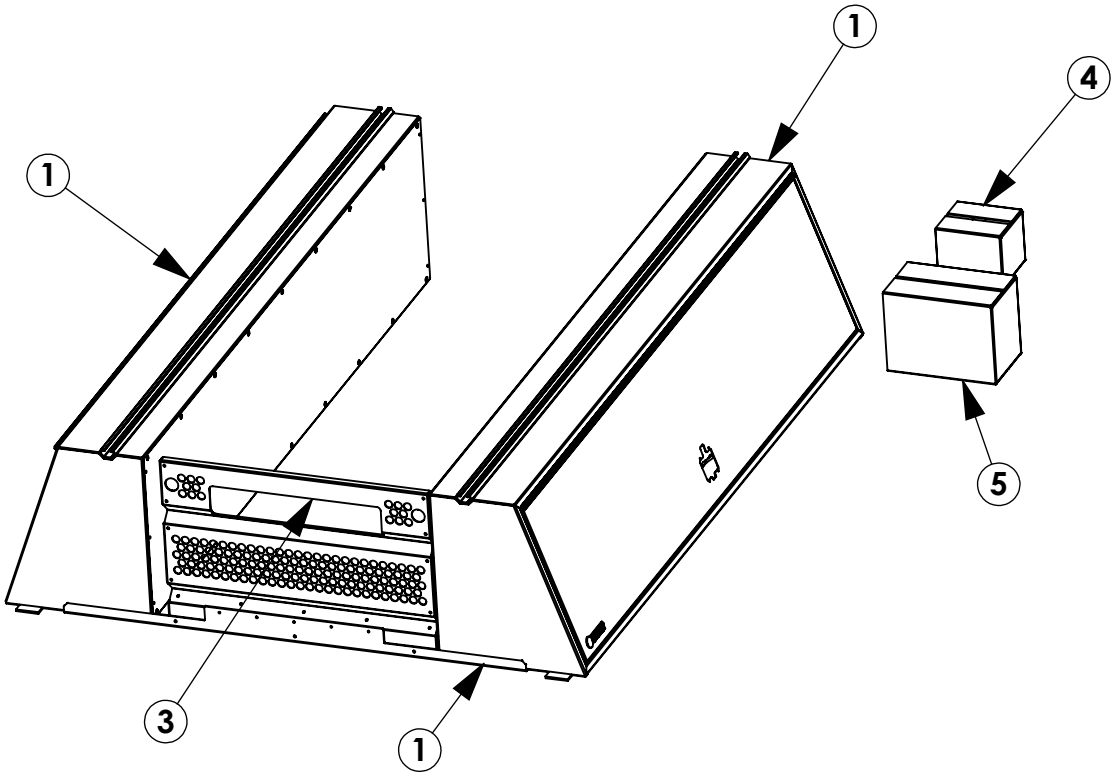

INSTR. NUMBER : 80397	PG: 5	REV: C
PART NUMBER : TSBX-8R1E		
PART DESC. • TOPSIDER KIT,RAM 1500, 8' • BOX, E-LOCK		

ITEM NO.	PART NUMBER	DESCRIPTION	QTY.
1	TS-BOX8	TOP SIDE BOX, 8' ASSEMBLY	2
2	TS-BKR2	TSBX, RAM 8' BED BRKT KIT	1
3	TS-CG3	TSBX, CAB GUARD KIT, 3	1
4	81244	KIT,TOPSIDER,8FT,ELOCK W/LIGHTING	1
5	81248	KIT, TAILGATE CHMSL	1

NOTE:
BOM IS FOR BOTH TSBX-8R1E AND TSBX-8R2E

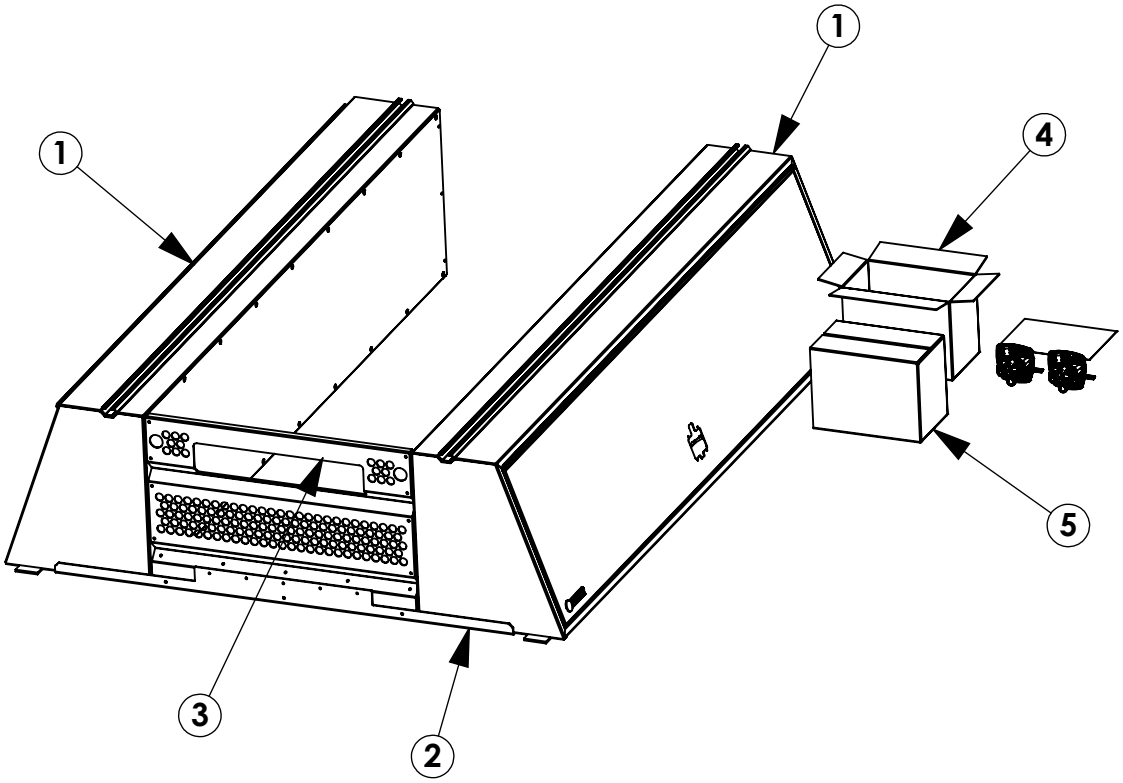

INSTR. NUMBER : 80397	PG: 6	REV: C
PART NUMBER : TSBX-8R1M		
PART DESC. • TOPSIDER KIT,RAM 1500, 8' • BOX		

ITEM NO.	PART NUMBER	DESCRIPTION	QTY.
1	TS-BOX8	TOP SIDE BOX, 8' ASSEMBLY	2
2	TS-BKR2	TSBX, RAM 8' BED BRKT KIT	1
3	TS-CG3	TSBX, CAB GUARD KIT, 3	1
4	TMLHK2	TOPPER MECHANICAL LOCK HATCH KIT	1
5	81248	KIT, TAILGATE CHMSL	1

NOTE:
BOM IS FOR BOTH TSBX-8R1M AND TSBX-8R2M

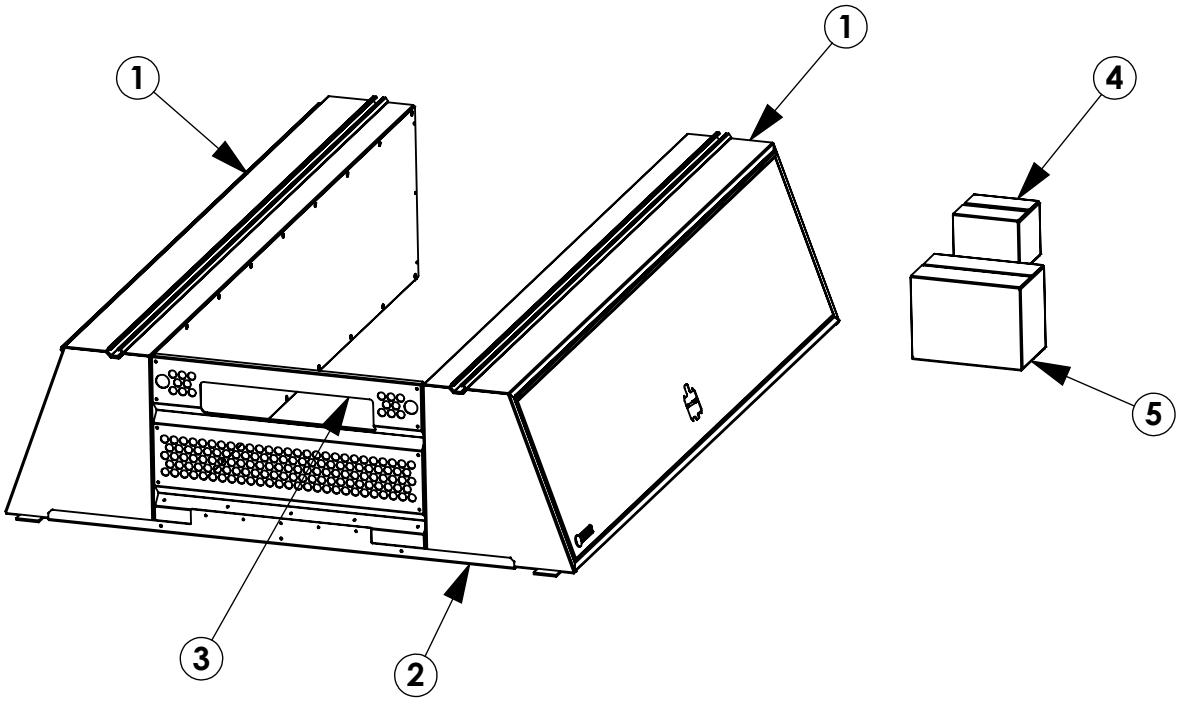

BEST PRACTICES

GET TO KNOW THE VEHICLE - AT THE BEGINNING OF ANY INSTALLATION, CHECK THE LOCATION OF THE FUEL TANK, FUEL LINES, BRAKE LINES, HIGH VOLTAGE BATTERIES AND WIRING HARNESSES TO AVOID INJURY OR PROPERTY DAMAGE FROM TOOL CONTACT.

SEAL ALL EXTERIOR HOLES - ALL INSTALLATION HOLES SHOULD BE SEALED WITH BUTYL TAPE OR SILICON TO PREVENT WATER AND EXHAUST GASES FROM ENTERING THE VEHICLE.

CONTROL DRILL DEPTH - TO AVOID DAMAGE TO THE VEHICLE, USE A DRILL STOP OR CLEARED STEP BIT WHEN DRILLING INSTALLATION HOLES.

ALWAYS ADD PRIMER - WHEN ADDING INSTALLATION HOLES BE SURE TO USE A SELF-ETCHING PRIMER TO PREVENT CORROSION, FASTENER FAILURE AND INJURY.

MOUNTING POINTS MUST HAVE METAL-TO-METAL CONTACT - USE PROVIDED MOUNTING SPACERS TO ACCOMMODATE FOR VEHICLE FEATURES, CARPET OR SUBFLOORS.

PROVIDE CLEARANCE FOR SPACERS - IF THE INSTALLATION VEHICLE CONTAINS A CARPET OR SUBFLOOR, USE A 1-3/16" DIAMETER CARPET CUTTER (P/N: 31183-0) AT ALL MOUNTING LOCATIONS TO OPEN UP ROOM FOR SPACERS.

CHECK SPACER ORIENTATION - BE SURE THAT THE INDENT IN THE SPACER COVERS THE PLUSNUT HEAD; THIS ENSURES THE MOST METAL-TO-METAL CONTACT AND REDUCES VIBRATION.

PLUSNUT INSTALLATION - A PLUSNUT GUN IS RECOMMENDED FOR PLUSNUT INSTALLATION FOR ITS PRODUCTION SPEED. HOWEVER, A PLUSNUT SETTING TOOL CAN ALSO BE USED (P/N: 22200-0).

THRU-BOLT CLEARANCE - WHEN USING A THRU-BOLT AT ANY MOUNTING LOCATION, BE SURE THAT YOUR HOLE HAS 1/16" CLEARANCE.

BEST PRACTICE: ORGANIZE ALL FASTENERS & VERIFY THAT ALL ARE ACCOUNTED FOR

FASTENERS USED

BAG REFERENCE: **BAG80398**

ITEM NO.	PART NUMBER	DESCRIPTION	QTY.
1	FAS0092	SCREW, HEX HD, 5/16-18X1.50 ZN PLATE, G8	4
2	FAS0091	PLUSNUT, 5/16	4
3	FAS0398	BOLT,CRG 5/16-18X1.0 SS	8
4	FAS1025	HHCS FLNG 1/2"-13, 1-1/2" 18-8 SS	2
5	26618-0	SILICONE SEALANT	1
6	FAS0552	WASHER, FLAT, 5/16, SST	8
7	FAS0688	EPDM WASHER	8
8	FAS0940	SCREW, BHTX 1/4-20X1 SS NP	9
9	FAS0584	RIVET, BLIND, DOMEHEAD, 1/4 X .25 GRIP	12
10	FAS0242	SCREW, HEX HD, 5/16-18X1.50 STAINLESS STEEL	10

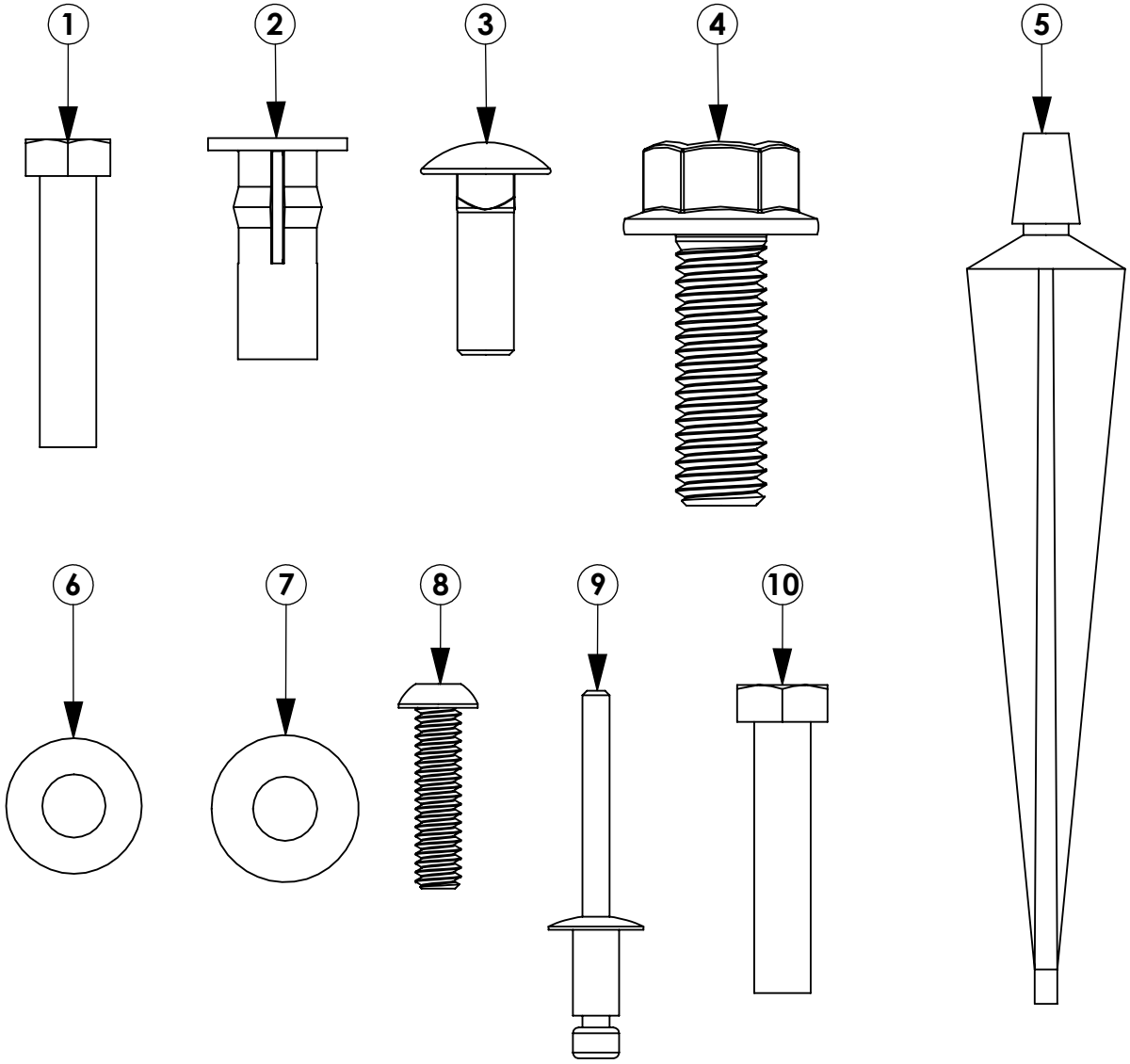

CONTINUE ON NEXT PAGE

INTENTIONALLY LEFT BLANK

BEST PRACTICE: ORGANIZE ALL FASTENERS & VERIFY THAT ALL ARE ACCOUNTED FOR

FASTENERS USED

BAG REFERENCE: **BAG80398**

ITEM NO.	PART NUMBER	DESCRIPTION	QTY.
11	FAS1026	NUT, HEX NLK FLG 1/2-13 SS	2
12	FAS0248	NUT, NYLON INSERT LOCK, 5/16-18 SST	18
13	FAS0098	WASHER, LOCK, SPLIT, 5/16, ZINC PLATE	4
14	FAS0086	WASHER,FLAT USS 5/16 ZP	4
15	FAS0055	NUT,HEX NLK FLG 1/4-20 ZP	9
16	FAS0334	WASHER,FLAT 1/2 SS	2
17	FAS0245	WASHER, FLAT, 5/16 HRD, ZN	20
18	FAS0234	WASHER, FLAT, 1/4, SST	9
19	FAS0164	WASHER,FLAT,SAE,5/16,ALUM	10

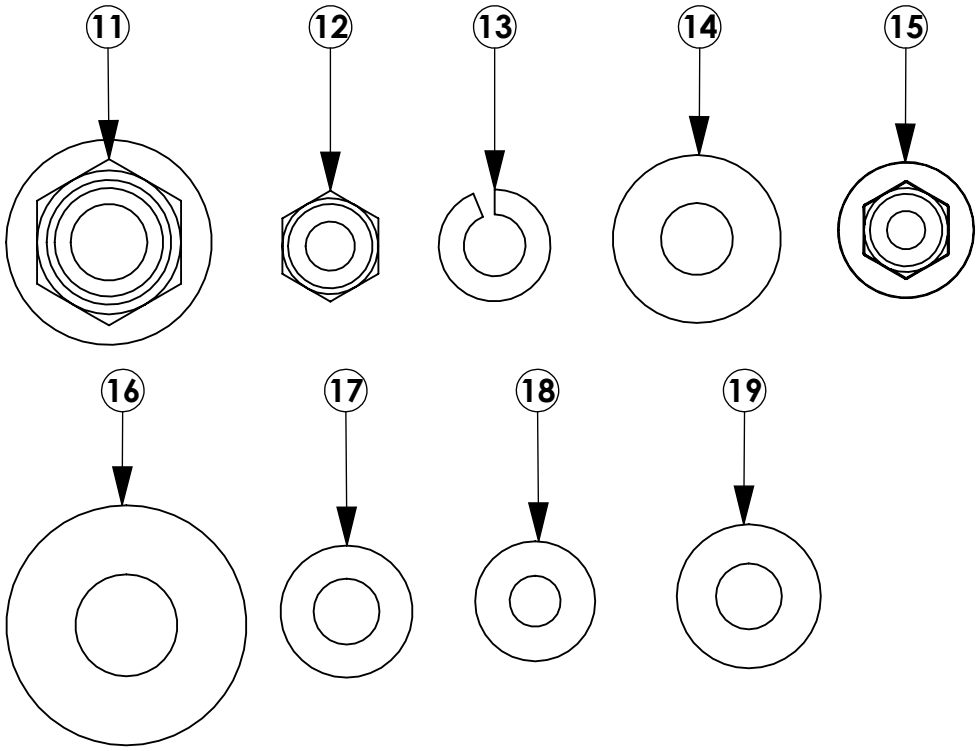

CONTINUE ON NEXT PAGE

INTENTIONALLY LEFT BLANK

STEP 1 - DETERMINE WHICH BOX WILL BE THE PS AND DS SIDE - THESE BOXES WILL SHIP FROM ASC SYMETRICAL

Step 1.1
IDENTIFY WHAT SIDE OF THE BOX WILL BE FASCING FORWARD AND REARWARD ON THE VEHICLE.

Step 1.2
FULLY TIGHTEN FAS0000 AND FAS0000 TO SECURE MECH. OR E-LOCK TO DOOR SEE LATCH INSTRUCTION FOR MORE DETAIL.

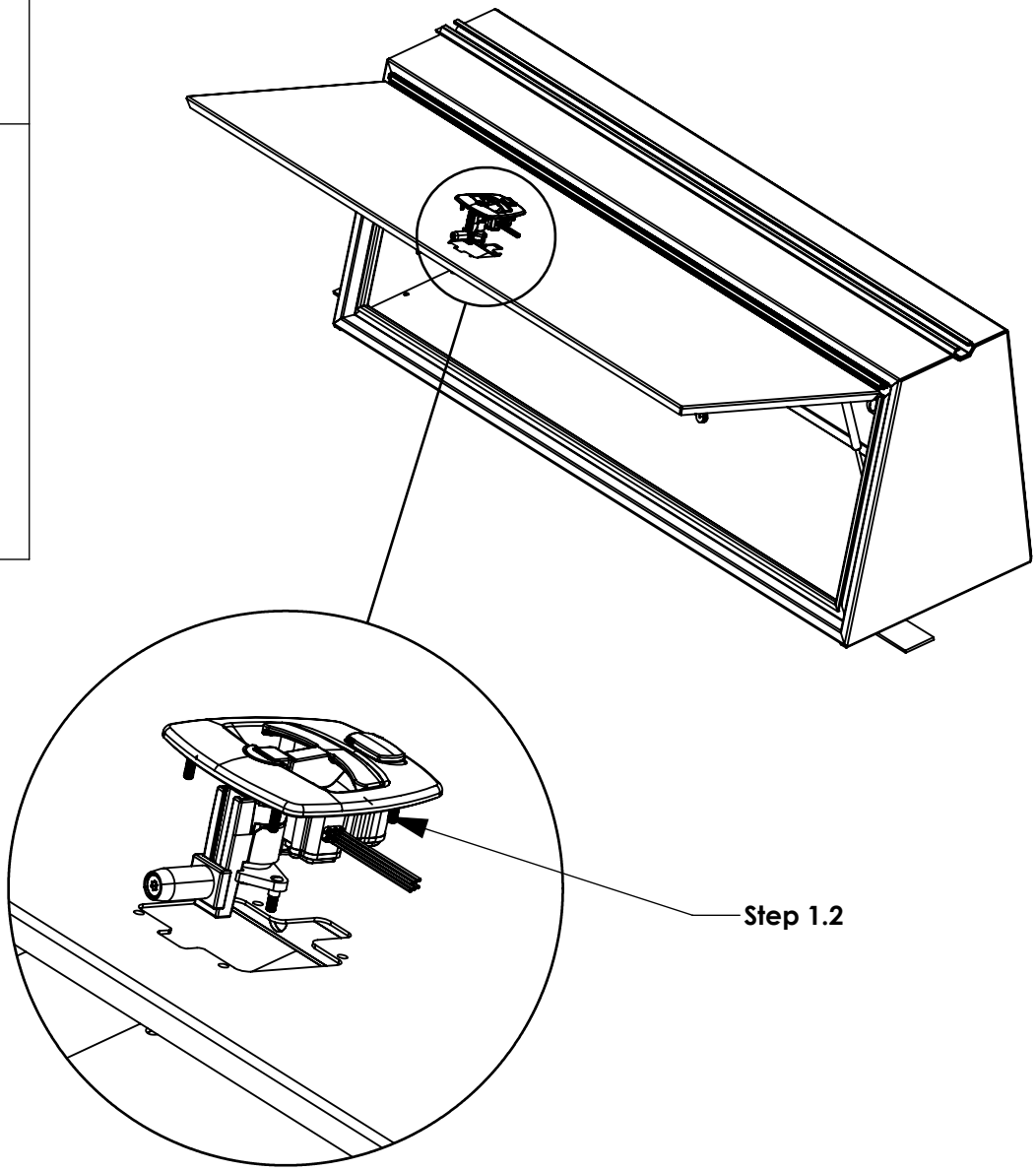

STEP 2.1 - PREP BED (FORD)

Step 2.1.1
LOCATE THE BED SUPPORT BRACEKTS IN THE TS-BK BOX, THESE ARE VEHICLE SPECIFIC. MAKE SURE THE PARTS YOU HAVE MATCH THE BOM FOR YOUR VEHICLE

Step 2.1.2
FOR FORD/RAM VEHICLE, REMOVE THE TAIL LIGHTS TO GAIN ACCESS TO MOUNTING HOLE SHOWN

Step 2.1.3
INSTALL REAR BRACKETS. YOU WILL NEED TO LOOSEN AND RETIGHTEN AT THE VERY END OF INSTALL PRIOR TO REINSTALLING TAIL LIGHT.

FULLY TIGHTEN (2)FAS1025, (2)FAS1026, & (2)FAS0334

1/2 WRENCH
1/2 SOCKET

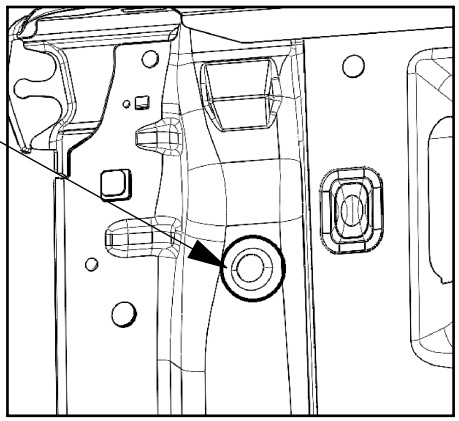

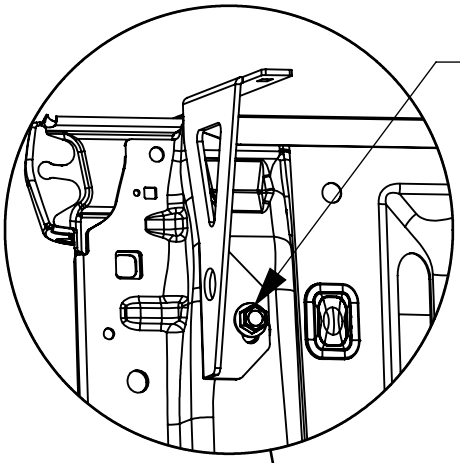

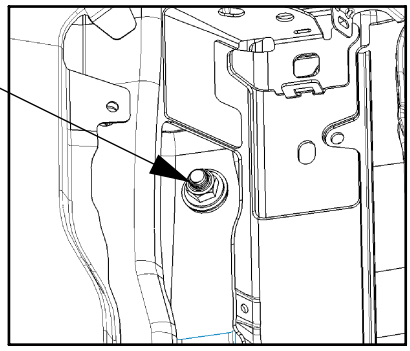

VIEW FROM INSIDE TAIL LIGHT

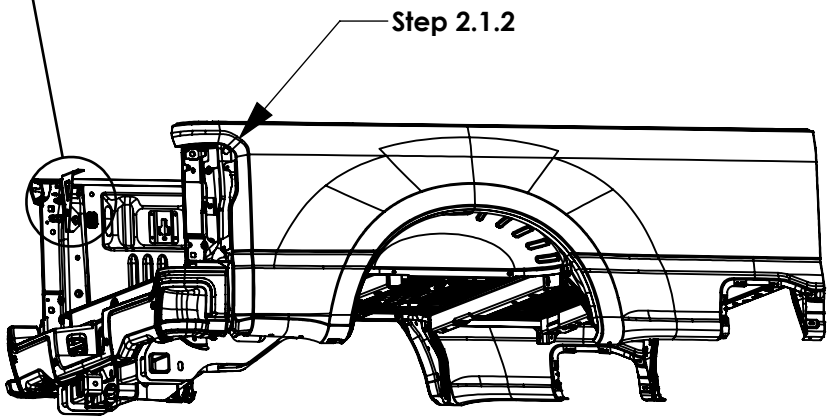

STEP 2.2 - PREP BED (RAM)

Step 2.2.1
LOCATE THE BED SUPPORT BRACEKTS IN THE TS-BK BOX, THESE ARE VEHICLE SPECIFIC. MAKE SURE THE PARTS YOU HAVE MATCH THE BOM FOR YOUR VEHICLE

Step 2.2.2
FOR RAM VEHICLE, REMOVE THE TAIL LIGHTS TO GAIN ACCESS TO MOUNTING HOLE SHOWN

Step 2.2.3
IDENTIFY OEM HOLE AT REAR OF BED (CIRCLES ABOVE) DRILL OUT TO .565" USING A STEP BIT ON BOTH SIDES OF BED

Step 2.2.4
INSTALL REAR BRACKETS. YOU WILL NEED TO LOOSEN AND RETIGHTEN AT THE VERY END OF INSTALL PRIOR TO REINSTALLING TAIL LIGHT.

FULLY TIGHTEN (2)FAS1025, (2)FAS1026, & (2)FAS0334

1/2 WRENCH
1/2 SOCKET

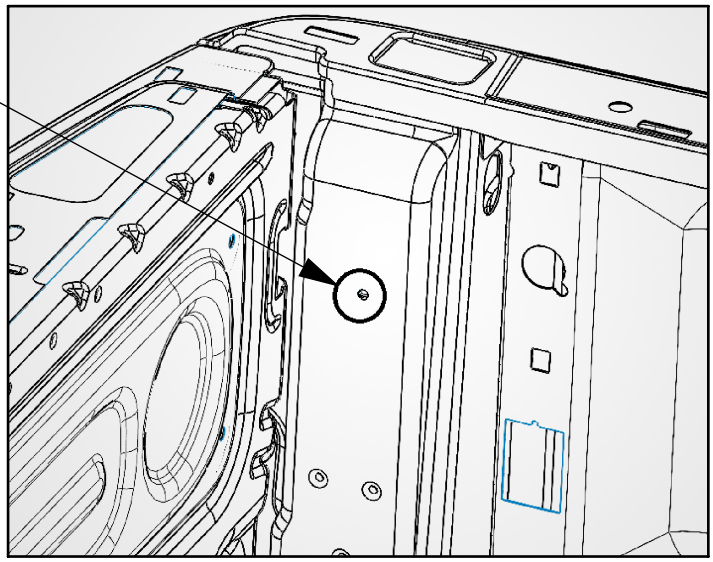

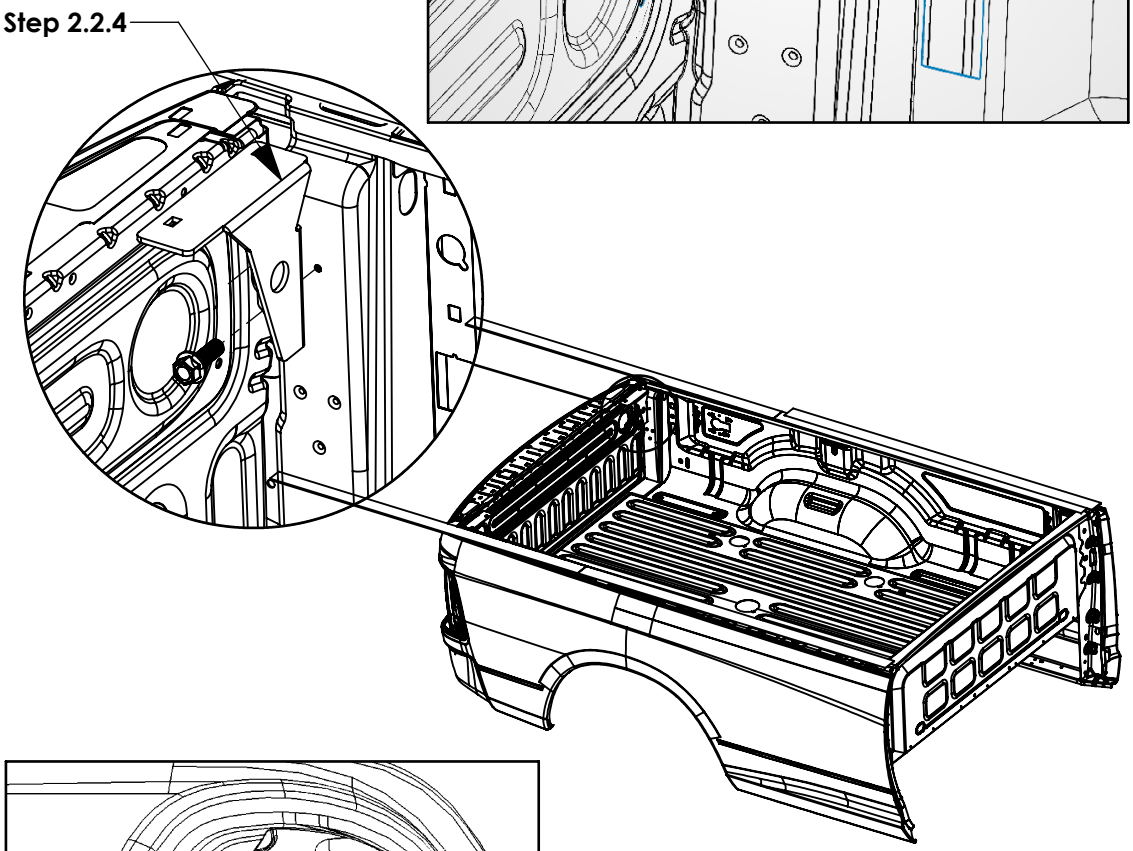

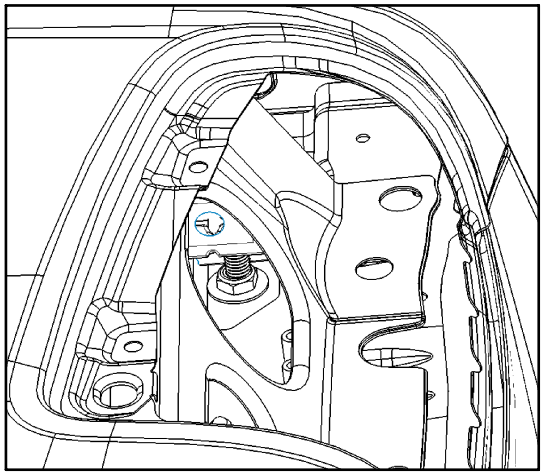

VIEW FROM INSIDE TAIL LIGHT

STEP 2.3 - PREP BED (GM)

Step 2.3.1
LOCATE THE BED SUPPORT BRACEKTS IN THE TS-BK BOX, THESE ARE VEHICLE SPECIFIC. MAKE SURE THE PARTS YOU HAVE MATCH THE BOM FOR YOUR VEHICLE

Step 2.3.2
FOR 1500, ALIGN TOP HOLE ON BED BRKT WITH HOLE SHOWN ON REAR OF TRUCK BED AND MARK CENTER OF LOWER SLOT WITH PAINT PEN

FOR 2500, ALIGN BOTTOM HOLE ON BED BRKT WITH BOTTOM HOLE SHOWN ON REAR OF TRUCK BED AND MARK CENTER OF SLOT WITH PAINT PEN.

Step 2.3.3
DRILL OUT OEM HOLE AND PAINT MARKED HOLE FOR 5/16" PLUS NUT AND INSTALL FAS0091

Step 2.1.4
INSTALL REAR BRACKETS FULLY TIGHTEN (2)FAS1025, (2)FAS1026, & (2)FAS0334

1/2 WRENCH
1/2 SOCKET

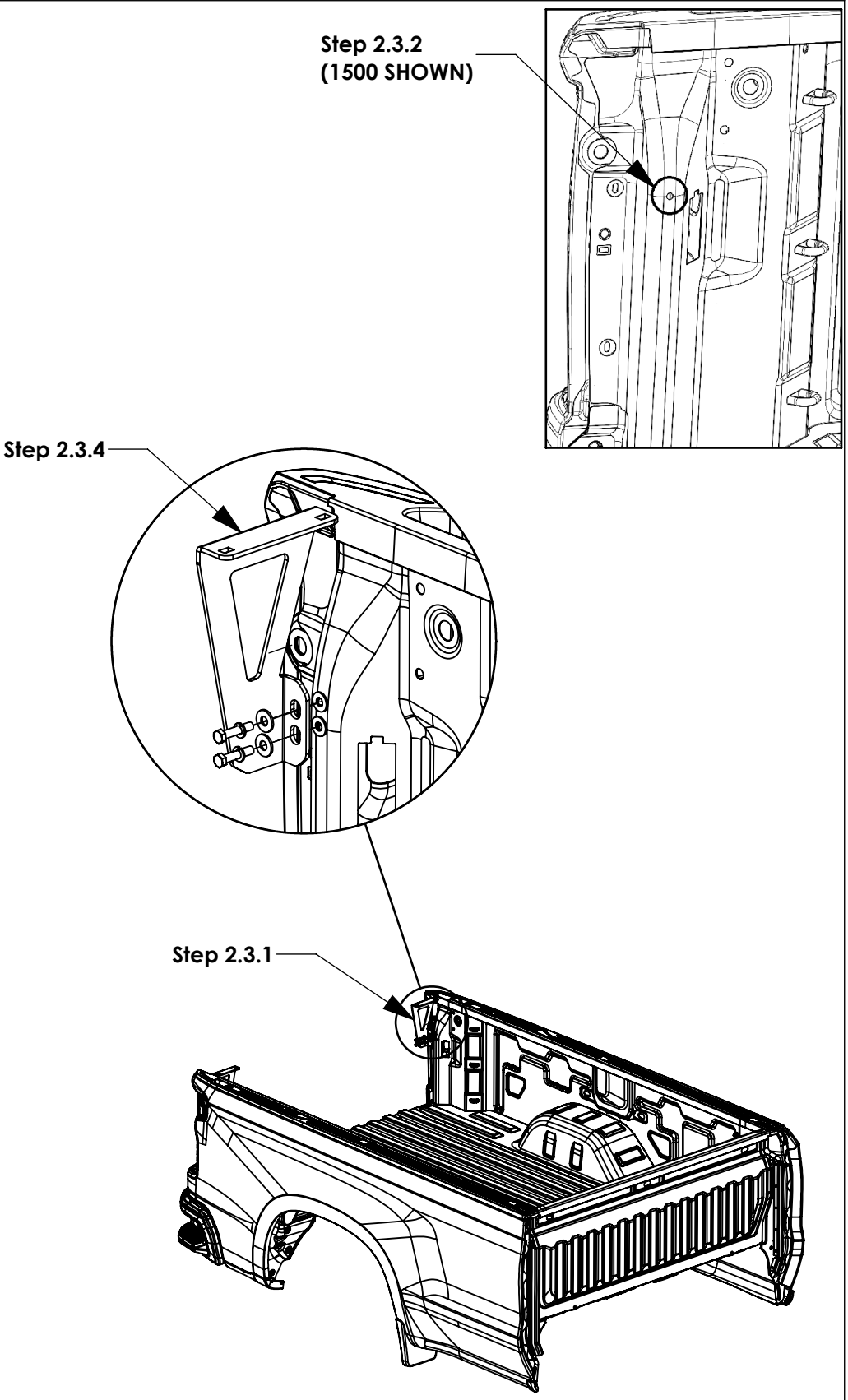

STEP 3 - PREP BED WITH FOAM STRIPS

Step 3.1
APPLY FOAM STRIPS 73632 (QTY4 x FOR WHOLE BED-2 EACH SIDE) START FLUSH WITH THE END OF THE CAB SIDE OF THE BED RAIL.
DO NOT TRIM EXCESS UNTIL FULLY INSTALLED.

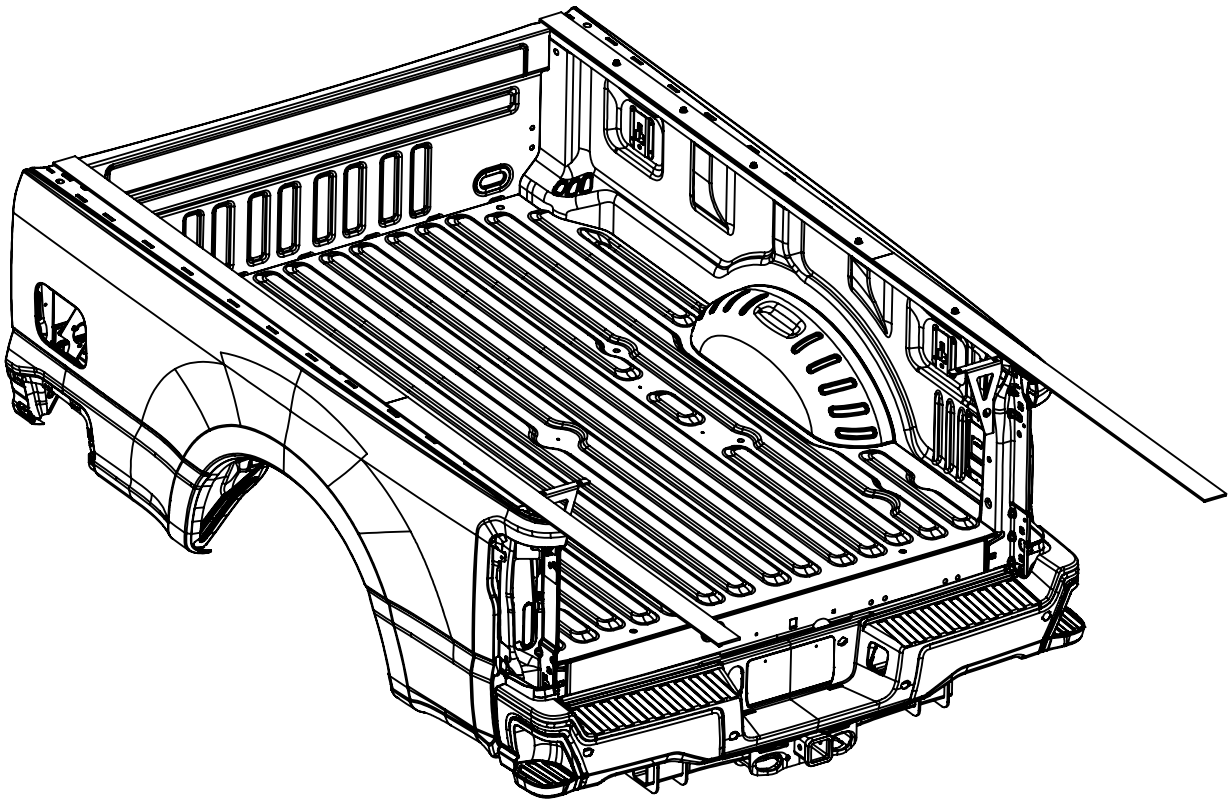

STEP 4 - PLACE BOXES ON BED SO THE OVERHANG THE TAILGATE BY 2-3 FEET - ATTACH BOXES WITH FRONT RAIL SUPPORT

Step 4.1
PLACE BOXES ON BED AS SHOWN ALIGN 79950-B TO THE BOTTOM OF BOTH BOXES ON THE CAB SIDE OF THE VEHICLE.

Step 4.2
HAND TIGHTEN ASSEMBLY UNTIL AFTET STEP 7.1 THEN FULLY TIGHTEN.
(4)FAS0398,
(4)FAS0248, &
(4)FAS0688

1/2" WRENCH
1/2" SOCKET

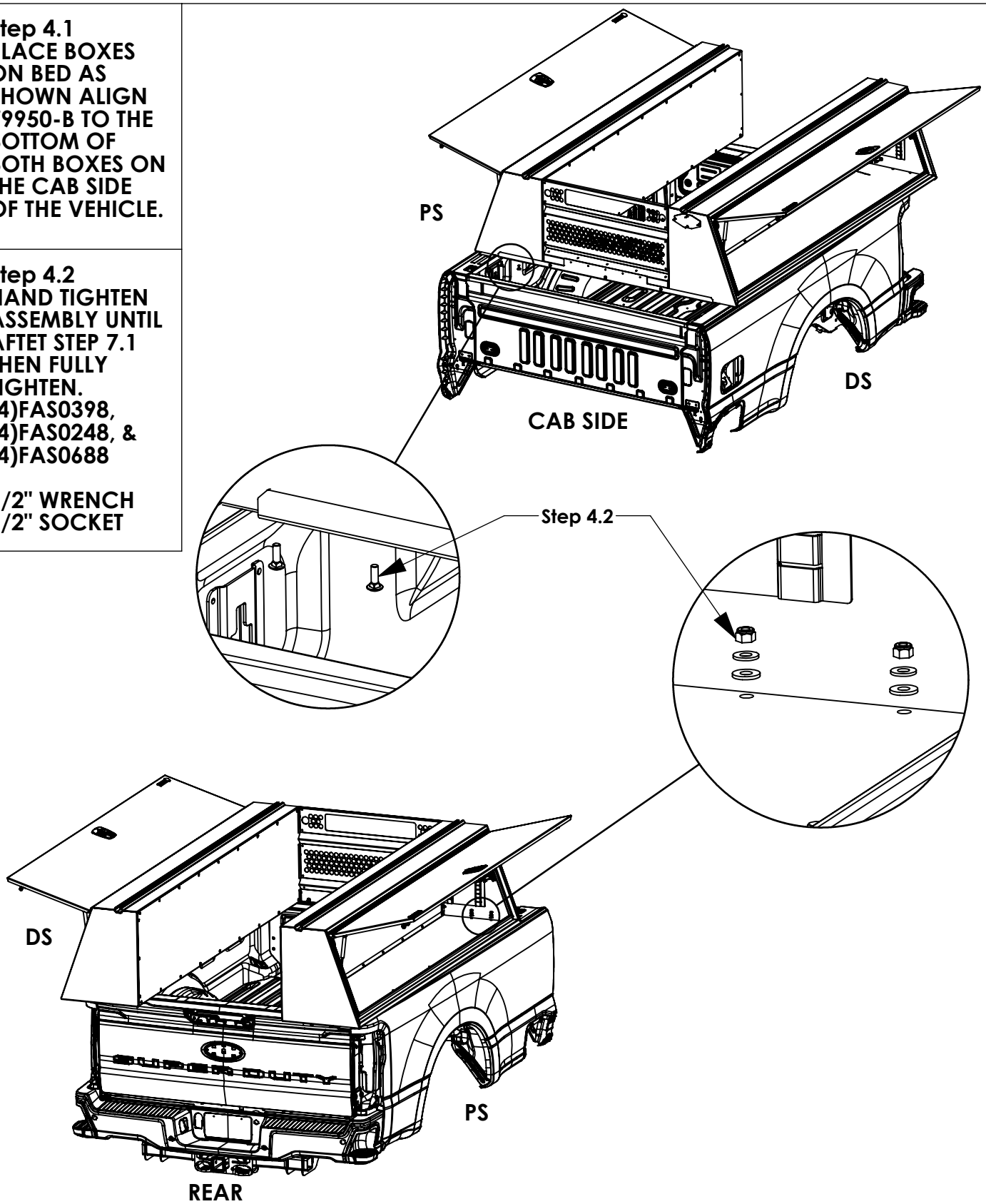

STEP 4 - SET CAB GUARD IN PLACE IN ORIENTATION SHOWN - USE PRY BAR TO WEDGE INTO PLACE IF NECESSARY

Step 4.3
FULLY TIGHTEN (3)FAS0055, (3)FAS0234, 7 (3)FAS0920

7/16 WRENCH
7/16 SOCKET

Step 4.4
FULLY TIGHTEN (6)FAS0055, (6)FAS0920 ON BOTH SIDES OF THE CAB GUARD

7/16 WRENCH
7/16 SOCKET

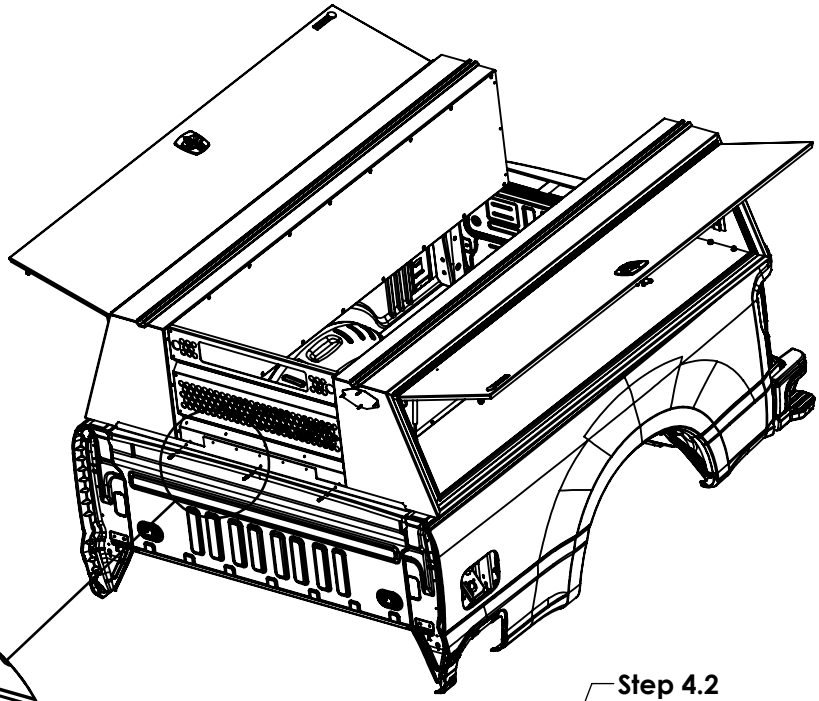

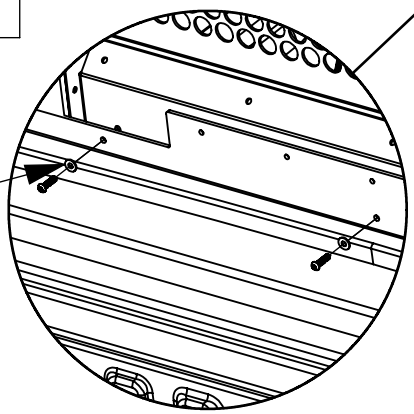

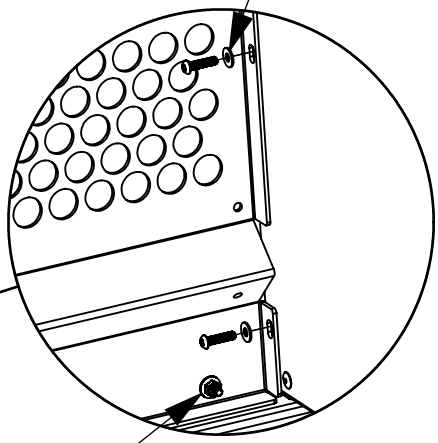

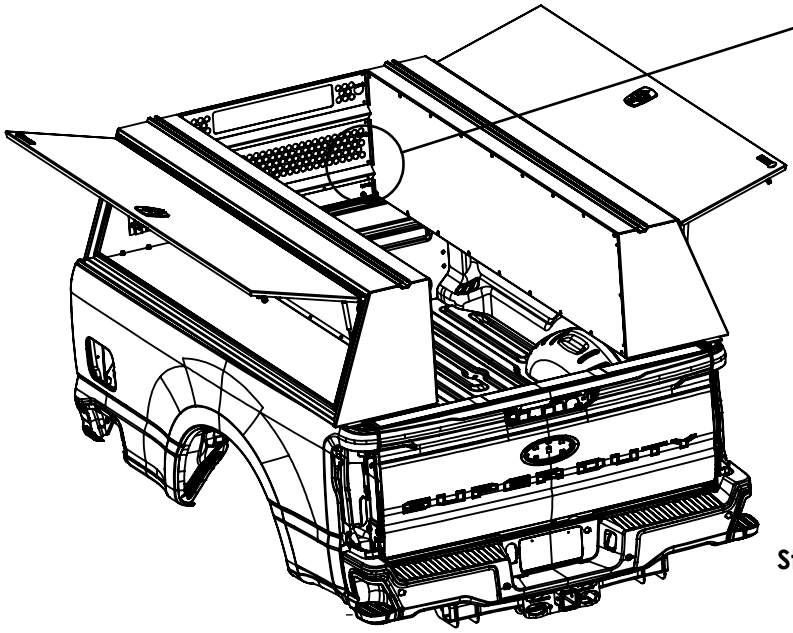

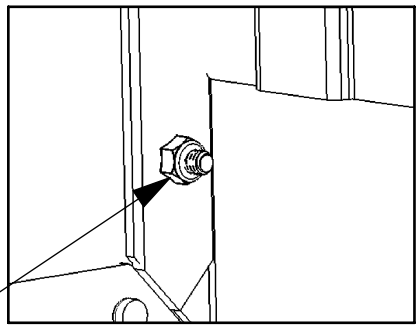

VIEW FROM INSIDE TOOL BOX

CHECK THAT THE BOXES ARE CENTERED ON VEHICLE

STEP 5 - MEASURE DISTANCE FROM BED RAIL AT CURB SIDE AND ENSURE BOTH SIDES ARE EQUAL

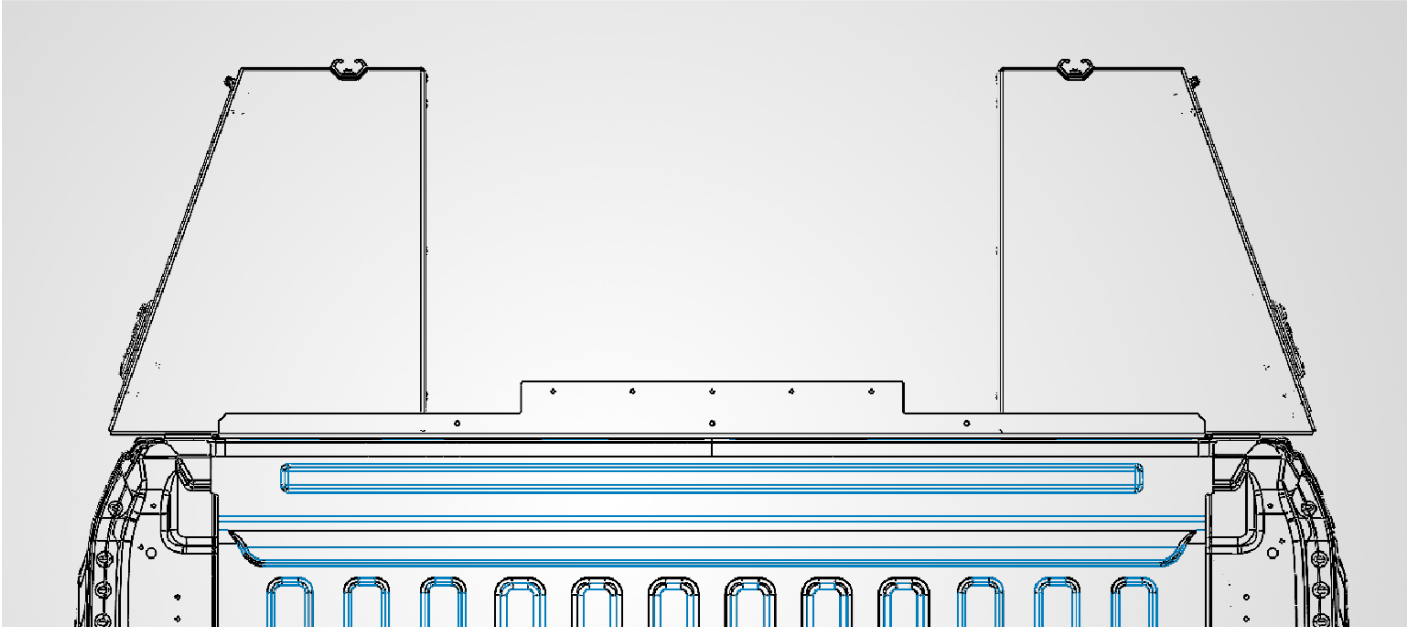

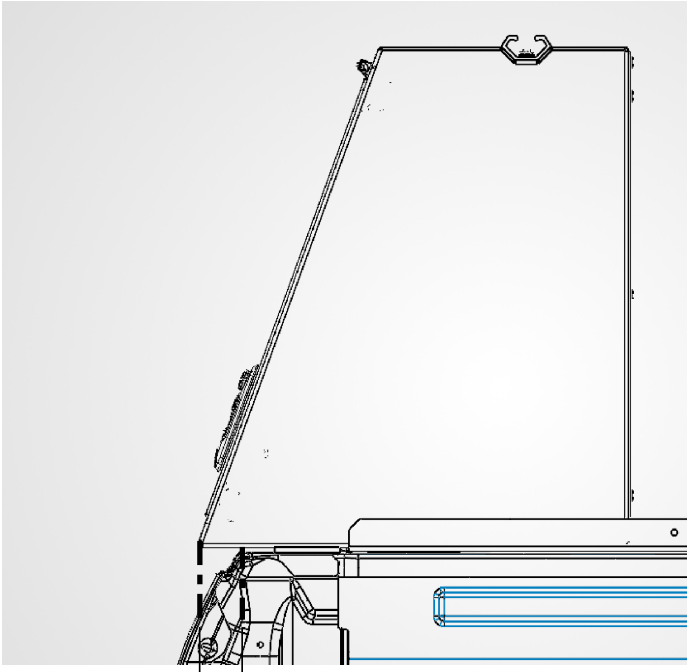

ENSURE THIS DISTANCE IS THE SAME ON BOTH SIDES OF VEHICLE

STEP 6 - INSTALL FASTENERS TO SECURE BOXES TO REAR GUSSET SUPPORTS

Step 6.1
BOLT BOXES TO REAR SUPPORTS FULLY TIGHTEN (4)FAS0248, (4)FAS0164, (4)FAS0688, & (4)FAS0398

9/16 WRENCH
9/16 SOCKET

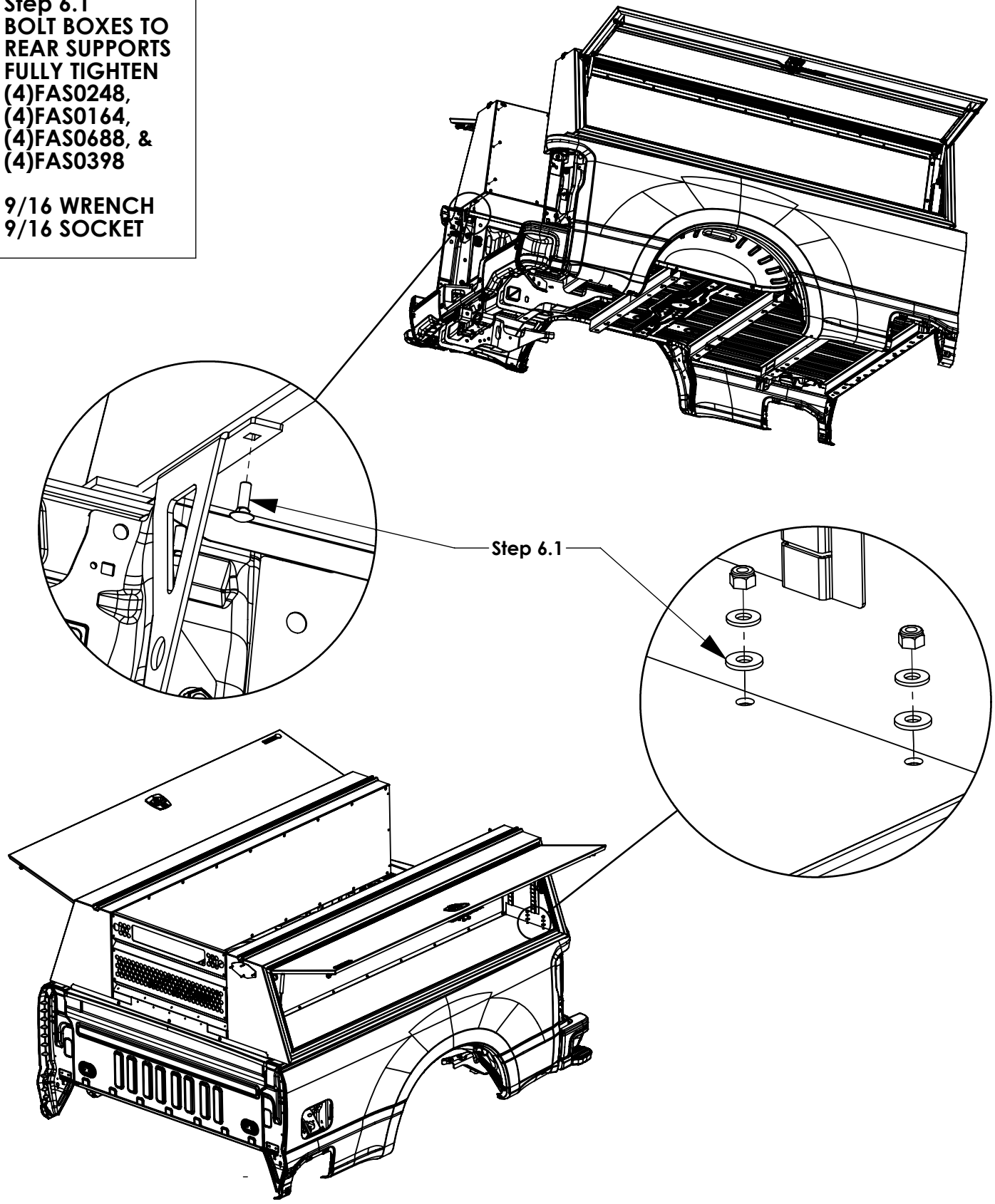

STEP 7 - INSTALL RIVETS AT REAR OF BOXES TO SEAL

Step 7.1
INSTALL RIVET (6)FAS0584 RIVET IN 3 LOCATIONS ON REAR OF EACH BOX

RIVET GUN

REINSTALL TAIL LIGHTS AND FULLY ALL TIGHTEN FASTENERS

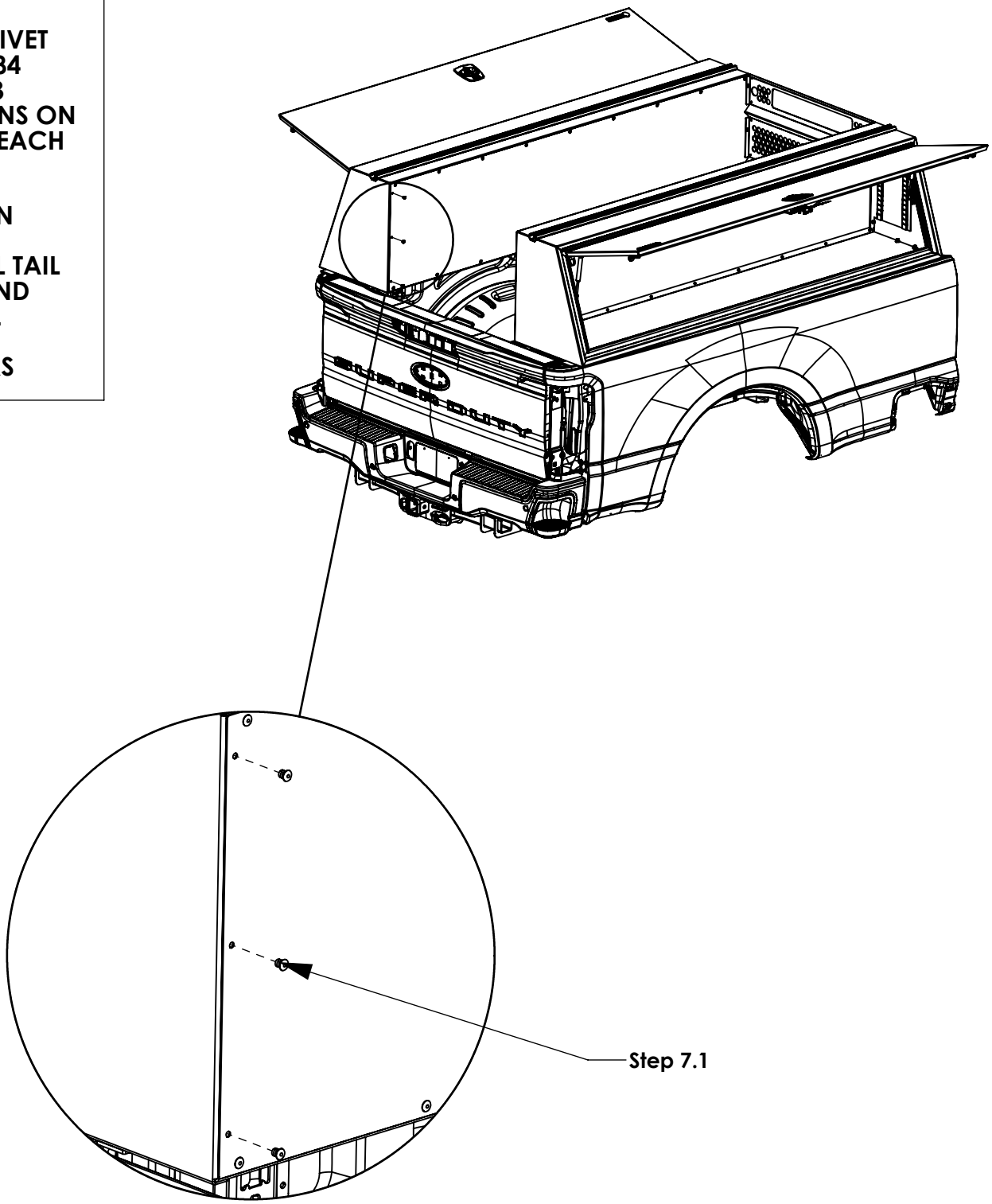

STEP 8 - DRILL BED RAIL MOUNTING HOLES

Step 8.1
IDENTIFY THE CORRECT DRILL JIG FOR THE VEHICLE YOUR REINSTALLING ON

RAM 1/2/3500 - 8'

F-150 - 8'

F-250/350 - 8'

GM 1/2/3500 - 8'

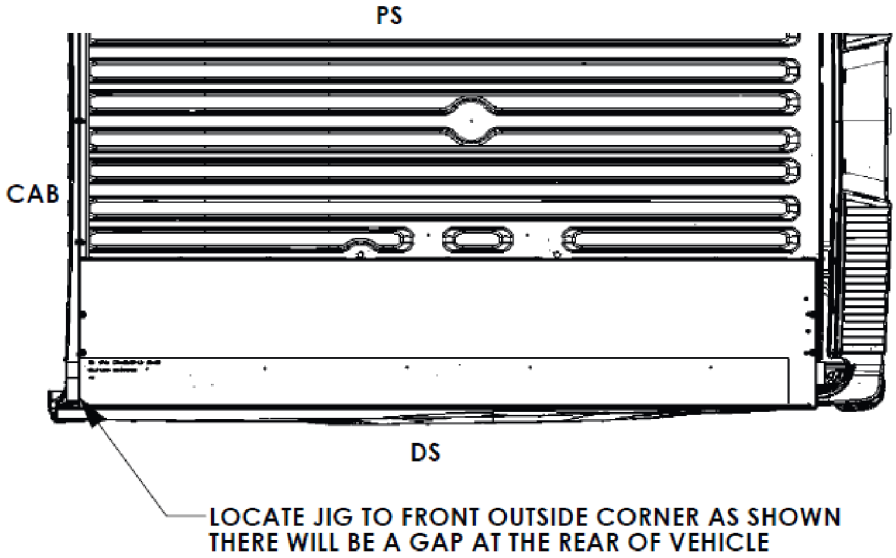

Step 8.2
PLACE JIG IN VEHICLE AS SHOWN. START ON DS

FILP JIG TO MIRROR ON PS

MARK ALL HOLES WITH PAINT PEN

NOTE:
FOR 6' BEDS IGNORE Step 8.1 & 8.2,
USE PAINT PEN TO MARK 4 HOLES EVENLY SPACED IN TOOL BOX AND TRUCK BED RAIL TO DRILL. CONTINUE TO Step 8.3

Step 8.3
USING A STEP BIT OR 3/8 DRILL BIT, DRILL OUT ALL MARKED HOLES ON DS AND PS BED RAIL

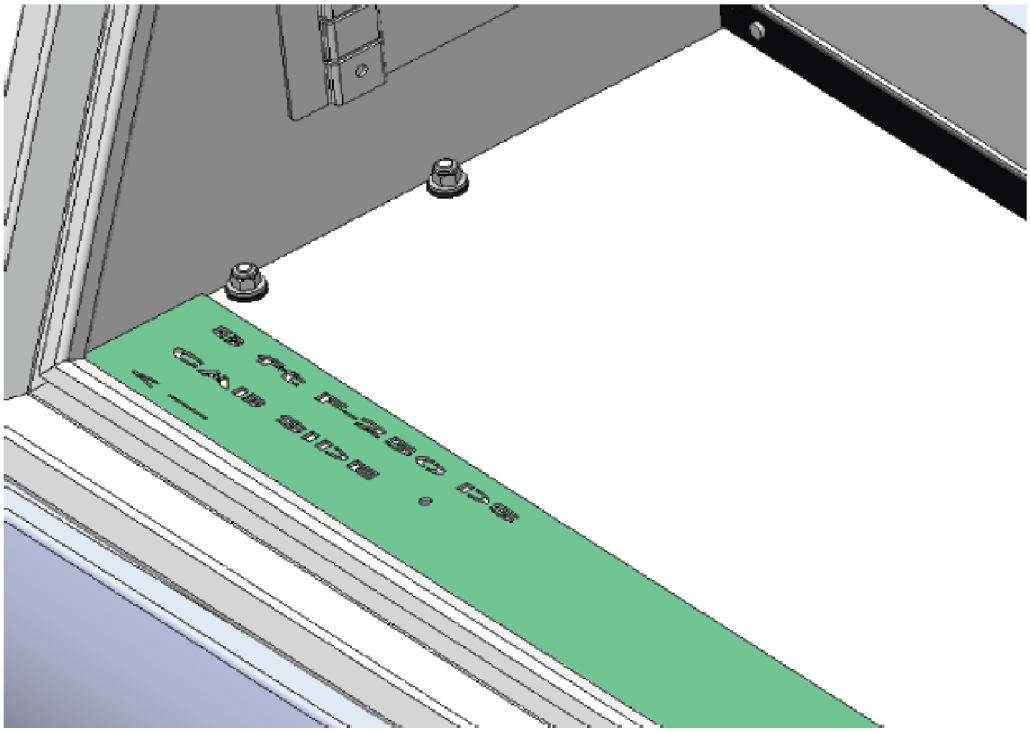

STEP 10 - INSTALL 10 BED RAIL FASTENERS AND FULLY TIGHTEN

Step 10.1
REMOVE JIGS
FULLY TIGHTEN
(10)FAS0242,
(10)FAS0245,
(20)FAS0254 TO
SECURE BOXES
TO BED RAIL

1/2 WRENCH
1/2 SOCKET

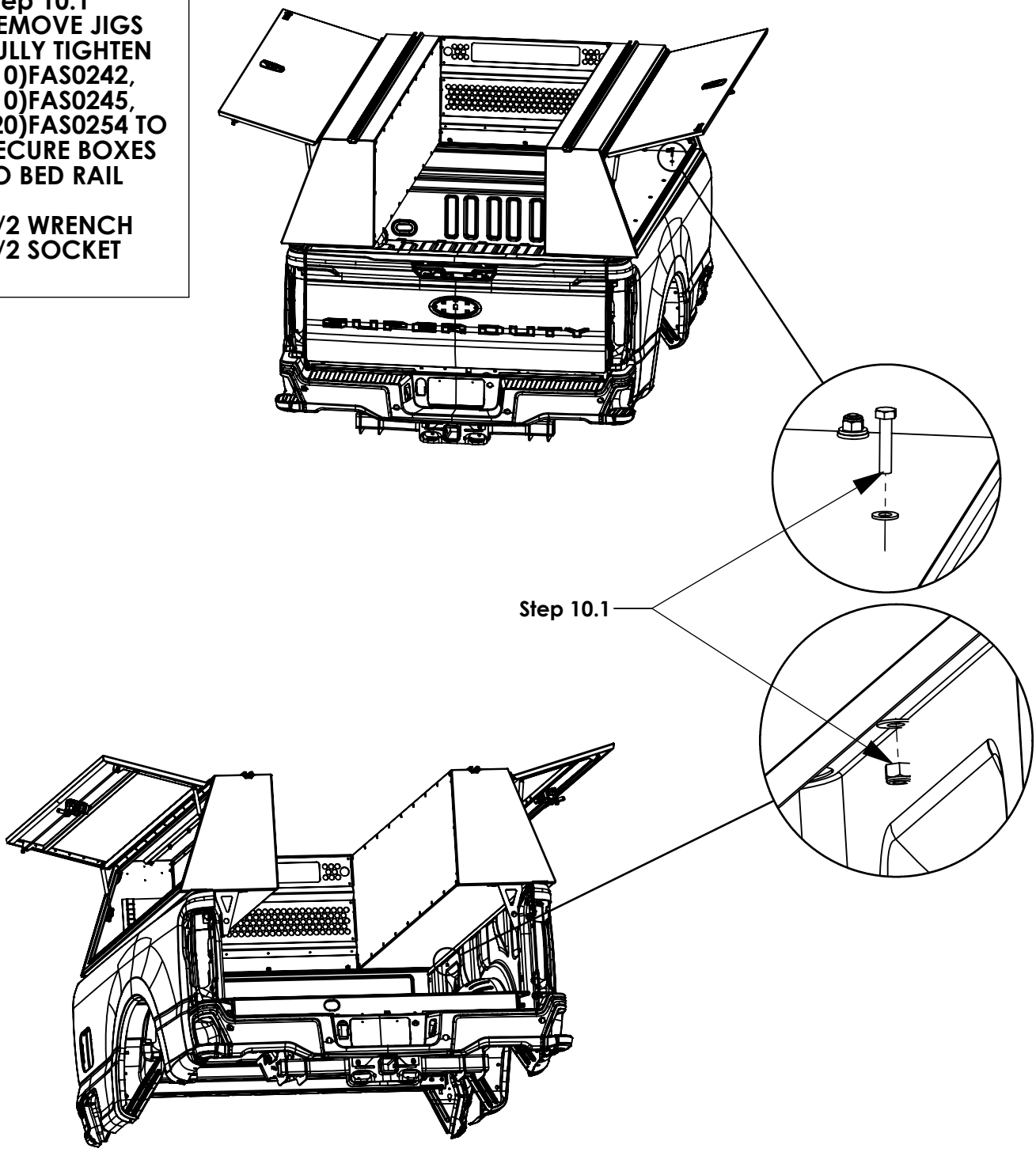

INSTR. NUMBER	PG:	REV:
: 83171	1	A

PART NUMBER : **SEE BOM**

PART DESC. : TSBX KIT WITHOUT GUARD

TSBX-6F1E-NG

ITEM NO.	PART NUMBER	DESCRIPTION	QTY.
1	TS-BOX6	TOP SIDE BOX, 6' ASSEMBLY	2
2	TS-BK6F1	TSBX FORD F-150 6' CAB GUARD/BED BRKT KIT	1
3	81246	KIT,TOPSIDER,6FT,FULL	1
4	81248	CHMSL KIT TSBX	1

NOTE:
FOR KITS WITH CAB GUARD REFER TO
81821 FOR 6' BEDS &
80397 FOR 8' BEDS

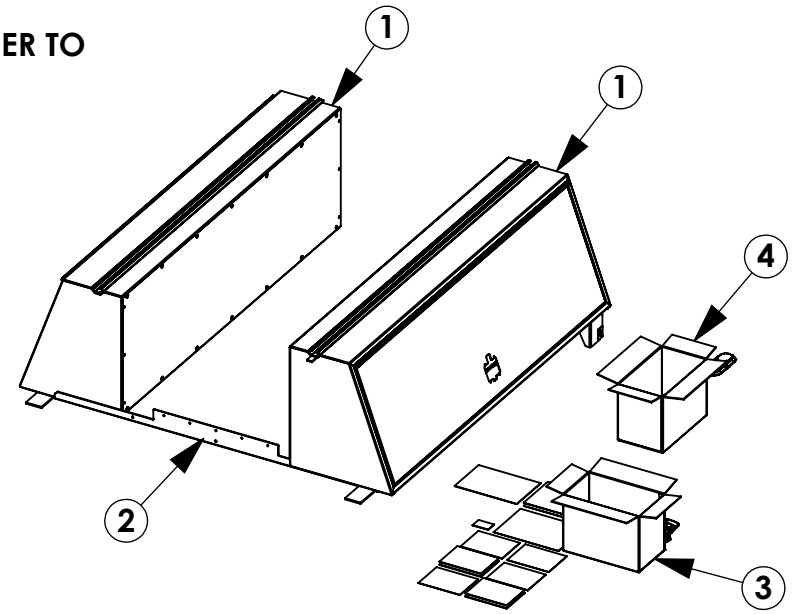

TSBX-8F1E-NG

ITEM NO.	PART NUMBER	DESCRIPTION	QTY.
1	TS-BOX8	TOP SIDE BOX, 8' ASSEMBLY	2
2	TS-BKF2	TSB FORD 8' BED BRKT KIT	1
3	81244	KIT,TOPSIDER,8FT,ELOCK W/LIGHTING	1
4	81248	KIT, TAILGATE CHMSL	1

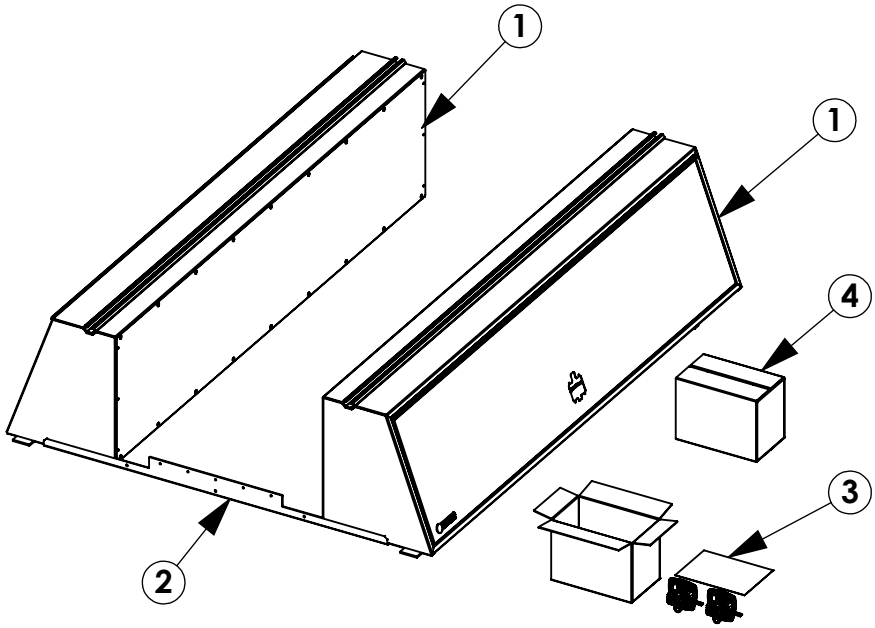

TOOLS NEEDED:

- **1/2 SOCKET**
- **1/2 WRENCH**
- **RIVET GUN**
- **STEP BIT**
- **DRILL**
- **3/8" DRILL BIT**
- **1/2" DRILL BIT**
- **9/16" WRENCH**
- **9/16" SOCKET**

INSTR. NUMBER : 83171	PG: 2	REV: A
PART NUMBER : SEE BOM		
PART DESC. : TSBX KIT WITHOUT GUARD		

TSBX-6F1M-NG

ITEM NO.	PART NUMBER	DESCRIPTION	QTY.
1	TS-BOX6	TOP SIDE BOX, 6' ASSEMBLY	2
2	TS-BK6F1	TSBX FORD F-150 6' CAB GUARD/BED BRKT KIT	1
3	TMLHK2	TSBX MECHANICAL LOCK HATCH KIT	1
4	81248	CHMSL KIT TSBX	1

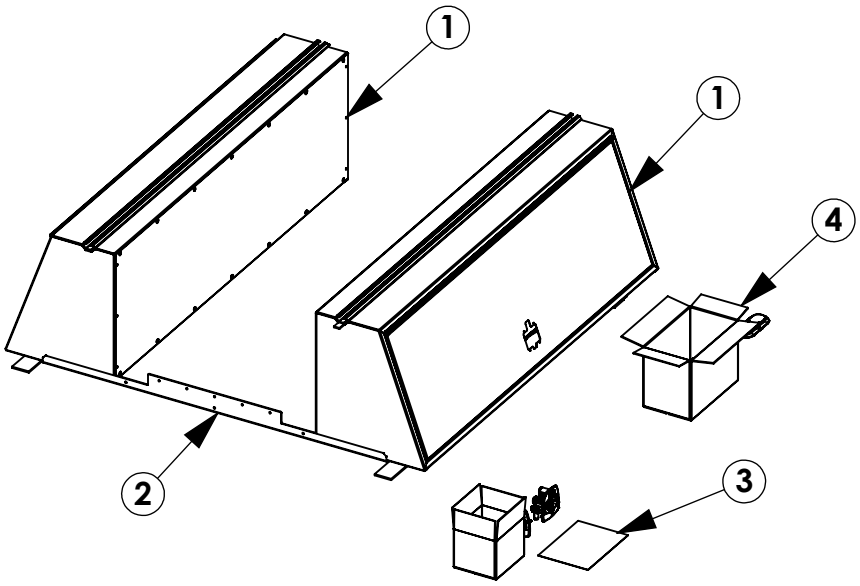

TSBX-8F1M-NG

ITEM NO.	PART NUMBER	DESCRIPTION	QTY.
1	TS-BOX8	TOP SIDE BOX, 8' ASSEMBLY	2
2	TS-BKF2	TSB FORD 8' BED BRKT KIT	1
3	TMLHK2	TSBX MECHANICAL LOCK HATCH KIT	1
4	81248	KIT, TAILGATE CHMSL	1

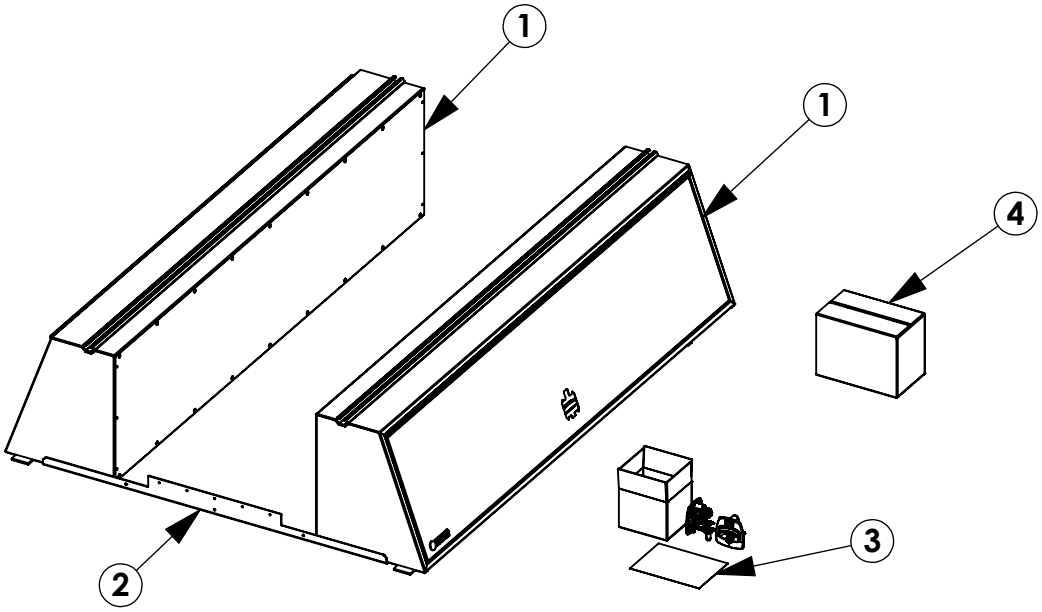

INSTR. NUMBER : 83171	PG: 3	REV: A
PART NUMBER : SEE BOM		
PART DESC. : TSBX KIT WITHOUT GUARD		

TSBX-6F2E-NG

ITEM NO.	PART NUMBER	DESCRIPTION	QTY.
1	TS-BOX6	TOP SIDE BOX, 6' ASSEMBLY	2
2	TS-BK6F2	TSBX, RAM 6' CAB BRK KIT	1
3	81246	KIT,TOPSIDER,6FT,FULL	1
4	81248	CHMSL KIT TSBX	1

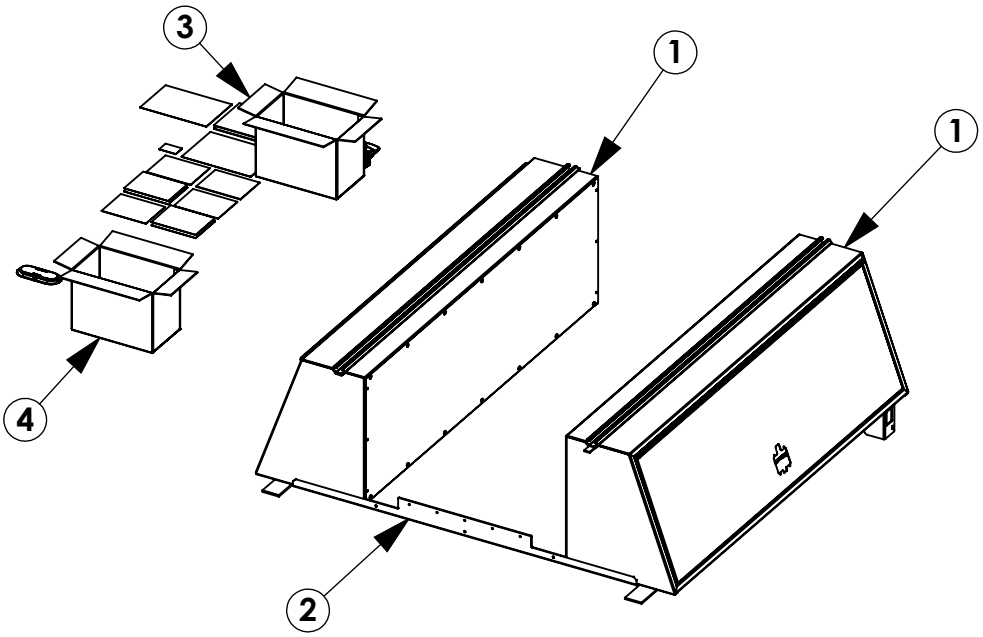

TSBX-8F2E-NG

ITEM NO.	PART NUMBER	DESCRIPTION	QTY.
1	TS-BOX8	TOP SIDE BOX, 8' ASSEMBLY	2
2	TS-BKF2	TSB FORD 8' BED BRKT KIT	1
3	81244	KIT,TOPSIDER,8FT,ELOCK W/LIGHTING	1
4	81248	CHMSL KIT TSBX	1

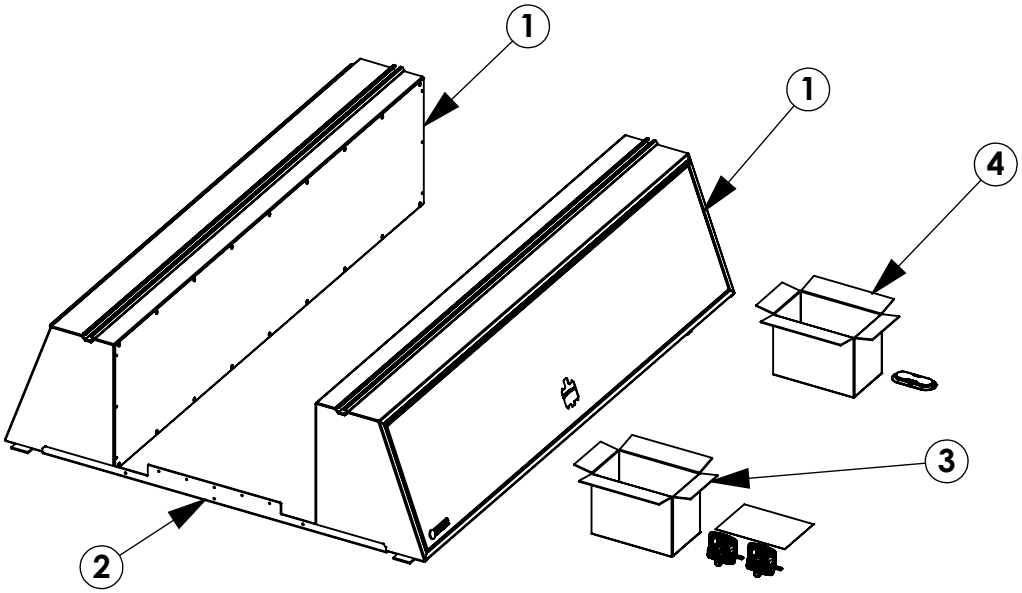

INSTR. NUMBER : 83171	PG: 4	REV: A
PART NUMBER : SEE BOM		
PART DESC. : TSBX KIT WITHOUT GUARD		

TSBX-6F2M-NG

ITEM NO.	PART NUMBER	DESCRIPTION	QTY.
1	TS-BOX6	TOP SIDE BOX, 6' ASSEMBLY	2
2	TS-BK6F2	TSBX, RAM 6' CAB BRK KIT	1
3	TMLHK2	TSBX MECHANICAL LOCK HATCH KIT	1
4	81248	CHMSL KIT TSBX	1

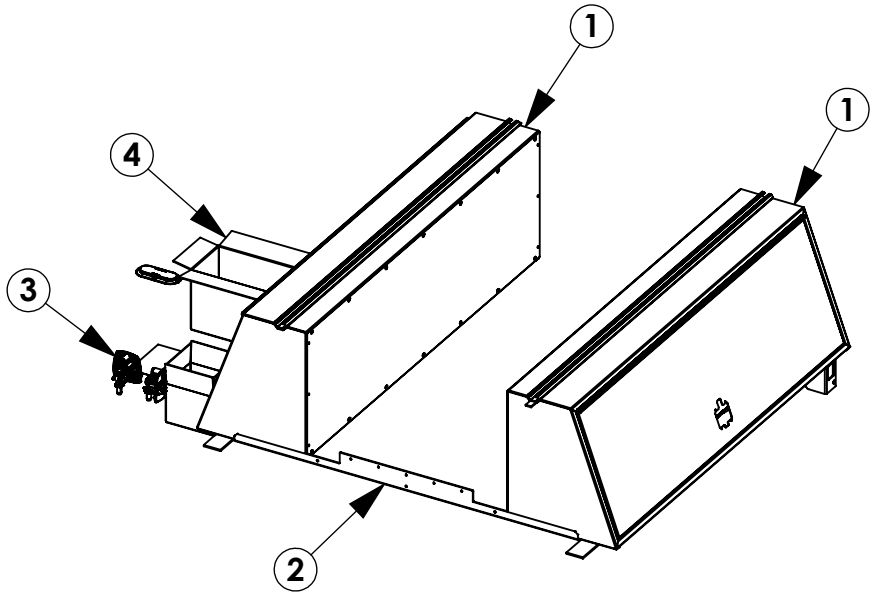

TSBX-8F2M-NG

ITEM NO.	PART NUMBER	DESCRIPTION	QTY.
1	TS-BOX8	TOP SIDE BOX, 8' ASSEMBLY	2
2	TS-BKF2	TSB FORD 8' BED BRKT KIT	1
3	TMLHK2	TSBX MECHANICAL LOCK HATCH KIT	1
4	81248	CHMSL KIT TSBX	1

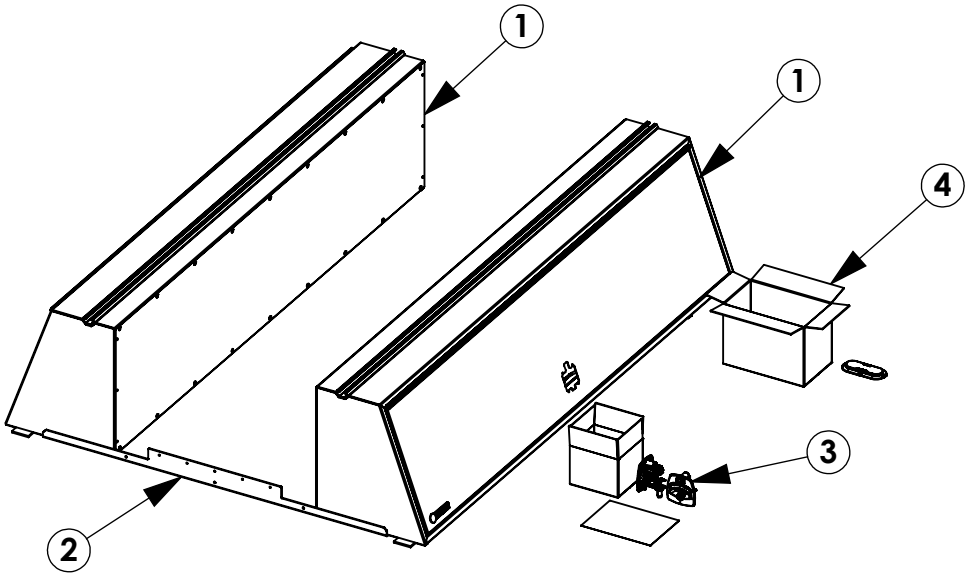

INSTR. NUMBER : 83171	PG: 5	REV: A
PART NUMBER : SEE BOM		
PART DESC. : TSBX KIT WITHOUT GUARD		

TSBX-6G1E-NG

ITEM NO.	PART NUMBER	DESCRIPTION	QTY.
1	TS-BOX6	TOP SIDE BOX, 6' ASSEMBLY	2
2	TS-BK6G1	TSBX, RAM 6' CAB BRK KIT	1
3	81246	KIT,TOPSIDER,6FT,FULL	1
4	81248	CHMSL KIT TSBX	1

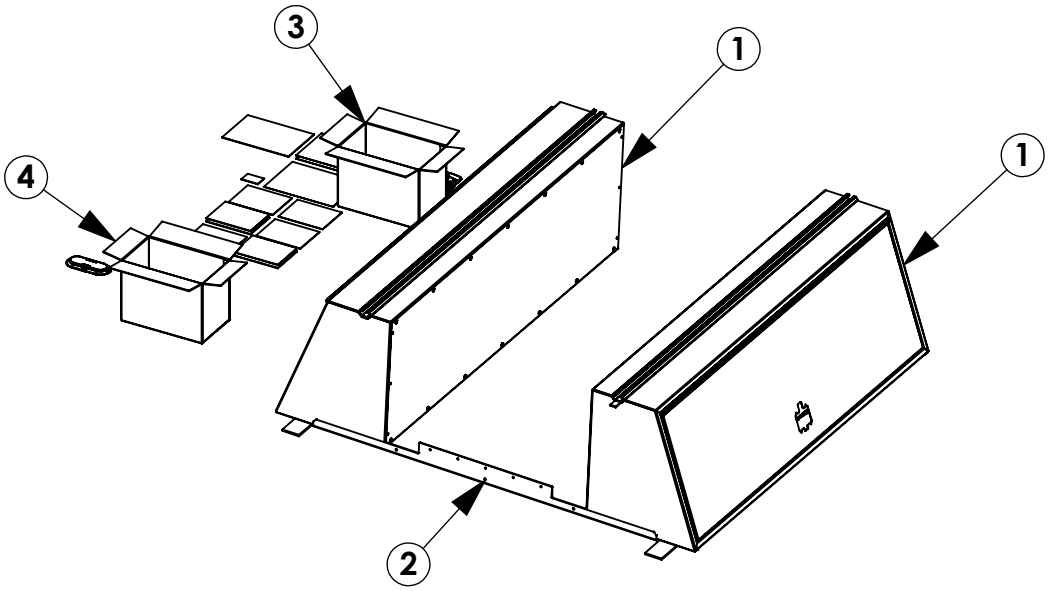

TSBX-8G1E-NG

ITEM NO.	PART NUMBER	DESCRIPTION	QTY.
1	TS-BOX8	TOP SIDE BOX, 8' ASSEMBLY	2
2	TS-BKG2	TSBX, GM 8' BED BRKT KIT	1
3	81244	KIT,TOPSIDER,8FT,ELOCK W/LIGHTING	1
4	81248	KIT, TAILGATE CHMSL	1

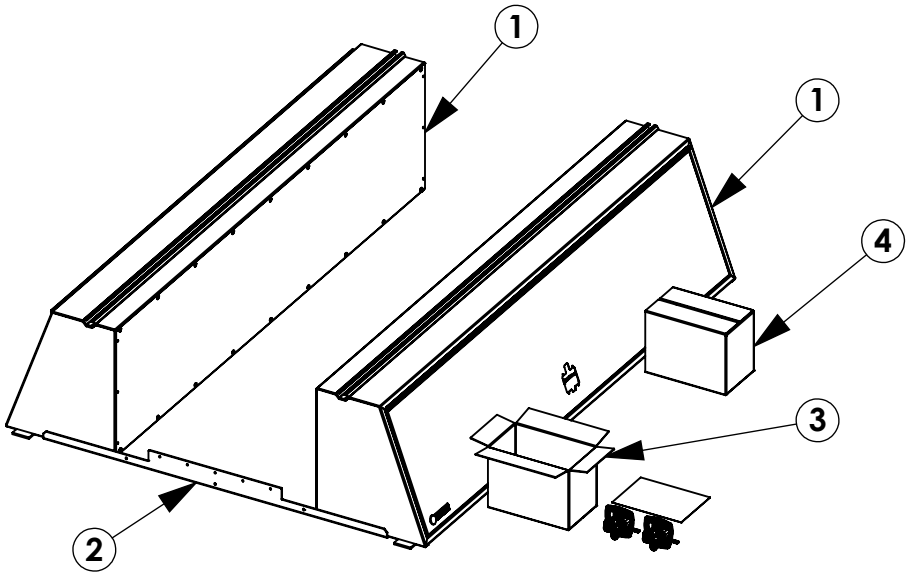

INSTR. NUMBER : 83171	PG: 6	REV: A
PART NUMBER : SEE BOM		
PART DESC. : TSBX KIT WITHOUT GUARD		

TSBX-6G1M-NG

ITEM NO.	PART NUMBER	DESCRIPTION	QTY.
1	TS-BOX6	TOP SIDE BOX, 6' ASSEMBLY	2
2	TS-BK6G1	TSBX, RAM 6' CAB BRK KIT	1
3	TMLHK2	TSBX MECHANICAL LOCK HATCH KIT	1
4	81248	CHMSL KIT TSBX	1

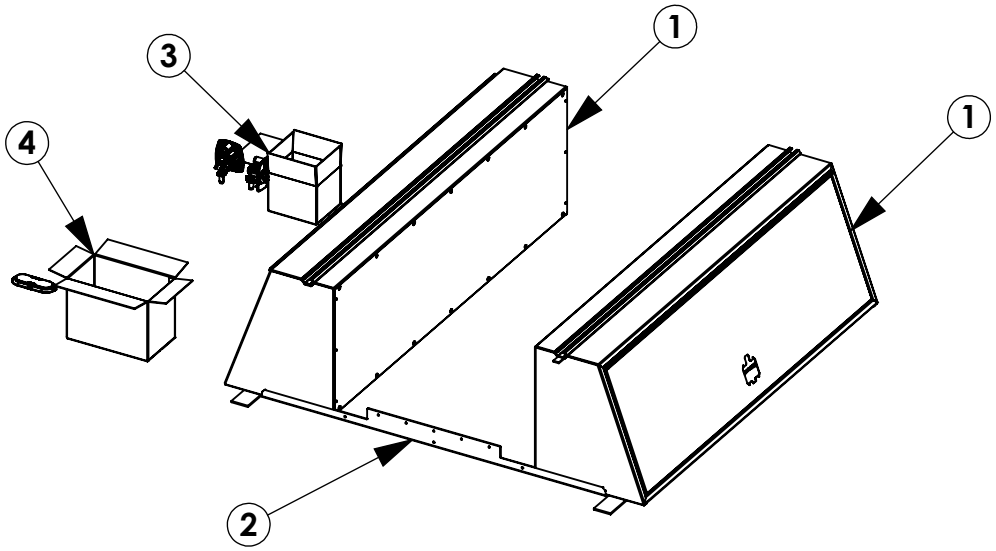

TSBX-8G1M-NG

ITEM NO.	PART NUMBER	DESCRIPTION	QTY.
1	TS-BOX8	TOP SIDE BOX, 8' ASSEMBLY	2
2	TS-BKG2	TSBX, GM 8' BED BRKT KIT	1
3	TMLHK2	TSBX MECHANICAL LOCK HATCH KIT	1
4	81248	KIT, TAILGATE CHMSL	1

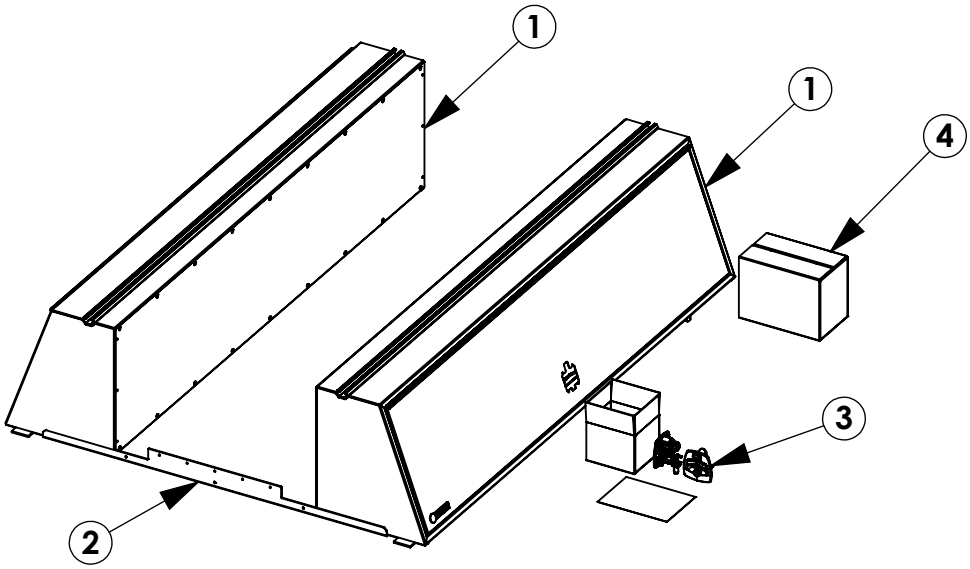

INSTR. NUMBER : 83171	PG: 7	REV: A
PART NUMBER : SEE BOM		
PART DESC. : TSBX KIT WITHOUT GUARD		

TSBX-6G2E-NE

ITEM NO.	PART NUMBER	DESCRIPTION	QTY.
1	TS-BOX6	TOP SIDE BOX, 6' ASSEMBLY	2
2	TS-BK6G2	TSBX, RAM 6' CAB BRK KIT	1
3	81246	KIT,TOPSIDER,6FT,FULL	1
4	81248	CHMSL KIT TSBX	1

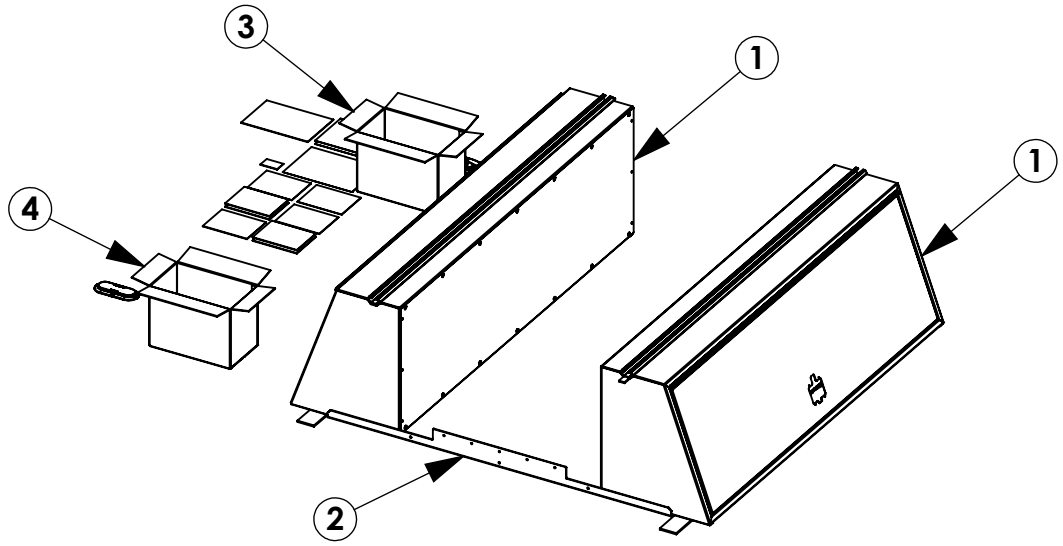

TSBX-8G2E-NG

ITEM NO.	PART NUMBER	DESCRIPTION	QTY.
1	TS-BOX8	TOP SIDE BOX, 8' ASSEMBLY	2
2	TS-BKG2	TSBX, GM 8' BED BRKT KIT	1
3	81244	KIT,TOPSIDER,8FT,ELOCK W/LIGHTING	1
4	81248	CHMSL KIT TSBX	1

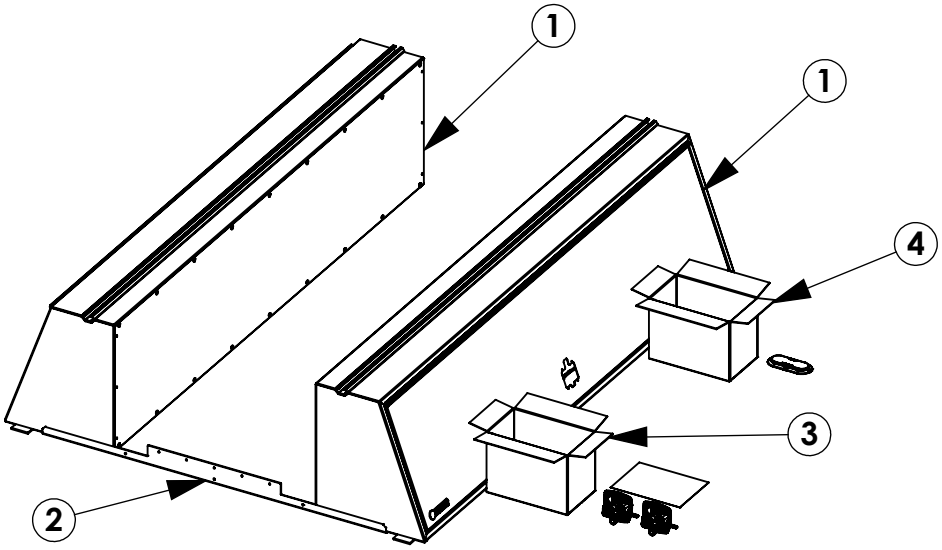

INSTR. NUMBER : 83171	PG: 8	REV: A
PART NUMBER : SEE BOM		
PART DESC. : TSBX KIT WITHOUT GUARD		

TSBX-6G2M-NG

ITEM NO.	PART NUMBER	DESCRIPTION	QTY.
1	TS-BOX6	TOP SIDE BOX, 6' ASSEMBLY	2
2	TS-BK6G2	TSBX, RAM 6' CAB BRK KIT	1
3	TMLHK2	TSBX MECHANICAL LOCK HATCH KIT	1
4	81248	CHMSL KIT TSBX	1

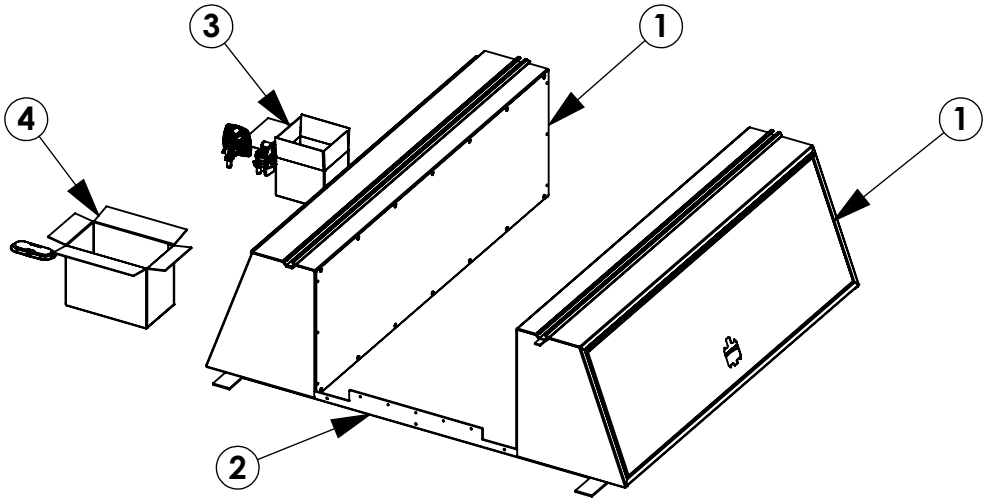

TSBX-8G2M-NG

ITEM NO.	PART NUMBER	DESCRIPTION	QTY.
1	TS-BOX8	TOP SIDE BOX, 8' ASSEMBLY	2
2	TS-BKG2	TSBX, GM 8' BED BRKT KIT	1
3	TMLHK2	TSBX MECHANICAL LOCK HATCH KIT	1
4	81248	KIT, TAILGATE CHMSL	1

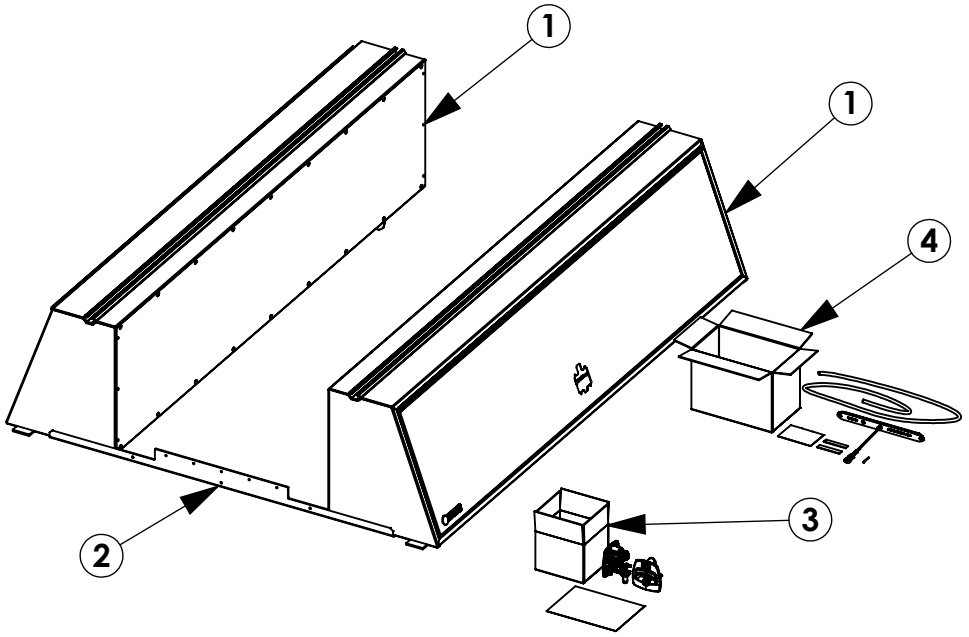

INSTR. NUMBER : 83171	PG: 9	REV: A
PART NUMBER : SEE BOM		
PART DESC. : TSBX KIT WITHOUT GUARD		

TSBX-6R1E-NG

ITEM NO.	PART NUMBER	DESCRIPTION	QTY.
1	TS-BOX6	TOP SIDE BOX, 6' ASSEMBLY	2
2	TS-BK6R1	TSBX, RAM 6' CAB BRK KIT	1
3	81246	KIT,TOPSIDER,6FT,FULL	1
4	81248	CHMSL KIT TSBX	1

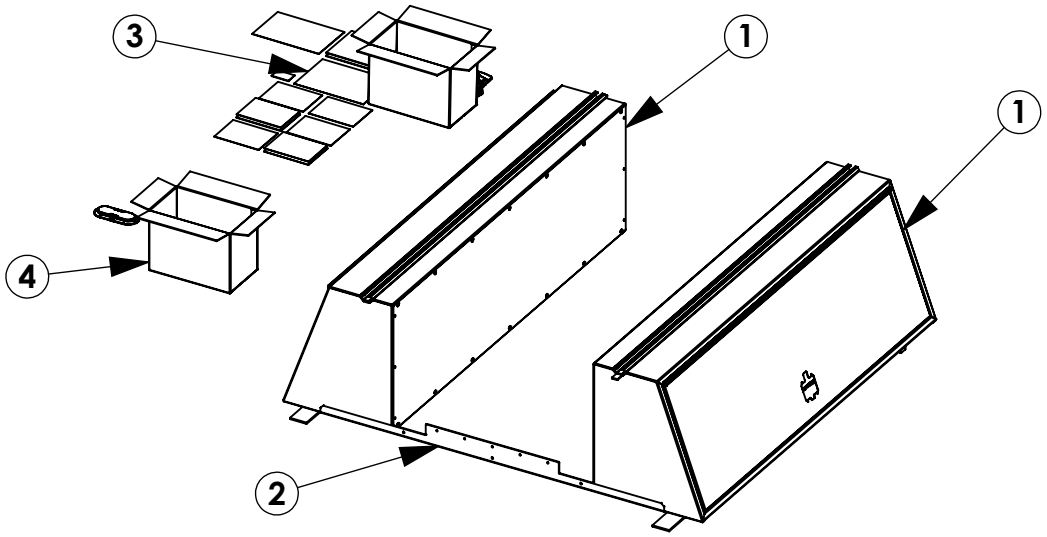

TSBX-8R1E-NG

ITEM NO.	PART NUMBER	DESCRIPTION	QTY.
1	TS-BOX8	TOP SIDE BOX, 8' ASSEMBLY	2
2	TS-BKR2	TSBX, RAM 8' BED BRKT KIT	1
3	81244	KIT,TOPSIDER,8FT,ELOCK W/LIGHTING	1
4	81248	KIT, TAILGATE CHMSL	1

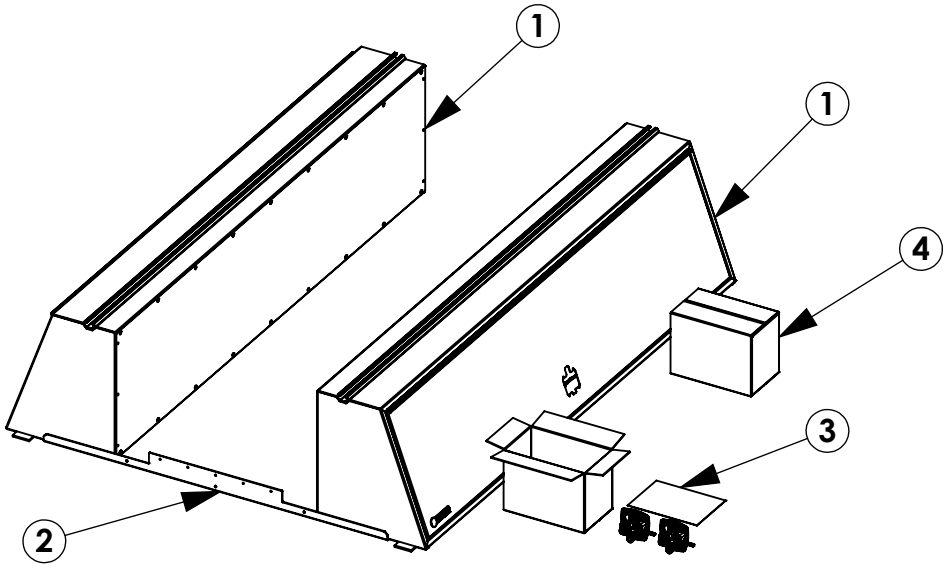

INSTR. NUMBER : 83171	PG: 10	REV: A
PART NUMBER : SEE BOM		
PART DESC. : TSBX KIT WITHOUT GUARD		

TSBX-6R1M-NG

ITEM NO.	PART NUMBER	DESCRIPTION	QTY.
1	TS-BOX6	TOP SIDE BOX, 6' ASSEMBLY	2
2	TS-BK6R1	TSBX, RAM 6' CAB BRK KIT	1
3	TMLHK2	TSBX MECHANICAL LOCK HATCH KIT	1
4	81248	CHMSL KIT TSBX	1

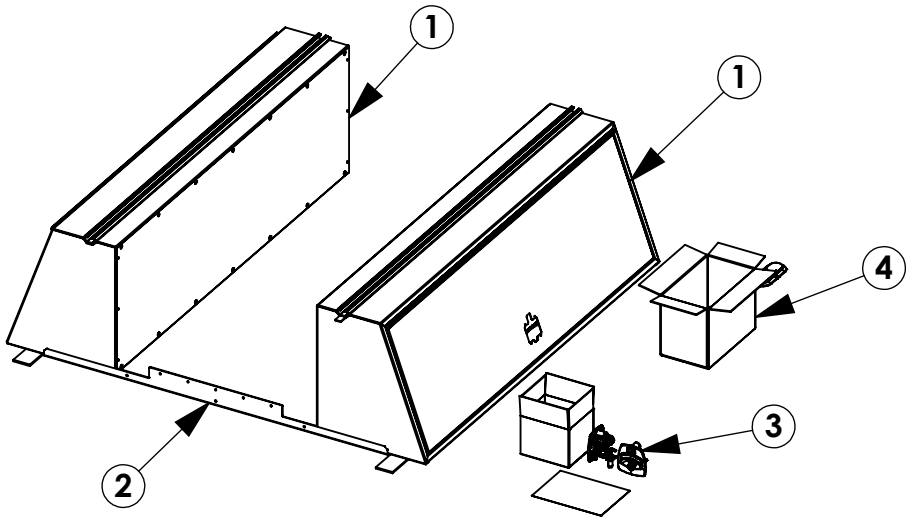

TSBX-8R1M-NG

ITEM NO.	PART NUMBER	DESCRIPTION	QTY.
1	TS-BOX8	TOP SIDE BOX, 8' ASSEMBLY	2
2	TS-BKR2	TSBX, RAM 8' BED BRKT KIT	1
3	TMLHK2	TSBX MECHANICAL LOCK HATCH KIT	1
4	81248	KIT, TAILGATE CHMSL	1

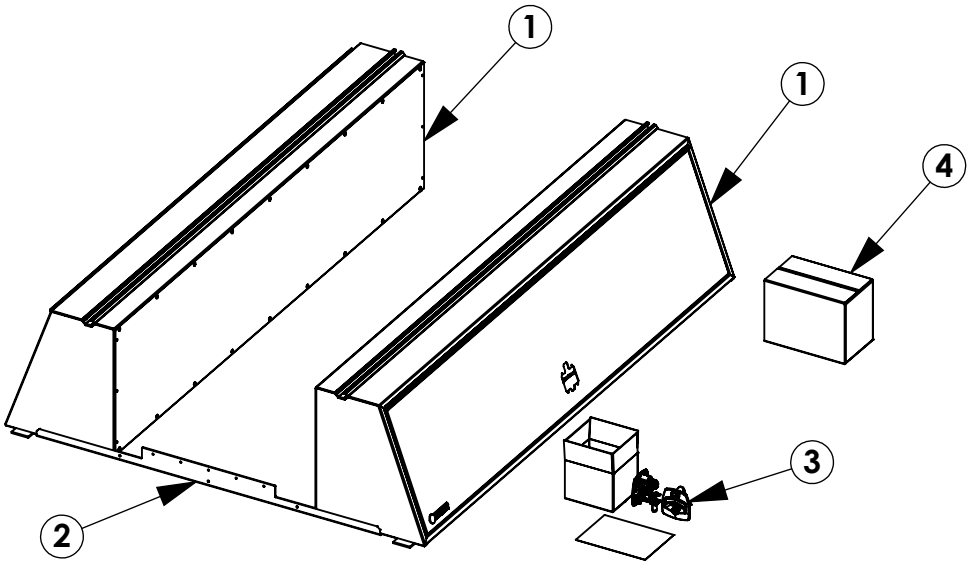

INSTR. NUMBER : 83171	PG: 11	REV: A
PART NUMBER : SEE BOM		
PART DESC. : TSBX KIT WITHOUT GUARD		

TSBX-8R2E-NG

ITEM NO.	PART NUMBER	DESCRIPTION	QTY.
1	TS-BOX8	TOP SIDE BOX, 8' ASSEMBLY	2
2	TS-BKR2	TSBX, RAM 8' BED BRKT KIT	1
3	81244	KIT,TOPSIDER,8FT,ELOCK W/LIGHTING	1
4	81248	CHMSL KIT TSBX	1

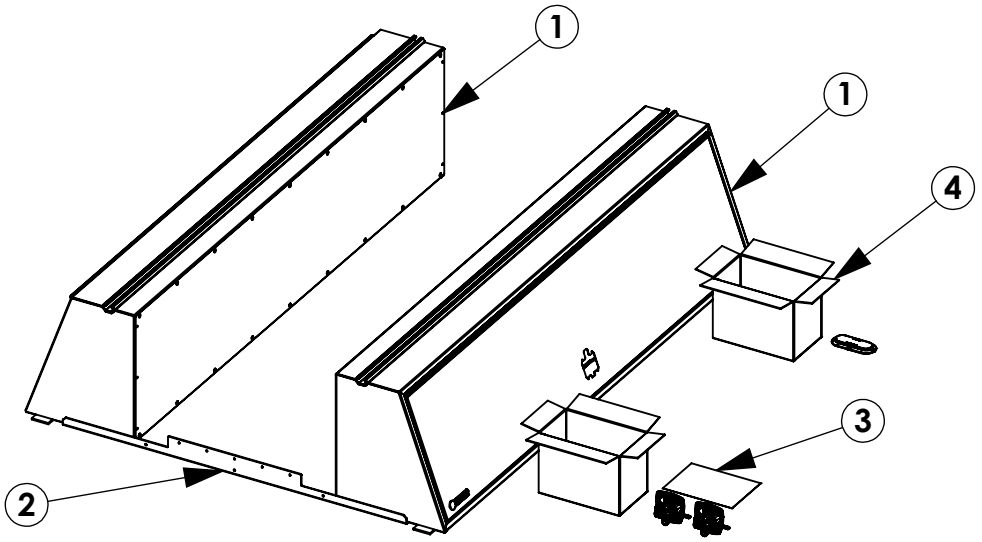

TSBX-8R2M-NG

ITEM NO.	PART NUMBER	DESCRIPTION	QTY.
1	TS-BOX8	TOP SIDE BOX, 8' ASSEMBLY	2
2	TS-BKR2	TSBX, RAM 8' BED BRKT KIT	1
3	TMLHK2	TSBX MECHANICAL LOCK HATCH KIT	1
4	81248	CHMSL KIT TSBX	1

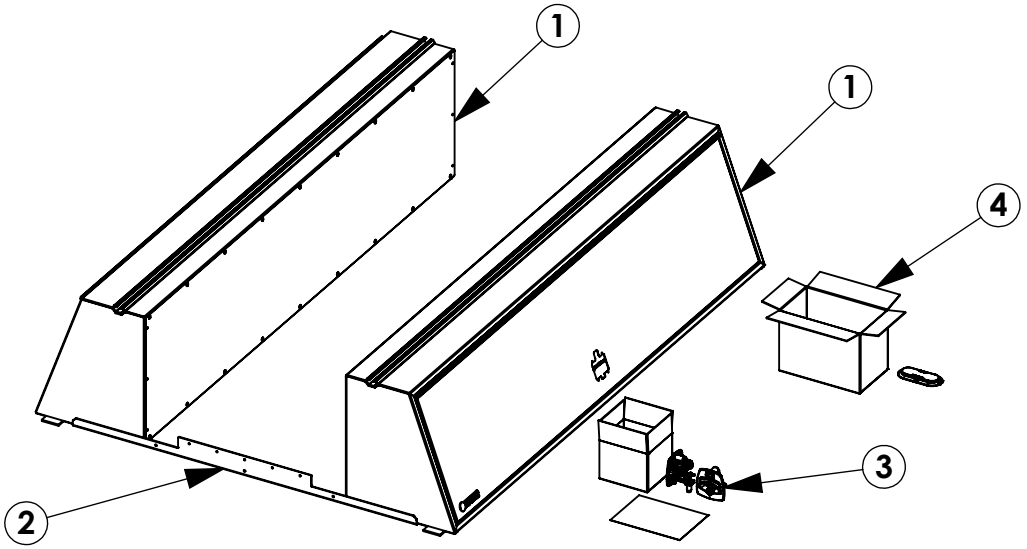

BEST PRACTICES

GET TO KNOW THE VEHICLE - AT THE BEGINNING OF ANY INSTALLATION, CHECK THE LOCATION OF THE FUEL TANK, FUEL LINES, BRAKE LINES, HIGH VOLTAGE BATTERIES AND WIRING HARNESSES TO AVOID INJURY OR PROPERTY DAMAGE FROM TOOL CONTACT.

SEAL ALL EXTERIOR HOLES - ALL INSTALLATION HOLES SHOULD BE SEALED WITH BUTYL TAPE OR SILICON TO PREVENT WATER AND EXHAUST GASES FROM ENTERING THE VEHICLE.

CONTROL DRILL DEPTH - TO AVOID DAMAGE TO THE VEHICLE, USE A DRILL STOP OR CLEARED STEP BIT WHEN DRILLING INSTALLATION HOLES.

ALWAYS ADD PRIMER - WHEN ADDING INSTALLATION HOLES BE SURE TO USE A SELF-ETCHING PRIMER TO PREVENT CORROSION, FASTENER FAILURE AND INJURY.

MOUNTING POINTS MUST HAVE METAL-TO-METAL CONTACT - USE PROVIDED MOUNTING SPACERS TO ACCOMMODATE FOR VEHICLE FEATURES, CARPET OR SUBFLOORS.

PROVIDE CLEARANCE FOR SPACERS - IF THE INSTALLATION VEHICLE CONTAINS A CARPET OR SUBFLOOR, USE A 1-3/16" DIAMETER CARPET CUTTER (P/N: 31183-0) AT ALL MOUNTING LOCATIONS TO OPEN UP ROOM FOR SPACERS.

CHECK SPACER ORIENTATION - BE SURE THAT THE INDENT IN THE SPACER COVERS THE PLUSNUT HEAD; THIS ENSURES THE MOST METAL-TO-METAL CONTACT AND REDUCES VIBRATION.

PLUSNUT INSTALLATION - A PLUSNUT GUN IS RECOMMENDED FOR PLUSNUT INSTALLATION FOR ITS PRODUCTION SPEED. HOWEVER, A PLUSNUT SETTING TOOL CAN ALSO BE USED (P/N: 22200-0).

THRU-BOLT CLEARANCE - WHEN USING A THRU-BOLT AT ANY MOUNTING LOCATION, BE SURE THAT YOUR HOLE HAS 1/16" CLEARANCE.

BEST PRACTICE: ORGANIZE ALL FASTENERS & VERIFY THAT ALL ARE ACCOUNTED FOR

FASTENERS USED

BAG REFERENCE: **BAG80398**

ITEM NO.	PART NUMBER	DESCRIPTION	QTY.
1	FAS0092	SCREW, HEX HD, 5/16-18X1.50 ZN PLATE, G8	4
2	FAS0091	PLUSNUT, 5/16	4
3	FAS0398	BOLT,CRG 5/16-18X1.0 SS	8
4	FAS1025	HHCS FLNG 1/2"-13, 1-1/2" 18-8 SS	2
5	26618-0	SILICONE SEALANT	1
6	FAS0552	WASHER, FLAT, 5/16, SST	8
7	FAS0688	EPDM WASHER	8
8	FAS0940	SCREW, BHTX 1/4-20X1 SS NP	9
9	FAS0584 UNCRIMPED	RIVET, BLIND, DOMEHEAD, 1/4 X .25 GRIP	12
10	FAS0242	SCREW, HEX HD, 5/16-18X1.50 STAINLESS STEEL	10

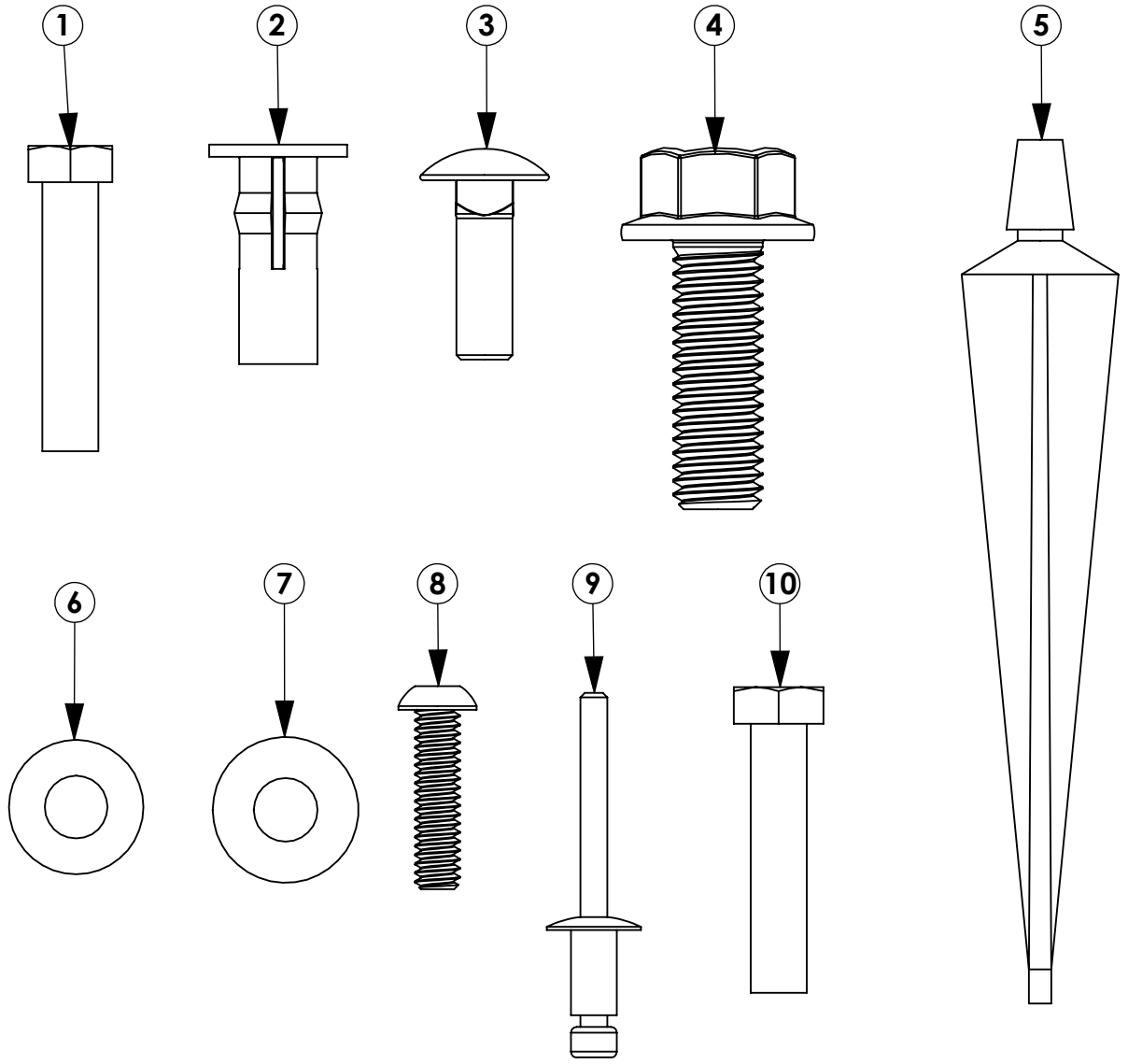

CONTINUE ON NEXT FASTENER PAGE

INTENTIONALLY LEFT BLANK

BEST PRACTICE: ORGANIZE ALL FASTENERS & VERIFY THAT ALL ARE ACCOUNTED FOR

FASTENERS USED

BAG REFERENCE: **BAG80398**

ITEM NO.	PART NUMBER	DESCRIPTION	QTY.
11	FAS1026	NUT, HEX NLK FLG 1/2-13 SS	2
12	FAS0248	NUT, NYLON INSERT LOCK, 5/16-18 SST	18
13	FAS0098	WASHER, LOCK, SPLIT, 5/16, ZINC PLATE	4
14	FAS0086	WASHER,FLAT USS 5/16 ZP	4
15	FAS0055	NUT,HEX NLK FLG 1/4-20 ZP	9
16	FAS0334	WASHER,FLAT 1/2 SS	2
17	FAS0245	WASHER, FLAT, 5/16 HRD, ZN	20
18	FAS0234	WASHER, FLAT, 1/4, SST	9
19	FAS0164	WASHER,FLAT,SAE,5/16,ALUM	10

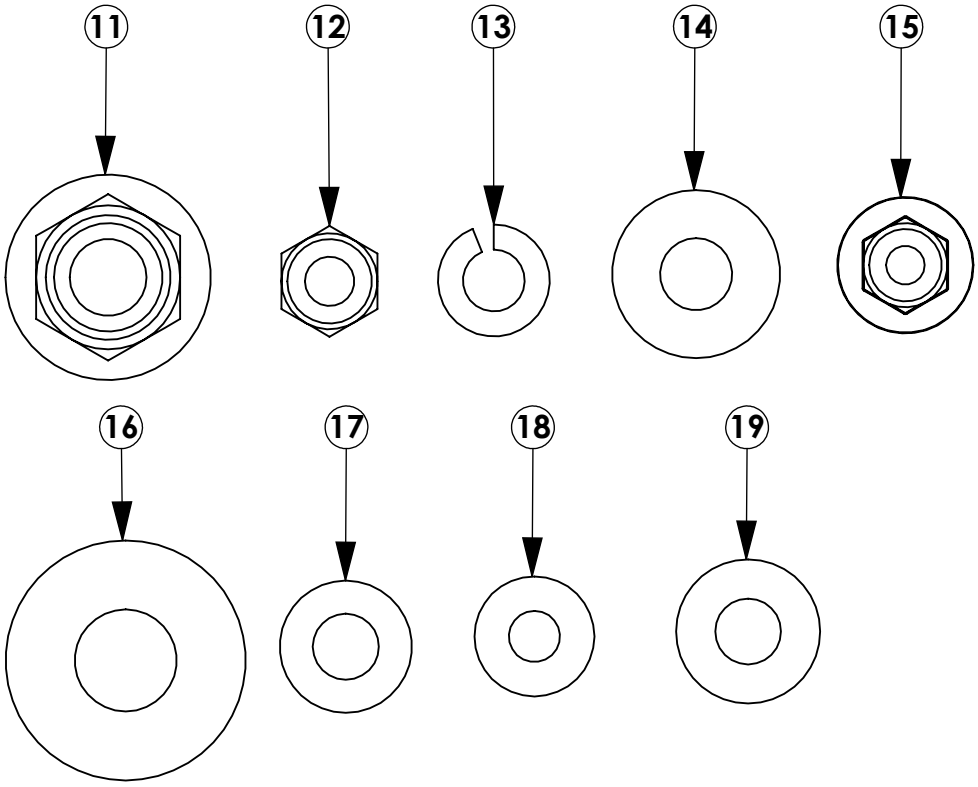

INTENTIONALLY LEFT BLANK

STEP 1 - DETERMIN WHICH BOX WILL BE THE PS AND DS SIDE - THESE BOXES WILL SHIP FROM ASC SYMETRICAL

Step 1.1
IDENTIFY WHAT SIDE OF THE BOX WILL BE FACING FORWARD AND REARWARD ON THE VEHICLE.

Step 1.2
FULLY TIGHTEN FAS0000 AND FAS0000 TO SECURE MECHANICAL AND ELECTRICAL LOCK TO DOOR. SEE LATCH INSTRUCTION FOR MORE DETAIL

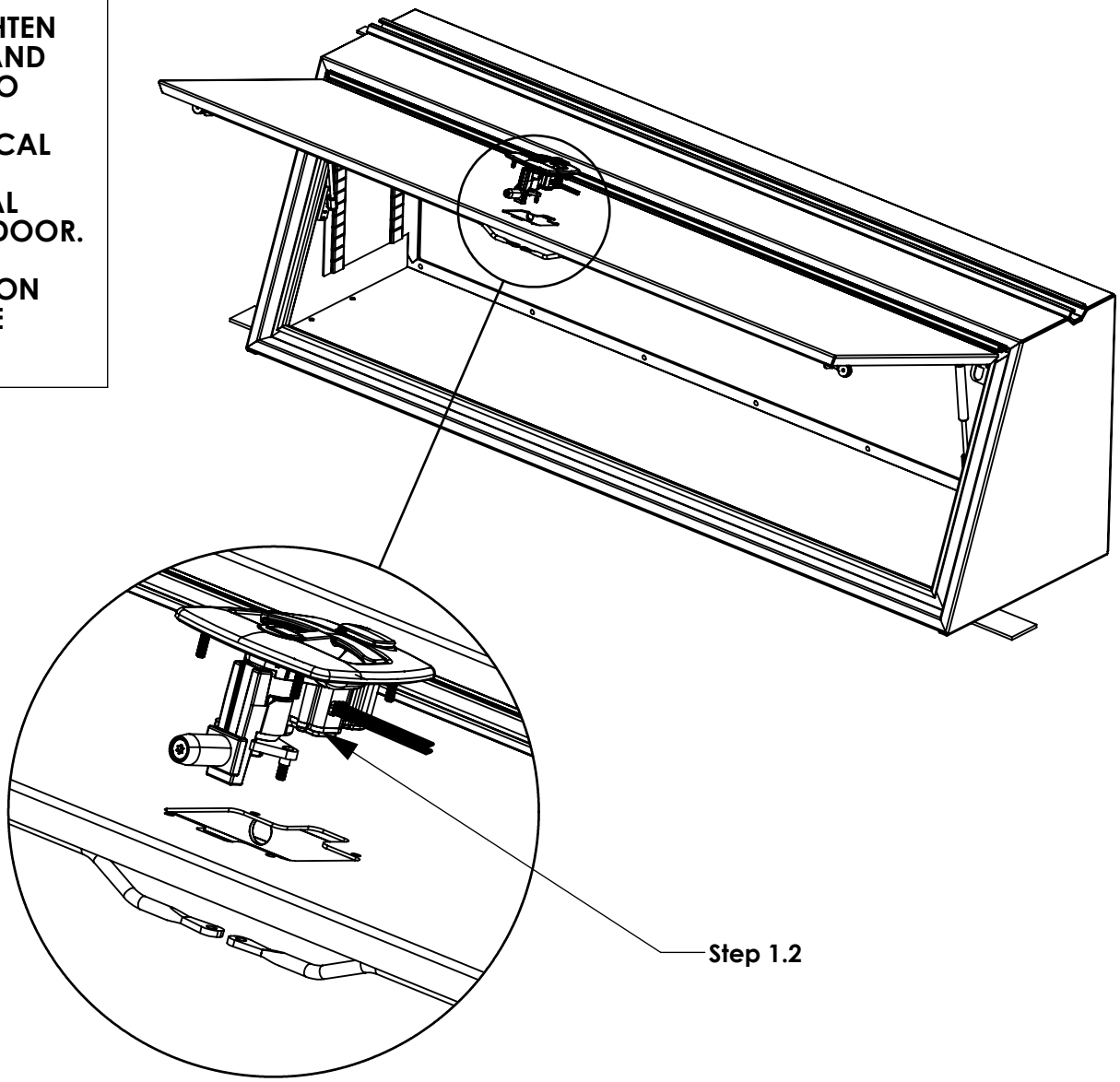

STEP 2.1 - PREP BED (F-150)

Step 2.1.1
LOCATE THE BED SUPPORT BRACKETS IN TS-BK BOX, THESE ARE VEHICLE SPECIFIC.

MAKE SURE THE PARTS YOU HAVE MATCH BOM FOR YOUR VEHICLE.

Step 2.1.2
REMOVE THE TAIL LIGHTS TO GAIN ACESS TO MOUNTING HOLE SHOWN.

DO NOT REINSTALL TAIL LIGHT UNTIL END OF INSTALL

Step 2.1.3
INSTALL REAR BRACKETS. HAND TIGHTEN (4)FAS0092, (4)FAS0098, (4)FAS0086

1/2 WRENCH
1/2 SOCKET

FULLY TIGHTEN AFTER STEP 7.1

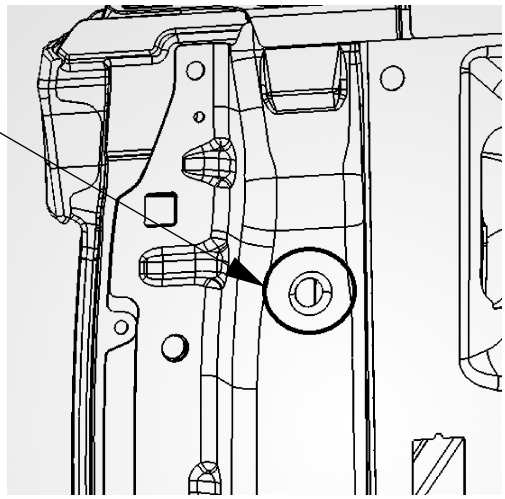

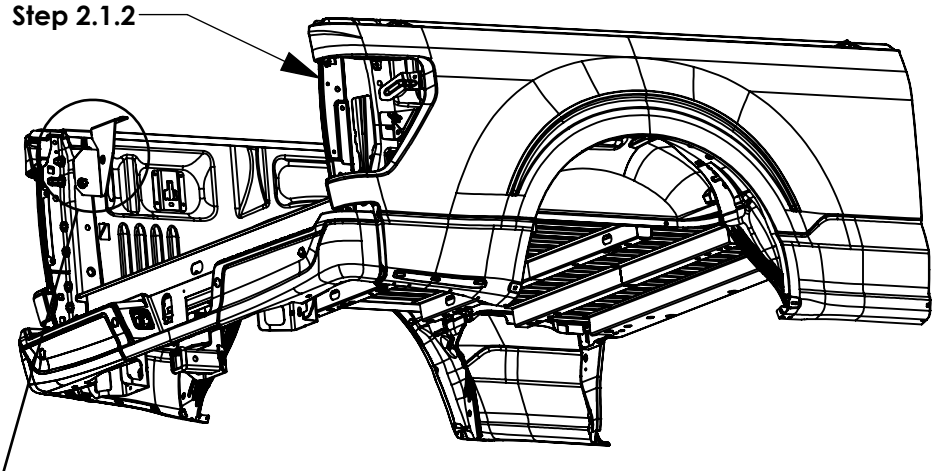

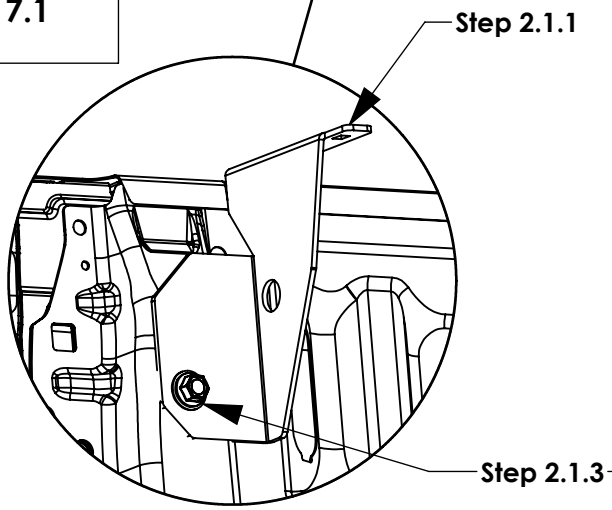

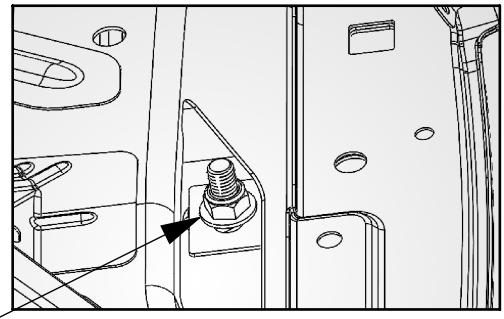

VIEW FROM INSIDE TAIL LIGHT

STEP 2.2 - PREP BED (F-250)

Step 2.2.1
LOCATE THE BED SUPPORT BRACKETS IN TS-BK BOX, THESE ARE VEHICLE SPECIFIC.

MAKE SURE THE PARS YOU HAVE MATCH BOM FOR YOUR VEHICLE.

Step 2.2.2
ALIGN UPPER HOLE ON BED BRACKET TO OEM HOLE IN F-250 BED,

MARK BOTTOM HOLE.

DRILL OUT OEM HOLE TO 1/2"

DRILL MARKED HOLE TO 1/2"

1/2" DRILL BIT
DRILL

Step 2.2.3
SET (4)FAS0091 INTO DRILL HOLES

PLUSNUT TOOL

Step 2.2.4
INSTALL REAR BRACKETS. HAND TIGHTEN (4)FAS0092, (4)FAS0098, (4)FAS0086

1/2 WRENCH
1/2 SOCKET

FULLY TIGHTEN AFTER STEP 7.1

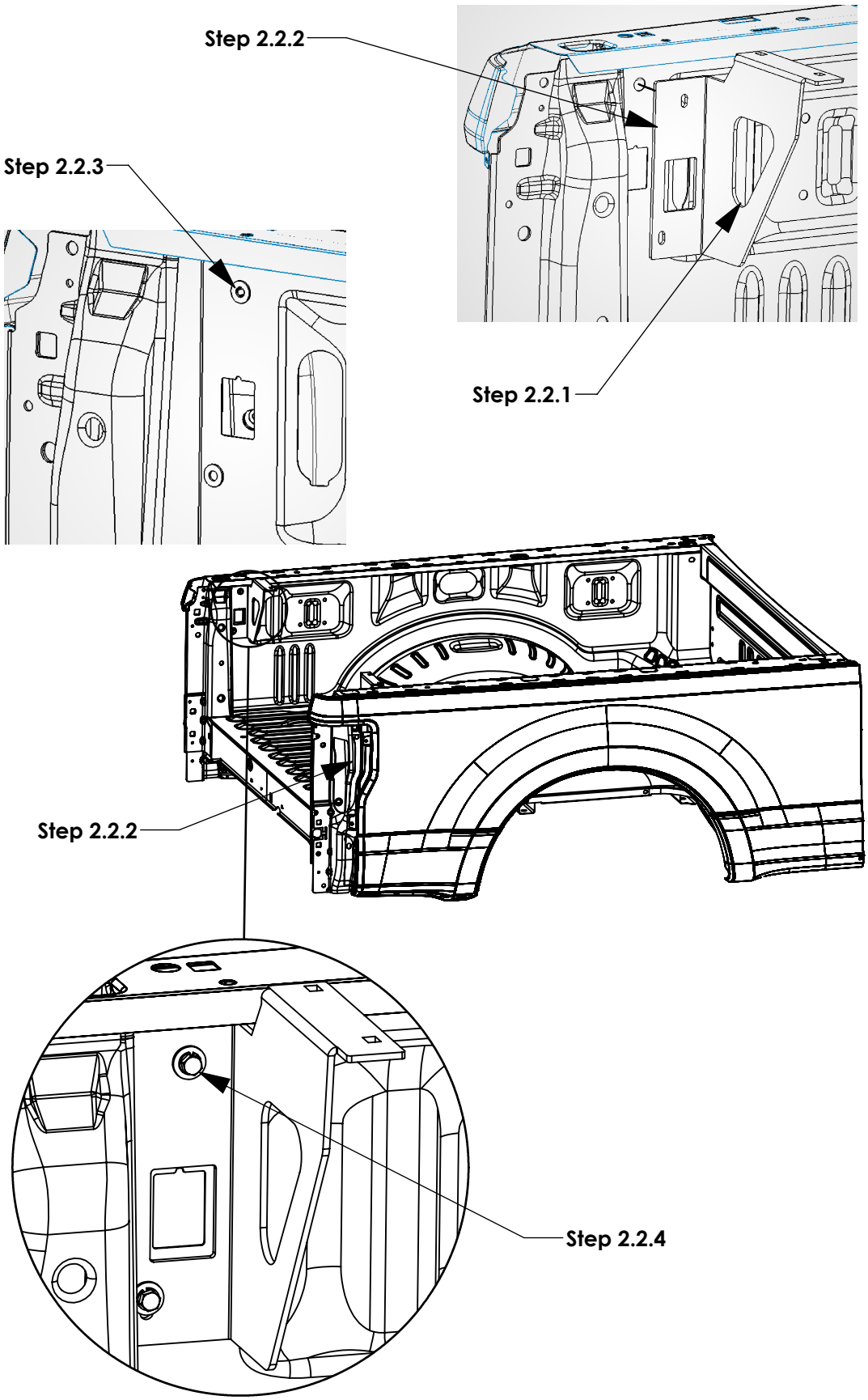

STEP 2.3 - PREP BED (RAM 6 FT)

Step 2.3.1
LOCATE THE BED SUPPORT BRACKETS IN TS-BK BOX, THESE ARE VEHICLE SPECIFIC.

MAKE SURE THE PARS YOU HAVE MATCH BOM FOR YOUR VEHICLE.

Step 2.3.2
FOR RAM VEHICLE, ALIGN HOLE ON BRACKET TO HOLEIN RAM BED DRILL OUT OEM HOLE TO 1/2"

1/2" DRILL BIT
DRILL

Step 2.3.3
SET (4)FAS0091 INTO DRILLED OUT HOLES

PLUSNUT TOOL

Step 2.3.4
INSTALL REAR BRACKETS. HAND TIGHTEN AND FULLY TIGHTEN AT END OF INSTALL PRIOR TO REINSTALLING TAIL LIGHT,

FULLY TIGHTEN AFTER STEP X.X
(2)FAS1025,
(2)FAS1026
(2)FAS0334

1/2 WRENCH
1/2 SOCKET

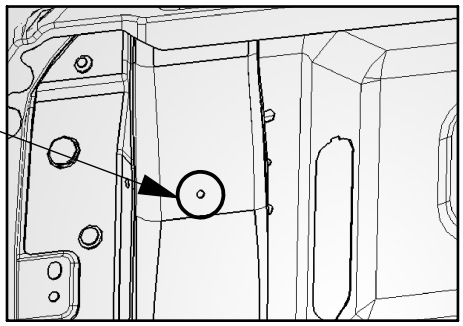

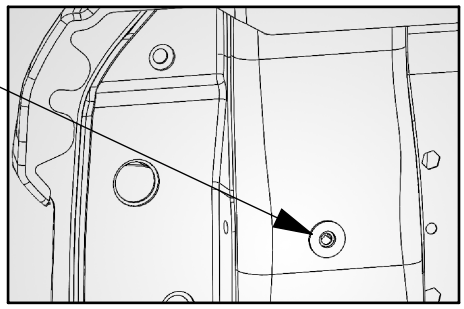

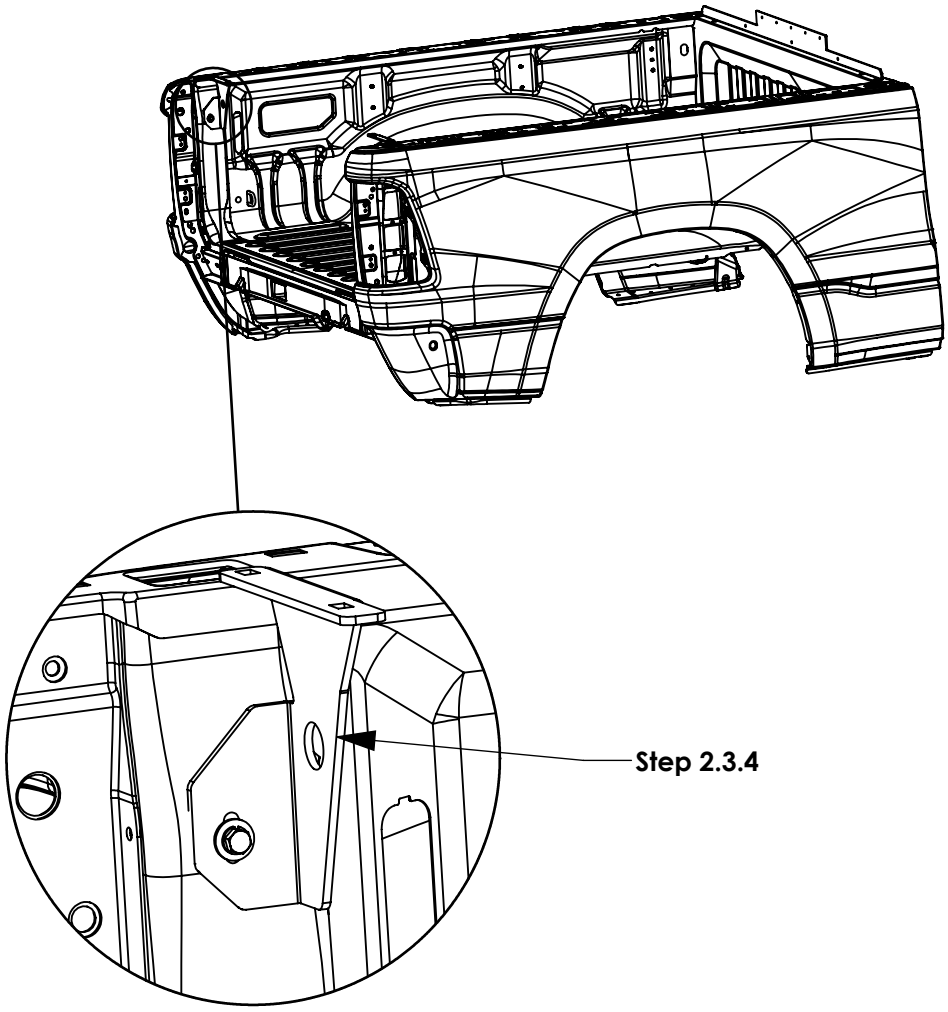

STEP 2.4 - PREP BED (RAM 8 FT)

Step 2.4.1
LOCATE THE BED SUPPORT BRACKETS IN TS-BK BOX, THESE ARE VEHICLE SPECIFIC.

MAKE SURE THE PARS YOU HAVE MATCH BOM FOR YOUR VEHICLE.

Step 2.4.2
FOR RAM VEHICLE, REMOVE TAIL LIGHT TO GAIN ACESS TO MOUNTING HOLES SHOWN

Step 2.4.3
IDENTIFY OEM HOLE AT REAR OF BED (CIRCLED ABOVE) DRILL OUT TO .565" DIA HOLE USING A STEP BIT ON BOTH SIDES OF BED

Step 2.4.4
INSTALL REAR BRACKETS. HAND TIGHTEN AND FULLY TIGHTEN AT END OF INSTALL PRIOR TO REINSTALLING TAIL LIGHT,

FULLY TIGHTEN AFTER STEP X.X
(2)FAS1025,
(2)FAS1026
(2)FAS0334

1/2 WRENCH
1/2 SOCKET

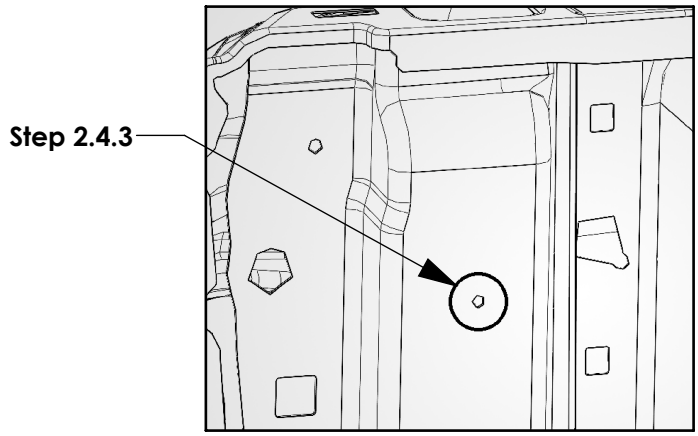

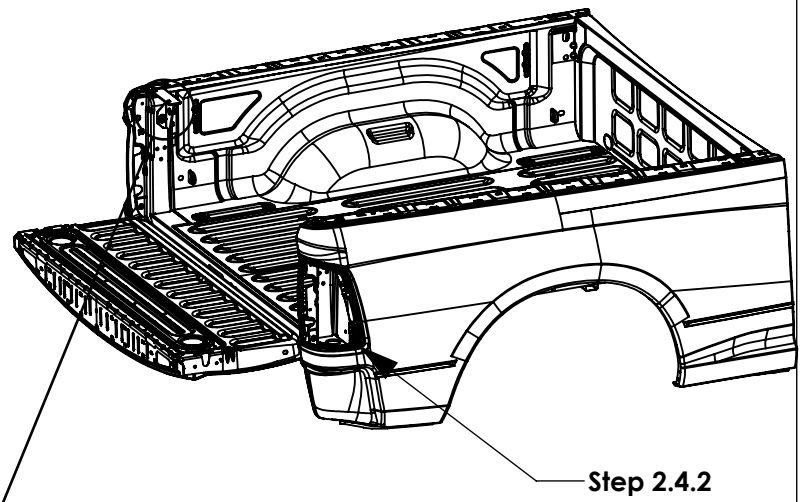

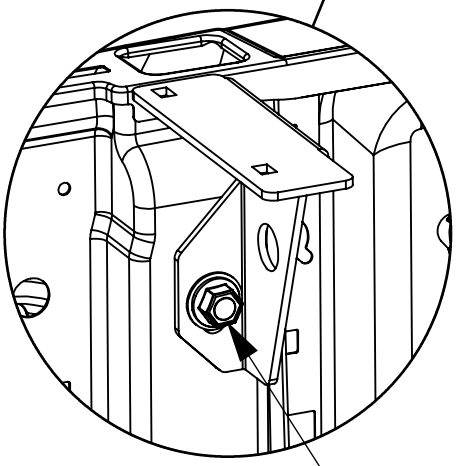

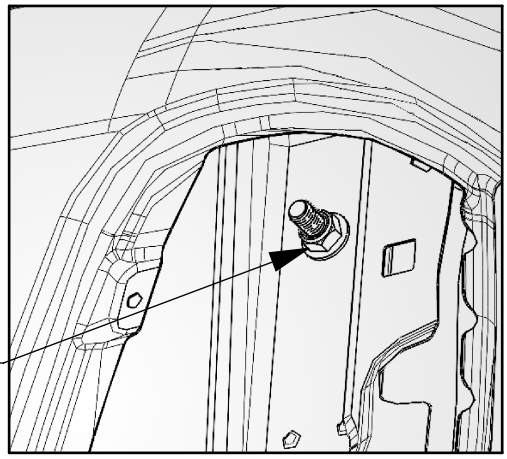

VIEW FROM INSIDE TAIL LIGHT

STEP 2.5 - PREP BED (GM 6FT)

Step 2.5.1
LOCATE THE BED SUPPORT BRACKETS IN TS-BK BOX, THESE ARE VEHICLE SPECIFIC.

MAKE SURE THE PARS YOU HAVE MATCH BOM FOR YOUR VEHICLE.

Step 2.5.2
FOR 1500, ALIGN LEFT HAND HOLE ON BED BRACKET TO HOLE IN GM1500 BED, MARK RIGHT HAND HOLE. DRILL OUT OEM HOLE TO 1/2". DRILL OUT 1/2" HOLE

FOR 2500, ALIGN LEFT HAND HOLE ON BED BRACKET TO HOLE IN GM1500 BED, MARK RIGHT HAND HOLE. DRILL OUT OEM HOLE TO 1/2". DRILL OUT 1/2" HOLE.

1/2" DRILL BIT
DRILL

Step 2.5.3
SET (4)FAS0091 INTO HOLES

PLUSNUT TOOL

Step 2.5.4
INSTALL REAR BRACKETS HAND TIGHTEN (4)FAS0092, (4)FAS0098, (4)FAS0086, & (4)FAS0086

1/2 WRENCH
1/2 SOCKET

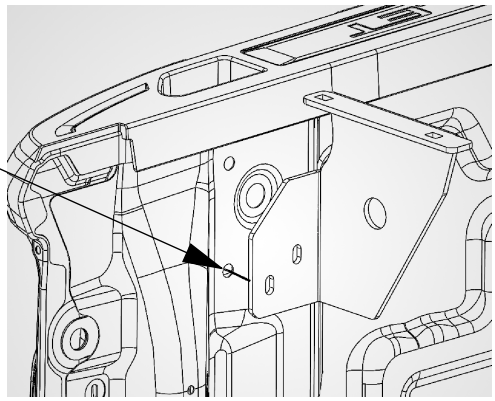

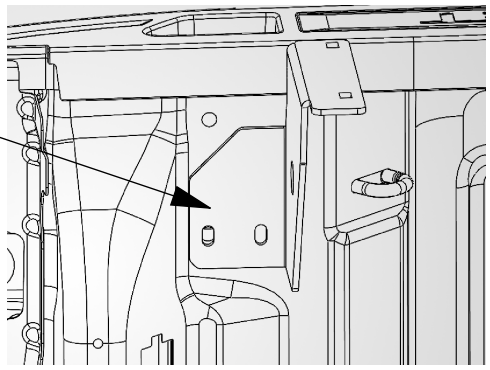

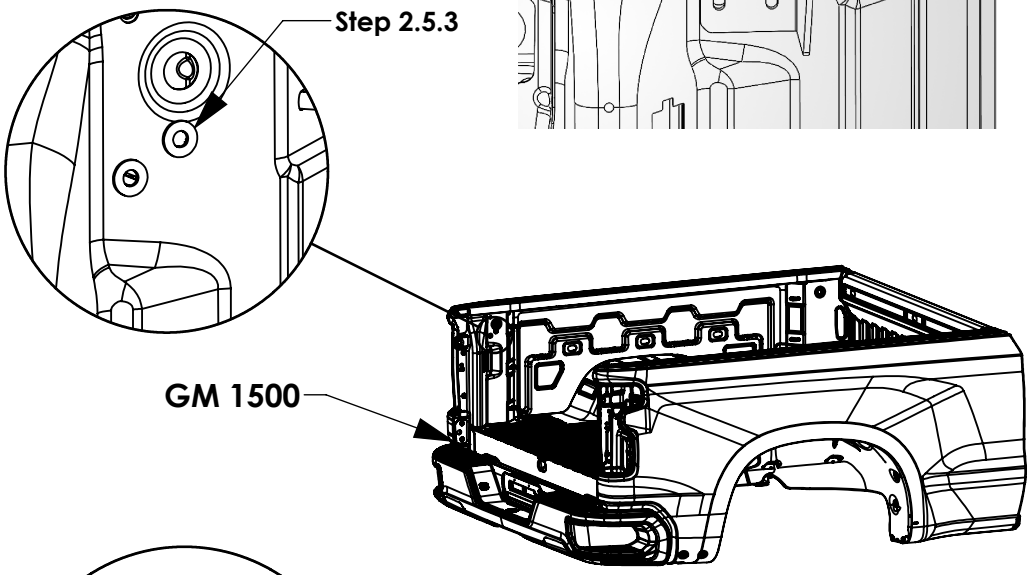

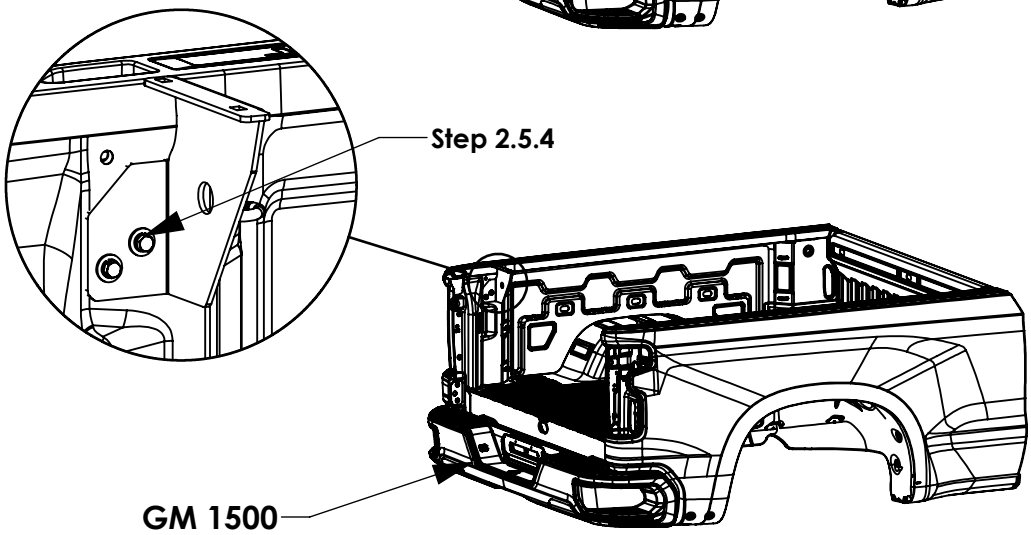

STEP 2.6 - PREP BED (GM 8FT)

Step 2.6.1
LOCATE THE BED SUPPORT BRACKETS IN TS-BK BOX, THESE ARE VEHICLE SPECIFIC.

MAKE SURE THE PARS YOU HAVE MATCH BOM FOR YOUR VEHICLE.

Step 2.6.2
FOR 1500, ALIGN TOP HOLE ON BED BRACKET WITH HOLE SHOWN ON REAR OF TRUCK BED, AND MARK CENTER OF LOWER SLOT.

DRILL OUT OEM HOLE TO 1/2". DRILL OUT 1/2" HOLE

FOR 2500, ALIGN BOTTOM HOLE ON BED BRACKET WITH BOTTOM HOLE SHOWN ON REAR OF TRUC BED. MARK CENTER OF TOP SLOT.

DRILL OUT OEM HOLE TO 1/2". DRILL OUT 1/2" HOLE.

1/2" DRILL BIT
DRILL

Step 2.6.3
SET (4)FAS0091 INTO HOLES

PLUSNUT TOOL

Step 2.6.4
INSTALL REAR BRACKETS HAND TIGHTEN (4)FAS0092, (4)FAS0098, & (4)FAS0086

1/2 WRENCH
1/2 SOCKET

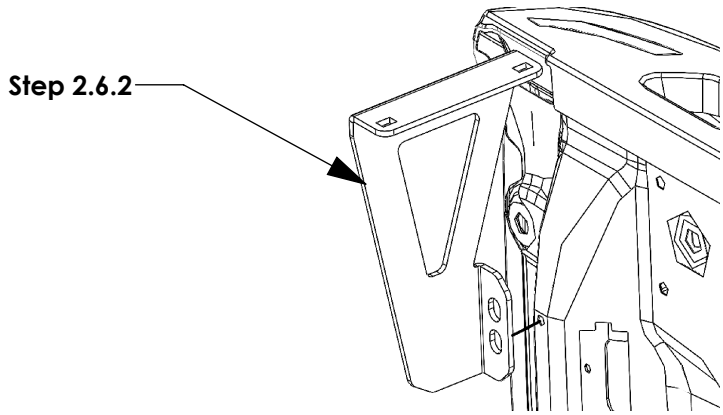

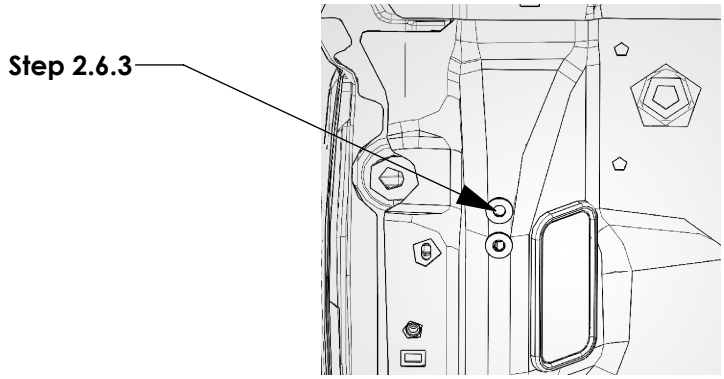

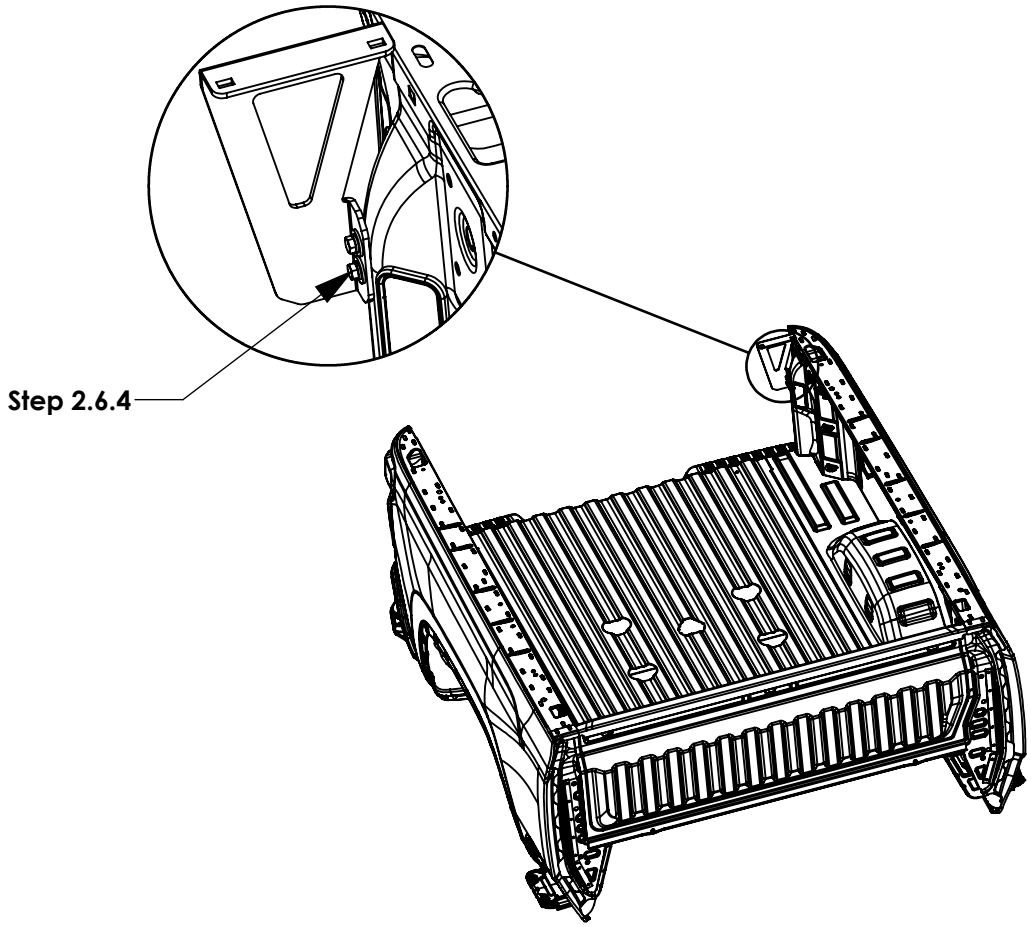

STEP 3 - PREP BED FOR FOAM STRIPS

Step 3.1
APPLY FOAM STRIPS 73632 ON BED RAIL (QTY 4 x FOR WHOLE BED-2 EACH SIDE) START FLUSH WITH THE END OF THE CAB SIDE OF THE BED RAIL.

DO NOT TRIL EXCESS UNTIL FULLY INSTALLED.

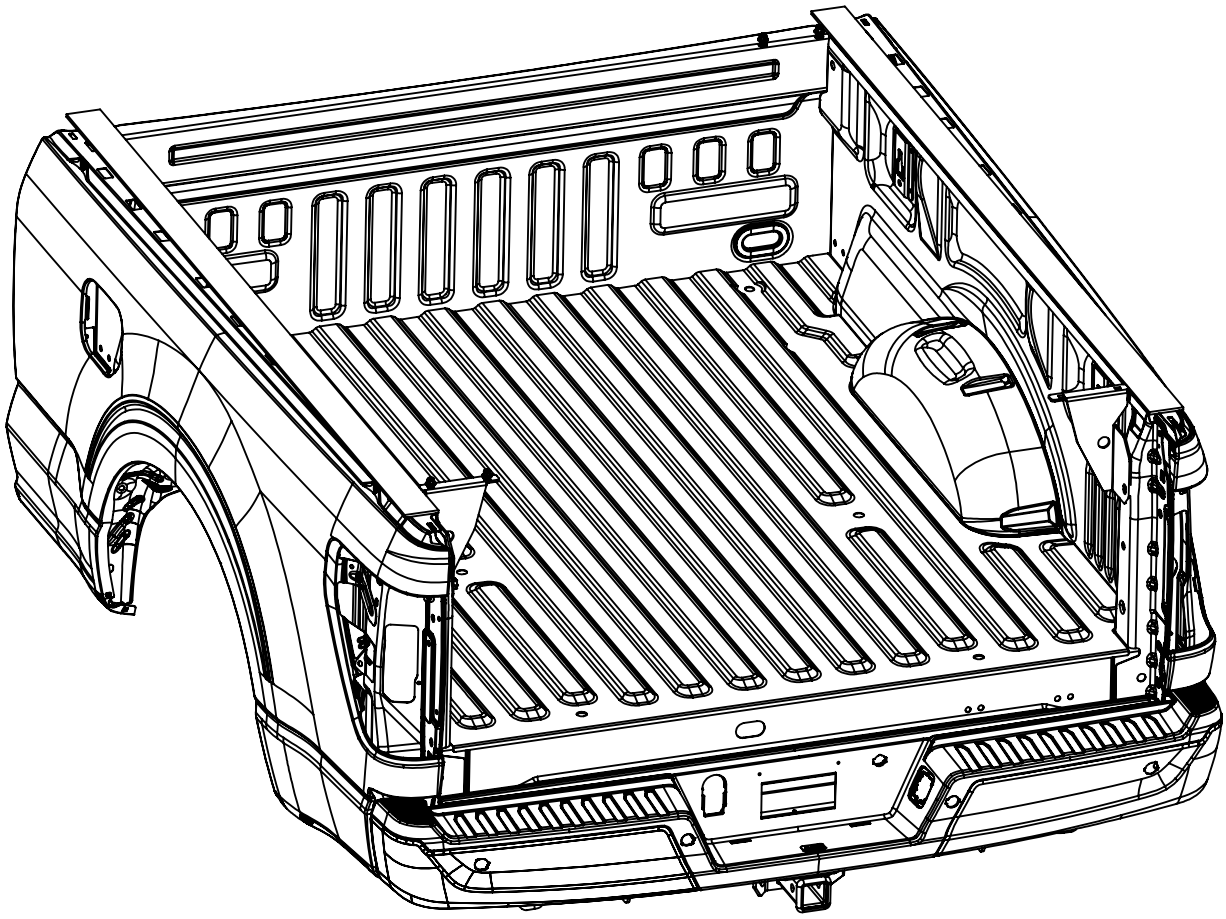

STEP 4 - PLACE BOXES ON BED SO IT OVERHANG THE TAILGATE BY 2-3 FEET - ATTACH BOXES WITH FRONT RAIL SUPPORT

Step 4.1
PLACE BOXES ON BED AS SHOWN, ALIGN 79950-B TO THE BOTTOM OF BOTH BOXES ON THE CAB SIDE OF THE VEHICLE

Step 4.2
LOOSELY ASSEMBLE UNTIL STEP 6, HAND TIGHTEN (4)FAS0398, (4)FAS0248, & (4)FAS0688

1/2 WRENCH
1/2 SOCKET

FULLY TIGHTEN AFTER Step 7.1

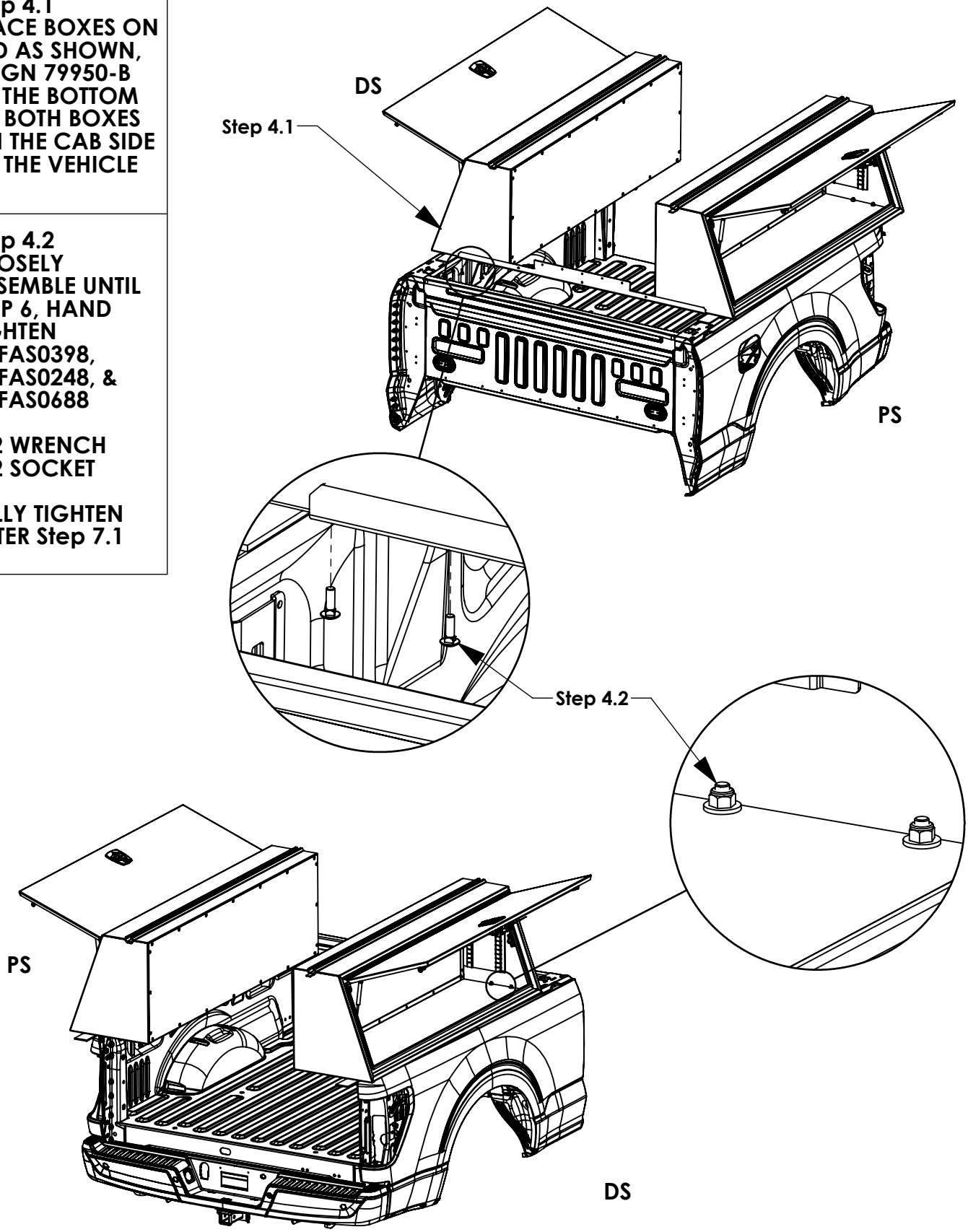

CHECK THAT THE BOXES ARE CENTERED ON VEHICLE

STEP 5 - MEASURE DISTANCE FROM BED RAIL AT CURB SIDE AND ENSURE BOTH SIDES ARE EQUAL

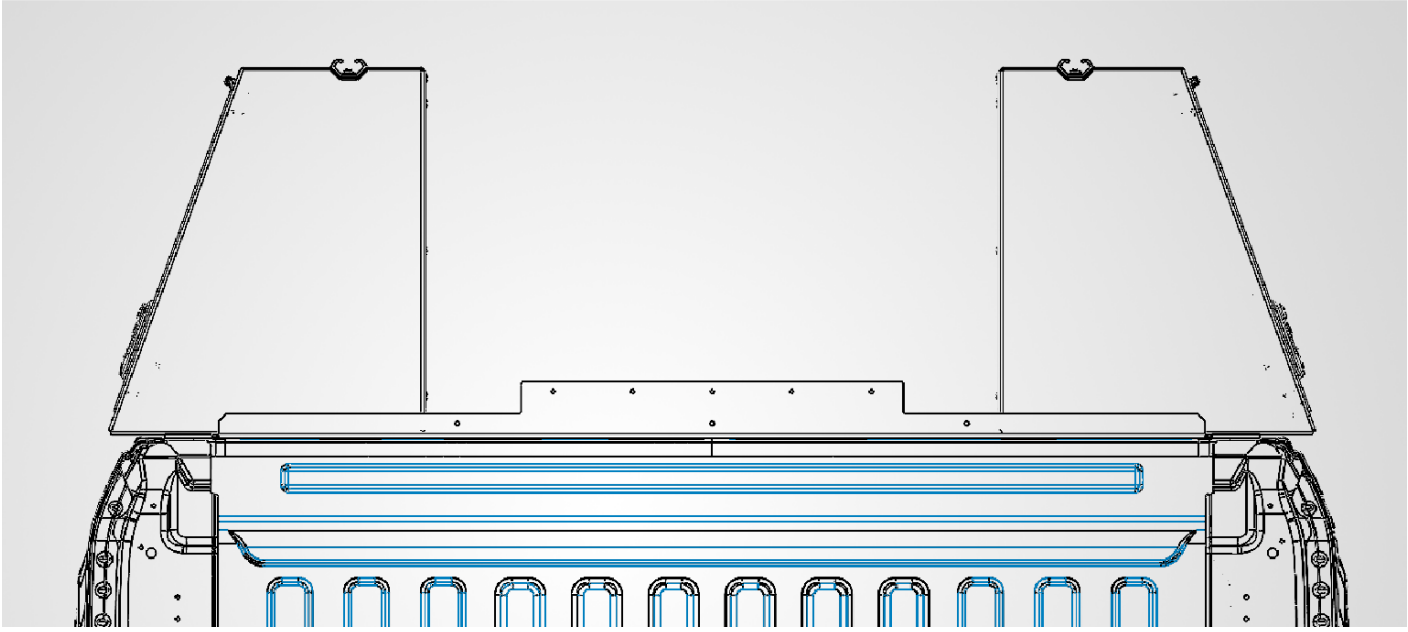

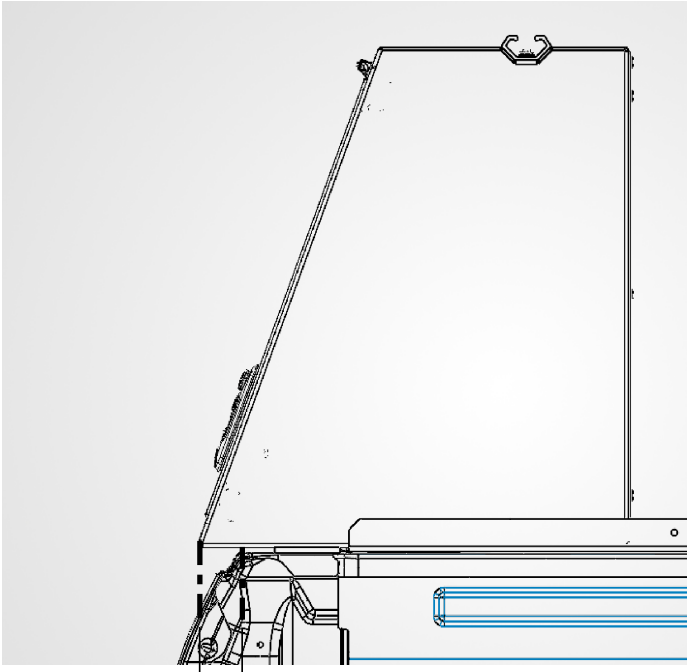

ENSURE THIS DISTANCE IS THE SAME ON BOTH SIDES OF VEHICLE

STEP 6 - INSTALL FASTENERS TO SECURE BOXES TO REAR GUSSET SUPPORTS

Step 6.1
BOLT BOXES TO REAR SUPPORTS FULLY TIGHTEN (4)FAS0248, (4)FAS0018, (4)FAS0688, & (4)FAS0398

9/16 WRENCH
9/16 SOCKET

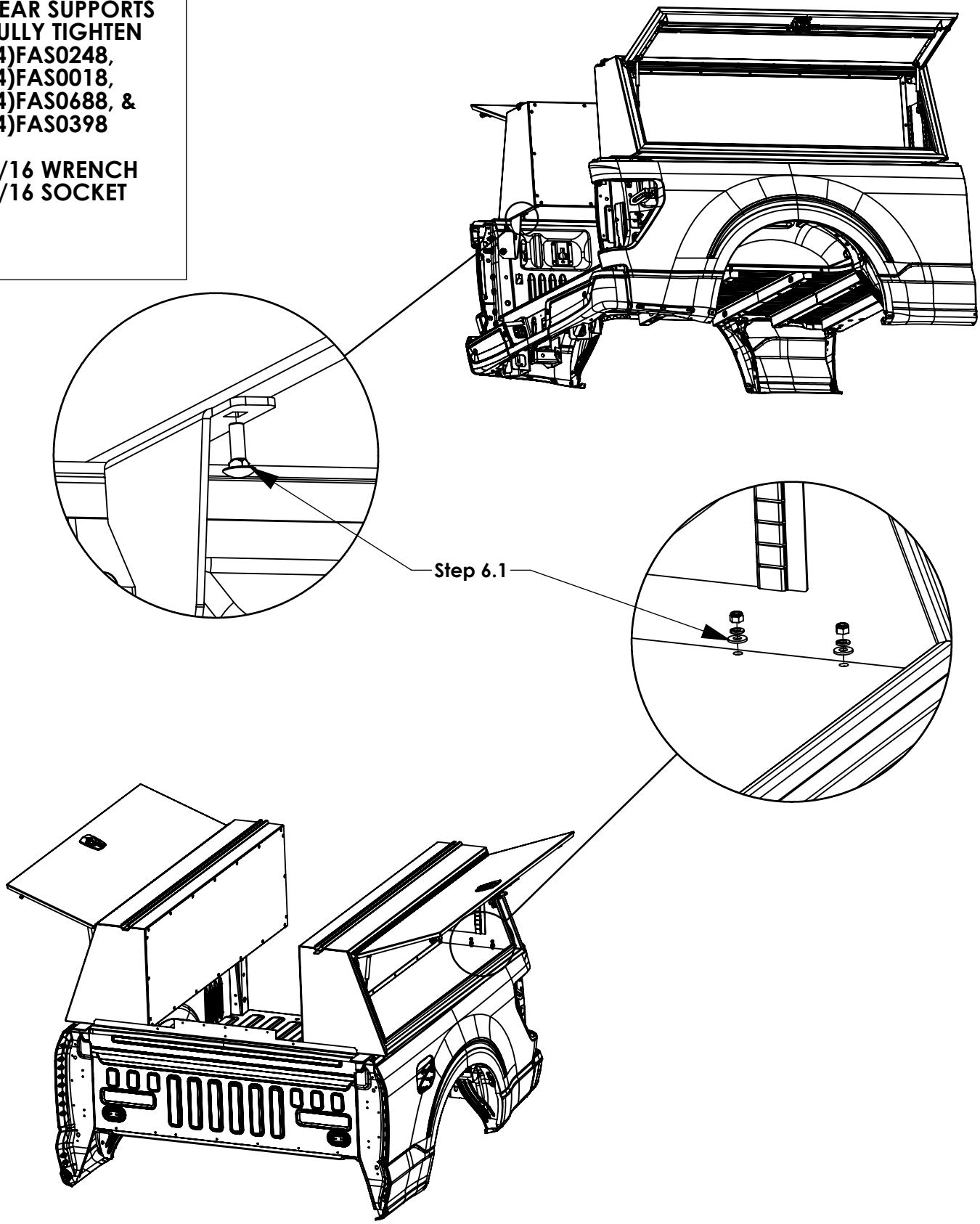

STEP 7 - INSTALL RIVETS AT FRONT AND REAR OF BOXES TO SEAL

Step 7.1
INSTALL RIVETS (12)FAS0584 RIVETS IN FRONT AND REAR OF EACH BOX

RIVET GUN

FULLY TIGHTEN ALL FASTENERS & REINSTALL TAIL LIGHTS AT THIS POINT

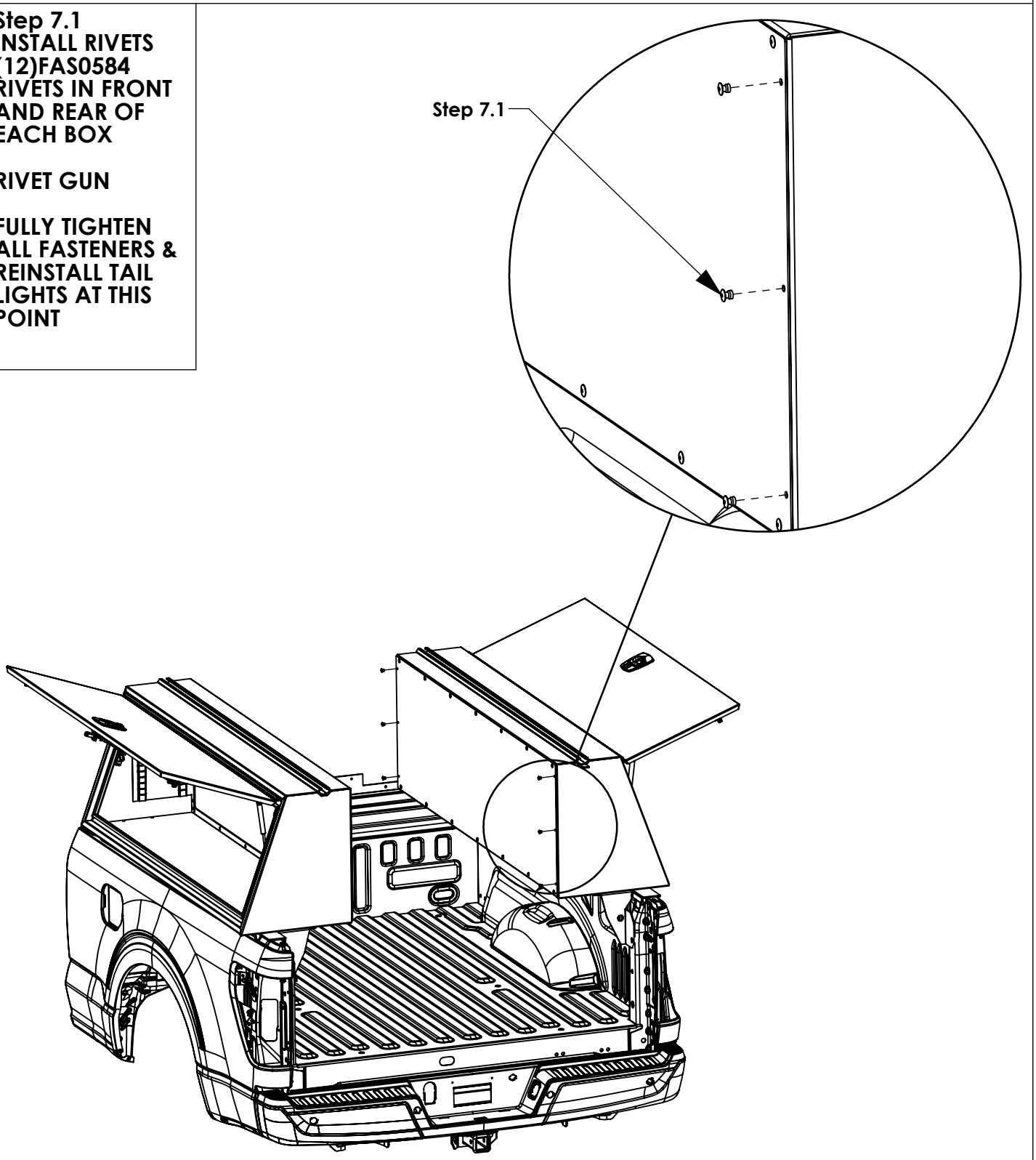

STEP 8 - DRILL BED RAIL MOUNTING HOLES

Step 8.1
IDENTIFY THE CORRECT DRILL JIG FOR THE VEHICLE YOUR REINSTALLING ON

RAM 1/2/3500 - 8'

F-150 - 8'

F-250/350 - 8'

GM 1/2/3500 - 8'

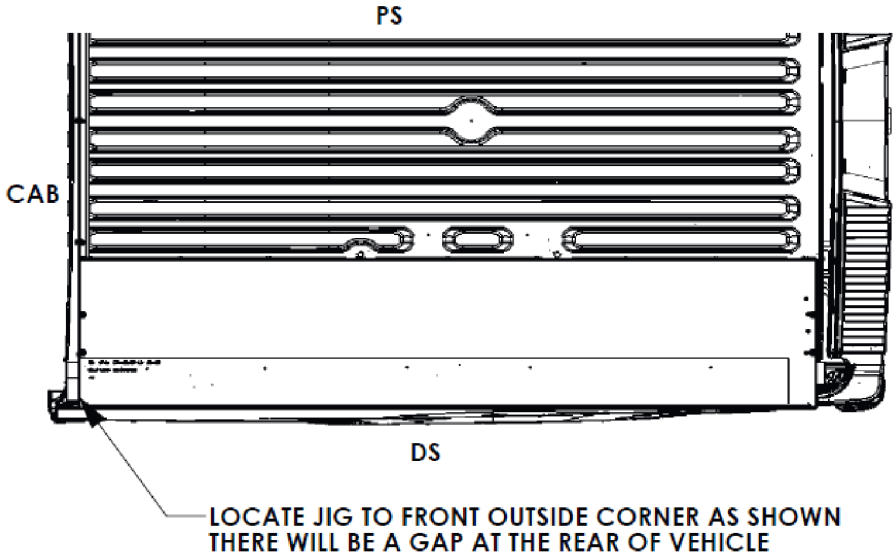

Step 8.2
PLACE JIG IN VEHICLE AS SHOWN. START ON DS

FILP JIG TO MIRROR ON PS

MARK ALL HOLES WITH PAINT PEN

NOTE:
FOR 6' BEDS IGNORE Step 8.1 & 8.2,
USE PAINT PEN TO MARK 4 HOLES EVENLY SPACED IN TOOL BOX AND TRUCK BED RAIL TO DRILL. CONTINUE TO Step 8.3

Step 8.3
USING A STEP BIT OR 3/8 DRILL BIT, DRILL OUT ALL MARKED HOLES ON DS AND PS BED RAIL

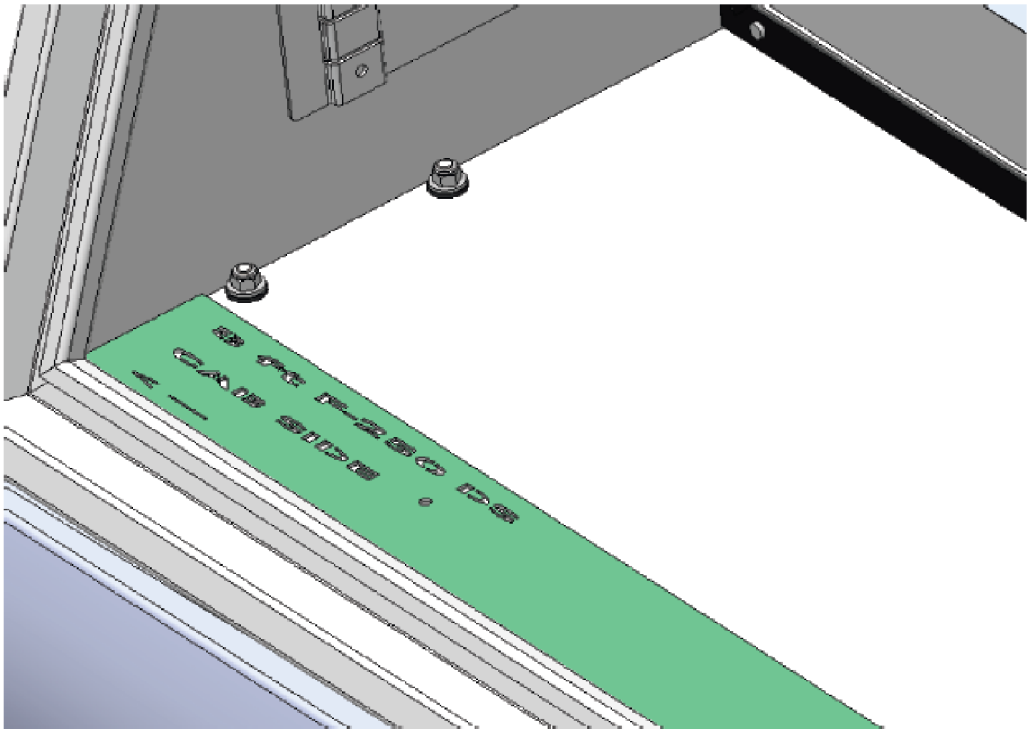

STEP 9 - INSTALL BED RAIL FASTENERS

Step 9.1
REMOVE ANY JIGS, FULLY TIGHTEN FAS0242, FAS0245, FAS0164, & FAS0248 TO SECURE BOXES TO BED RAIL

10 PLACES FOR 8FT BED

8 PLACES FOR 6FT BED

1/2 WRENCH
1/2 SOCKET

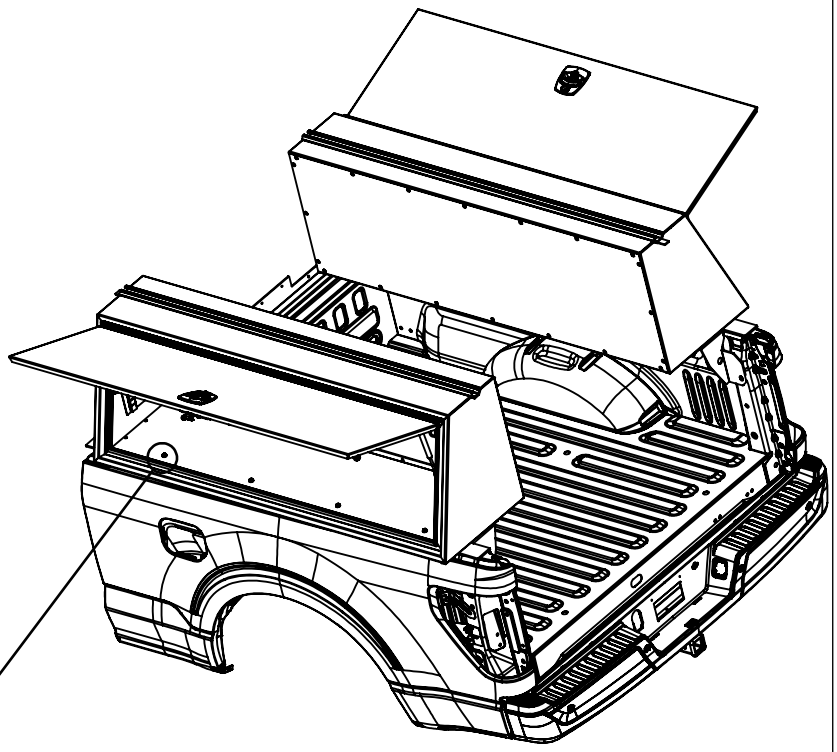

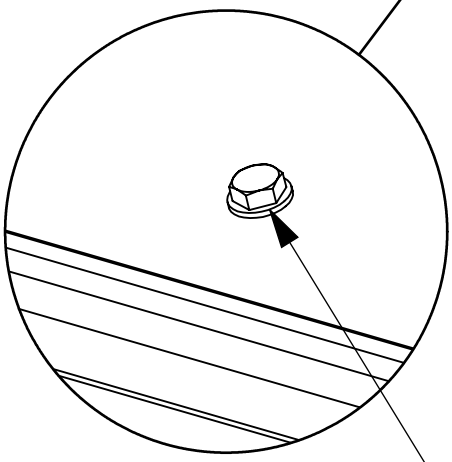

Step 9.1

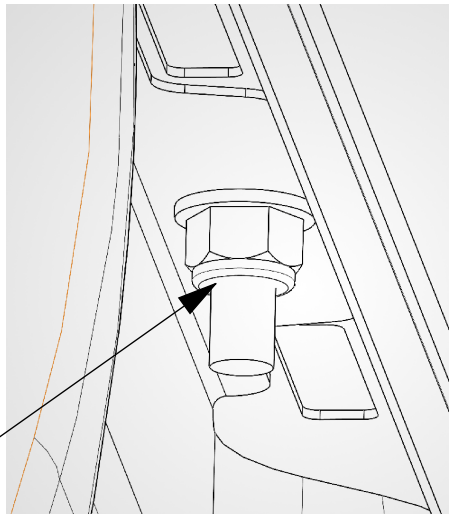

VIEW FROM UNDER RAIL