ADRIAN STEEL
Cargo Management Solutions for Commercial Vehicles

ALUM. TOPPER, W/ SIDE DOORS AND HINGED REAR DOOR

PRODUCT WEIGHT

283 LBS

WIDTH X DEPTH X HEIGHT

70" X 98.9" X 26.9"

CAPACITY

400# ROOF CAPACITY

COLOR

WHITE PANELS
BLACK TRIM

CATALOG NUMBER

TFKGMT296HM26W

PRODUCT FEATURES

THIS IS ADRIAN STEEL'S STANDARD ALUMINUM TOPPER FOR 8' BED SILVERADO HD PICKUPS. PLEASE NOTE THAT THIS IS DESIGNED TO FIT THE 2023 M.Y. PICKUP BED.

TOPPER ROOF RAIL IS STANDARD, ALLOWING FOR HD-UTILITY, GRIP LOCK AND PROLIFT LADDER RACKS TO BE MOUNTED TO THE ROOF. MORE OPTIONS TO COME.

SIDE DOOR TOOLBOX MOUNTING IS AN OPTIONAL ACCESSORY FOR THIS KIT.

KIT INCLUDES MOUNTING HARDWARE, VEHICLE SPECIFIC TAILGATE COVER AND OEM SPECIFIC 3rd BRAKE LIGHT HARNESS. ALL 3 HANDLES WILL BE KEYED ALIKE.

TOPPER PANELS ARE 0.080 SHEET ALUMINUM, WITH MOST STRUCTURAL COMPONENTS CONSISITING OF 0.125 SHEET & EXTRUDED ALUMINUM.

SEE PAGES 2-4 FOR OTHER PRODUCTS THAT WORK WITH THIS UNIT.

ADRIAN STEEL
Cargo Management Solutions for Commercial Vehicles

ALUM. TOPPER, W/ SIDE DOORS AND HINGED REAR DOOR

CATALOG NUMBER **TFKGMT296HM26W**

TOOLBOX ACCESSORIES THAT WILL WORK WITH THIS PRODUCT.

THE FIRST SET OF PARTS IS INDIVIDUALLY BOXED COMPONENTS.
THE SECOND SET CONTAINS COMPLETE SOLUTIONS KITS (i.e. LEVEL 8'S).

CATALOG NUMBER	DESCRIPTION (smart)
INTERIOR TOOLBOX COMPONENTS	
TTBBK179323	TBOX, BODY KIT, 179323
TTBSDK1723	TBOX, SPL DIV KIT, 1723
TTBSK1746	TBOX, SHELF KIT, 1746
TTBSK1793	TBOX, SHELF KIT, 1793
TTBTDK1723	TBOX, TALL DIV KIT, 1723
INTERIOR TOOLBOX CONFIGURATIONS (REFER TO WEBSITE)	
TTB179323C01	TBOX CONFIG, 01
TTB179323C02	TBOX CONFIG, 02
TTB179323C03	TBOX CONFIG, 03
TTB179323C04	TBOX CONFIG, 04
TTB179323C05	TBOX CONFIG, 05
TTB179323C06	TBOX CONFIG, 06
TTB179323C07	TBOX CONFIG, 07
TTB179323C08	TBOX CONFIG, 08
TTB179323C09	TBOX CONFIG, 09
TTB179323C10	TBOX CONFIG, 10
TTB179323C11	TBOX CONFIG, 11

The information contained in this document is the sole property of ADRIAN STEEL COMPANY. ADRIAN STEEL COMPANY retains the right to modify and/or change the product of its design at any time with prior notification.

ADRIAN STEEL
Cargo Management Solutions for Commercial Vehicles

ALUM. TOPPER, W/ SIDE DOORS AND HINGED REAR DOOR

CATALOG NUMBER **TFKGMT296HM26W**

TOOLBOX ACCESSORIES THAT WILL WORK WITH THIS PRODUCT.

THE FIRST SET OF PARTS IS INDIVIDUALLY BOXED COMPONENTS.
THE SECOND SET CONTAINS COMPLETE SOLUTIONS KITS (i.e. LEVEL 8'S).

CATALOG NUMBER	DESCRIPTION (smart)
LADDER RACK COMPONENTS	
URMBK4W	UTILTY,MNT BKT KT,RAIL,4W
2BARTOPW	2BAR UTILITY RACK, TOP, W
PLSDPSLT6W	PROLIFT,STD,PS,LOW T,6,W
PLSDDSLT6W	PROLIFT,STD,DS,LOW T,6,W
PLMDPSLT6W	PROLIFT,MAX,PS,LOW T,6,W
PLMDDSLT6W	PROLIFT,MAX,DS,LOW T,6,W
PLMDPSMT6W	PROLIFT,MAX,PS,MID T,6,W
PLMDDSMT6W	PROLIFT,MAX,DS,MID T,6,W
GL-FSVPS	GL FULL SIZE VEHICLE PS
GL-FSVDS	GL FULL SIZE VEHICLE DS
LADDER RACK KITS	
PLS61LT6	PROLIFT SGL STD DR 6' TOP
PLS63LT6	PROLIFT DBL STD DR 6' TOP
PLS64LT6	PROLIFT CMB STD DR 6' TOP
PLS65LT6	PROLIFT-UT CMB SDR 6' TOP
GL61LT6	SGL GL, 8'+ TOPPER
GL63LT6	DUAL GL,8'+ TOPPER
2B6TOPW	2-BAR UTY RK TOP 6" UPRT
PLM61LT6	PROLFT SGL SIDE MAX 6'
PLM63LT6	PROLFT DUAL SIDE MAX 6'

The information contained in this document is the sole property of ADRIAN STEEL COMPANY. ADRIAN STEEL COMPANY retains the right to modify and/or change the product of its design at any time with prior notification.

ADRIAN STEEL
Cargo Management Solutions for Commercial Vehicles

ALUM. TOPPER, W/ SIDE DOORS AND HINGED REAR DOOR

CATALOG NUMBER **TFKGMT296HM26W**

LIGHTING ACCESSORIES THAT WILL WORK WITH THIS PRODUCT

CATALOG NUMBER	DESCRIPTION (smart)
LIGHTING KITS	
72549	COMPLETE PLUG & PLAY LIGHTING KIT: 2 DOME, 3 STRIP
74494	COMPLETE PLUG & PLAY KIT: 3 STRIP LIGHTS
72608	PLUG & PLAY STRIP LIGHT KIT: 1 REAR DOOR
74493	PLUG & PLAY STRIP LIGHT KIT: 1 DRIVER DOOR
74492	PLUG & PLAY STRIP LIGHT KIT: 1 PASSENGER DOOR

The information contained in this document is the sole property of ADRIAN STEEL COMPANY. ADRIAN STEEL COMPANY retains the right to modify and/or change the product of its design at any time with prior notification.

INSTR. NUMBER : 71622	PG: 1	REV: W
PART NUMBER : TFK__T178HM23W		
PART DESC. : ASM INS, TFK__T178HM23W		

NOTE: THESE INSTRUCTIONS ARE VALID FOR ALL TFK FULL TOPPER KITS. A FEW BOM KITS ARE SHOWN FOR REFERENCE ONLY.

INSTRUCTIONS SHOWS F-150 BODY DURING INSTALLATION

FASTENER AND HOLE COUNTS MAY BE DIFFERENT BETWEEN TOPPER KITS.

E-LOCK VERSIONS:
SWAP M WITH E IN PART NUMBER
EXAMPLE: TFKFDT178HM23W BECOMES TFKFDT178HE23W

BOM FOR 6.5' F-150

ITEM NO.	PART NUMBER	DESCRIPTION	QTY.
1	TSK78M23W	TOP, SIDE KIT,78",M,23,W	2
2	TCK78HM23W	TOP,CLOSE KIT,78",HM23,W	1
3	TRK7823W	TOP, ROOF KIT,78",23,W	1
4	THKFDT178M23	HDW KIT, TFKFDT178HM23W	1
5	TMLHK	Topper Mechanical Lock Hatch Kit	1

*** E-LOCK VERSION SWAP TMLHK WITH TELH05**

BOM FOR 6.5' SILVERADO 1500

ITEM NO.	PART NUMBER	DESCRIPTION	QTY.
1	TSK78M23W	TOP, SIDE KIT,78",M,23,W	2
2	TCK78HM23W	TOP,CLOSE KIT,78",HM23,W	1
3	TRK7823W	TOP, ROOF KIT,78",23,W	1
4	THKGMT178M23	HDW KIT, TFKGMT178HM23W	1
5	TMLHK	Topper Mechanical Lock Hatch Kit	1
19	81552-W	INTERIOR, LGT MAG BRKT, WHITE	1

*** E-LOCK VERSION SWAP TMLHK WITH TELH02**

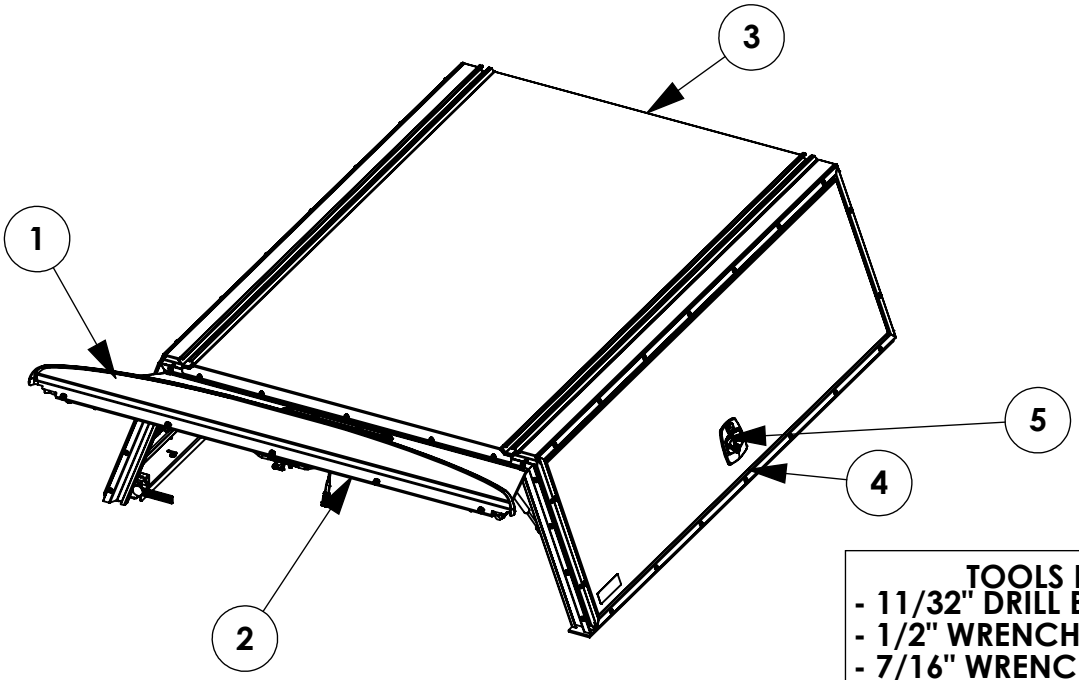

TOOLS NEEDED:
- **11/32" DRILL BIT**
- **1/2" WRENCH & SOCKET**
- **7/16" WRENCH**
- **M10 SOCKET**
- **M8 SOCKET**
- **M4 ALLEN**
- **3/16" ALLEN**
- **5/32" ALLEN**
- **DRIVE RATCHET / IMPACT**
- **SCISSORS**
- **TAPE MEASURE**
- **ALIGNMENT PUNCH**
- **1/4" RIVET TIP**

INSTR. NUMBER : 71622	PG: 2	REV: W
PART NUMBER : TFK__T178HM23W		
PART DESC. : ASM INS, TFK__T178HM23W		

E-LOCK VERSIONS:
SWAP M WITH E IN PART NUMBER
EXAMPLE: TFKFDT178HM23W
BECOMES TFKFDT178HE23W

BOM FOR 6.3' RAM

ITEM NO.	PART NUMBER	DESCRIPTION	QTY.
1	TCK78HM23W	TOP,CLOSE KIT,78",HM23,W	1
2	THKRAM175M23	HDW KIT, TCKRAMT175HM23W	1
3	TRK7523W	TOP, ROOF PANEL KIT, RAM	1
4	TSK75M23W	TOP, SIDE KIT, 78" RAM	2
5	TMLHK	Topper Mechanical Lock Hatch Kit	1

*** E-LOCK VERSION SWAP TMLHK WITH TELH02**

BOM FOR 5.7' RAM

ITEM NO.	PART NUMBER	DESCRIPTION	QTY.
1	TSK66M23W	TOP, SIDE KIT,66",M,23,W	2
2	TCK78HM23W	TOP,CLOSE KIT,78",HM23,W	1
3	TRK6623W	TOP, ROOF KIT,66",23,W	1
4	THKRAM167M23	HDW KIT, TFKRAM167HM23W	1
5	TMLHK	Topper Mechanical Lock Hatch Kit	1

*** E-LOCK VERSION SWAP TMLHK WITH TELH01**

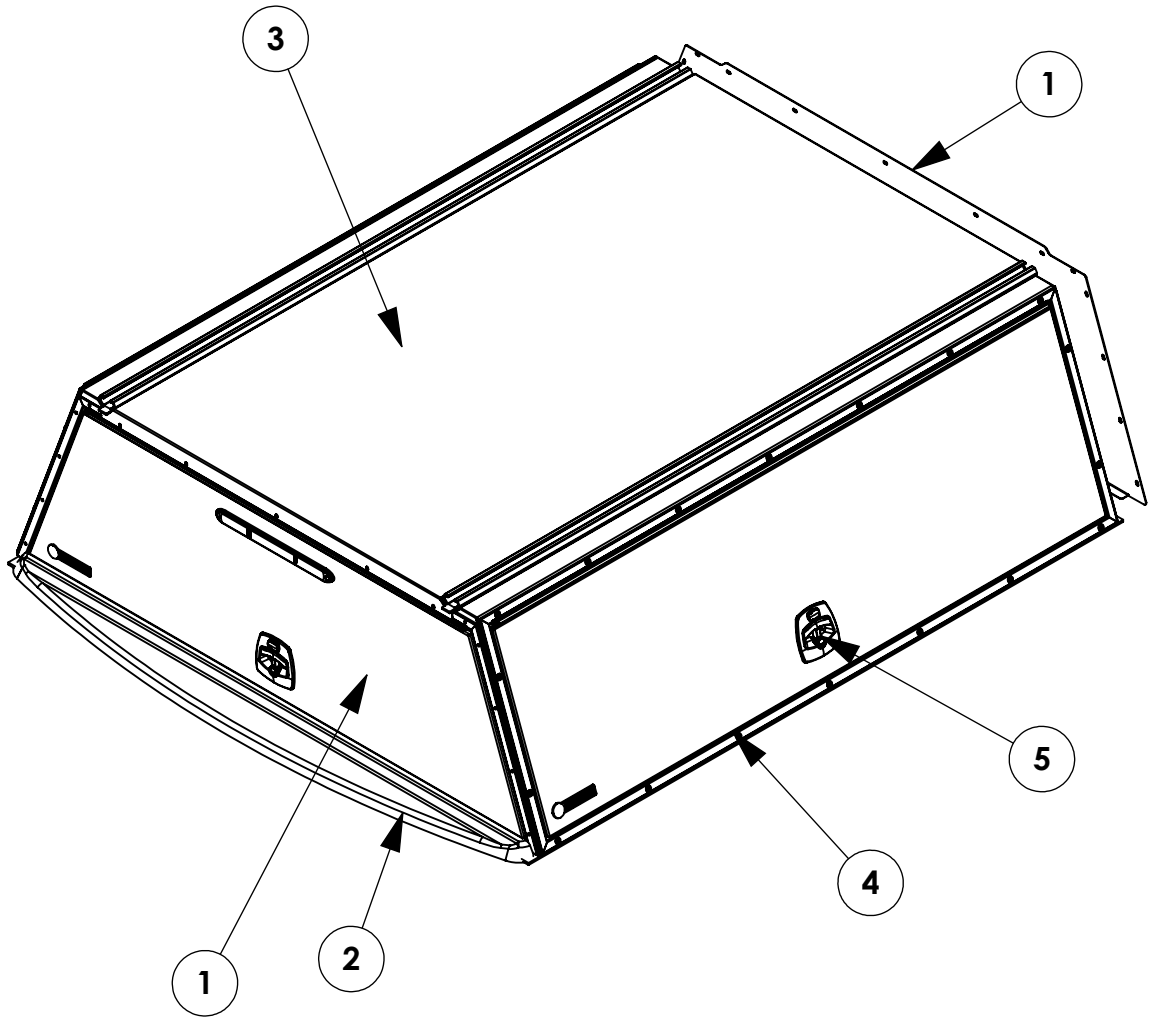

INSTR. NUMBER : 71622	PG: 3	REV: W
PART NUMBER : TFK__T196HM23W		
PART DESC. : ASM INS, TFK__T178HM23W		

E-LOCK VERSIONS:
SWAP M WITH E IN PART NUMBER
EXAMPLE: TFKFDT178HM23W
BECOMES TFKFDT178HE23W

BOM FOR 8.0' 23" TALL FORD F-150, F-250, F-350

ITEM NO.	PART NUMBER	DESCRIPTION	QTY.
1	TSK96M23W	TOP, SIDE KIT,96",M,23,W	2
2	TCK78HM23W	TOP,CLOSE KIT,78",HM23,W	1
3	TRK9623W	TOP, ROOF KIT,96",23,W	1
4	THKFDT196M23	HDW KIT, TFKFDT196HM23W	1
5	TMLHK	Topper Mechanical Lock Hatch Kit	1

*** E-LOCK VERSION SWAP TMLHK WITH TELH06**

BOM FOR 8.0' 23" TALL SILVERADO 1500, 2500, 3500

ITEM NO.	PART NUMBER	DESCRIPTION	QTY.
1	TSK96M23W	TOP, SIDE KIT,96",M,23,W	2
2	TCK78HM23W	TOP,CLOSE KIT,78",HM23,W	1
3	TRK9623W	TOP, ROOF KIT,96",23,W	1
4	THKGMT196M23	HDW KIT, TFKGMT196HM23W	1
5	TMLHK	Topper Mechanical Lock Hatch Kit	1

*** E-LOCK VERSION SWAP TMLHK WITH TELH03**

BOM FOR 8.0' 23" TALL RAM 1500, 2500, 3500

ITEM NO.	PART NUMBER	DESCRIPTION	QTY.
1	TSK96M23W	TOP, SIDE KIT,96",M,23,W	2
2	TCK78HM23W	TOP,CLOSE KIT,78",HM23,W	1
3	TRK9623W	TOP, ROOF KIT,96",23,W	1
4	THKRAM196M23	HDW KIT, TFKRAM196HM23W	1
5	TMLHK	Topper Mechanical Lock Hatch Kit	1

*** E-LOCK VERSION SWAP TMLHK WITH TELH03**

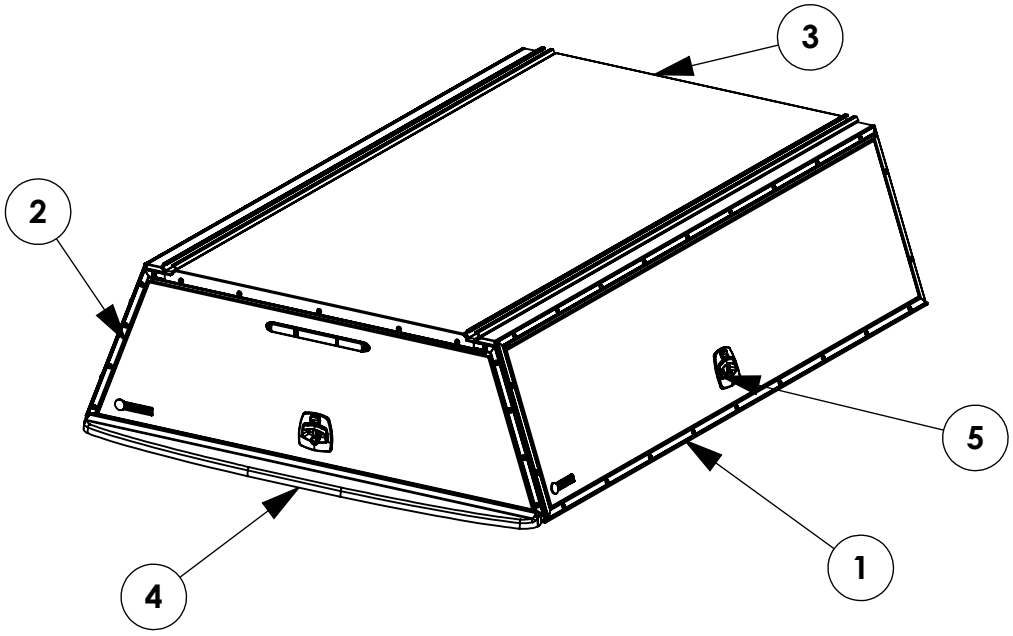

INSTR. NUMBER : 71622	PG: 4	REV: W
PART NUMBER : TFK__T296HM26W		
PART DESC. : ASM INS, TFK__T178HM23W		

E-LOCK VERSIONS:
SWAP M WITH E IN PART NUMBER
EXAMPLE: TFKFDT178HM23W
BECOMES TFKFDT178HE23W

BOM FOR 8.0' 26" TALL FORD F-150, F-250, F-350

ITEM NO.	PART NUMBER	DESCRIPTION	QTY.
1	TSK96M26W	TOP, SIDE KIT,96",M,26,W	2
2	TCK80HM26W	TOP,CLOSE KIT,80",HM263,W	1
3	TRK9623W	TOP, ROOF KIT,96",23,W	1
4	THKFDT296M26	HDW KIT, TFKFDT296HM26W	1
5	TMLHK	Topper Mechanical Lock Hatch Kit	1

*** E-LOCK VERSION SWAP TMLHK WITH TELH06**

BOM FOR 8.0' 26" TALL SILVERADO 1500, 2500, 3500

ITEM NO.	PART NUMBER	DESCRIPTION	QTY.
1	TSK96M26W	TOP, SIDE KIT,96",M,26,W	2
2	TCK80HM26W	TOP,CLOSE KIT,80",HM263,W	1
3	TRK9623W	TOP, ROOF KIT,96",23,W	1
4	THKGMT296M26	HDW KIT, TFKGMT296HM26W	1
5	TMLHK	Topper Mechanical Lock Hatch Kit	1

*** E-LOCK VERSION SWAP TMLHK WITH TELH03**

BOM FOR 8.0' 26" TALL RAM 1500, 2500, 3500
NOTE: SPECIAL ASSEMBLY INSTRUCTION SHOWN ON SHEET 20

ITEM NO.	PART NUMBER	DESCRIPTION	QTY.
1	TSK96M26W	TOP, SIDE KIT,96",M,26,W	2
2	TCK80HM26W	TOP,CLOSE KIT,80",HM263,W	1
3	TRK9623W	TOP, ROOF KIT,96",23,W	1
4	THKRAM296M26	HDW KIT, TFKRAM296HM26W	1
5	TMLHK	Topper Mechanical Lock Hatch Kit	1

*** E-LOCK VERSION SWAP TMLHK WITH TELH03**

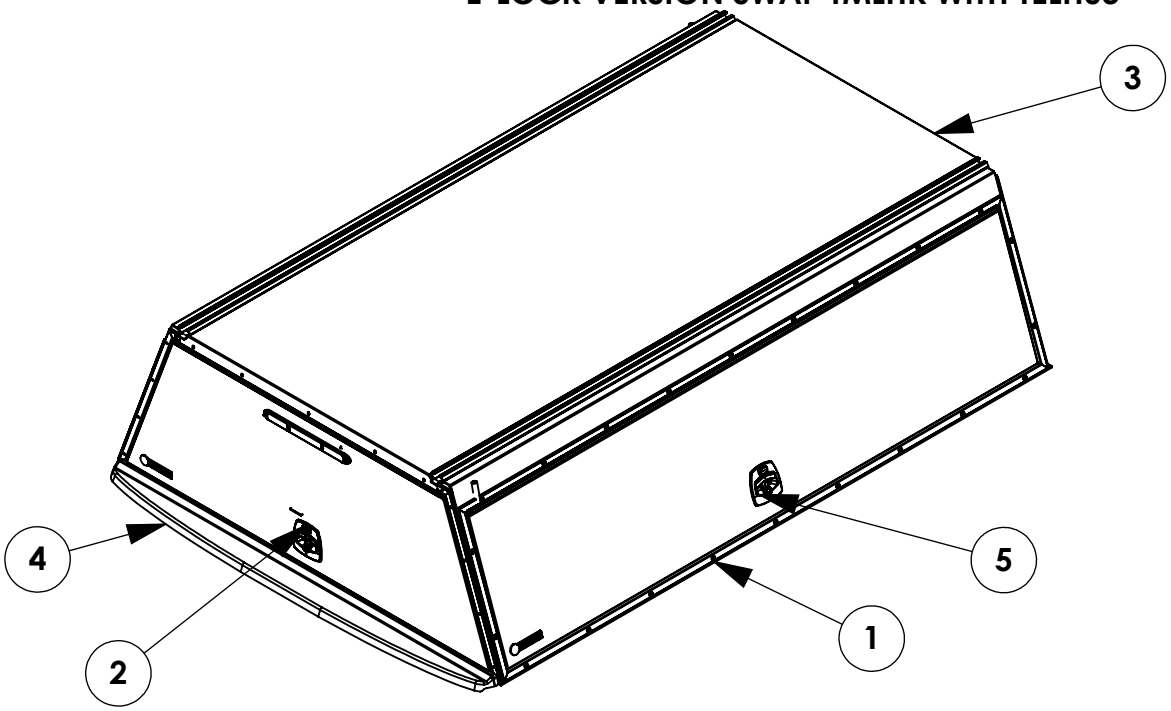

INSTR. NUMBER : 71622	PG: 5	REV: W
PART NUMBER : TFKFDT166HM23W		
PART DESC. : ASM INS, TFK__T178HM23W		

E-LOCK VERSION: TFKFDT166HE23W

BOM FOR 5.5' 23" TALL FORD F-150 LIGHTNING/ICE

ITEM NO.	PART NUMBER	DESCRIPTION	QTY.
1	TSK66M23W	TOP, SIDE KIT,66",M,23,W	2
2	TCK78HM23W	TOP,CLOSE KIT,78",HM23,W	1
3	TRK6623W	TOP, ROOF KIT,66",23,W	1
4	THKFDT166M23	HDW KIT, TFKFDT166HM23W	1
5	TMLHK	Topper Mechanical Lock Hatch Kit	1

*** E-LOCK VERSION SWAP TMLHK WITH TELH04**

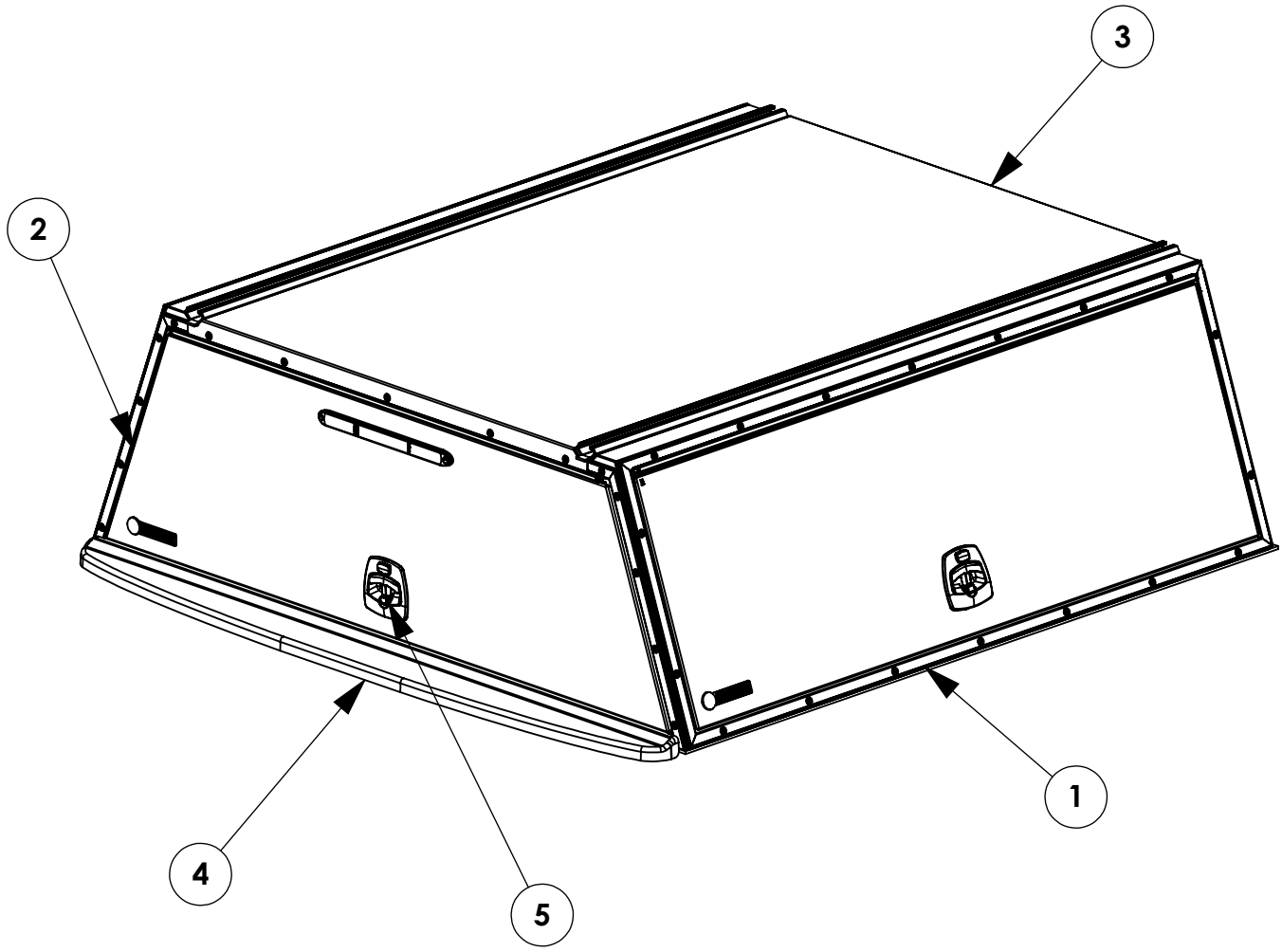

INSTR. NUMBER : 71622	PG: 6	REV: W
PART NUMBER : TFKRNG160HM23W		
PART DESC. : ASM INS, TFK__T178HE23W		

BOM FOR 5' FORD RANGER

ITEM NO.	PART NUMBER	DESCRIPTION	QTY.
1	TSKRNG60M23W	TOP, SIDE KIT,60", RANGER,M,23,W	2
2	TCK72HM23W	TOP,CLOSE KIT,72",HM23,W	1
3	TRK6023W	TOP, ROOF KIT,60",23,W	1
4	THKRNG160M23	HDW KIT, TFKNFT172HM23W	1
5	TMLHK	TOPPER MECHANICAL LOCK HATCH KIT	1

E-LOCK VERSION: TFKRNG160HE23W

*** E-LOCK VERSION SWAP TMLHK WITH TELH04**

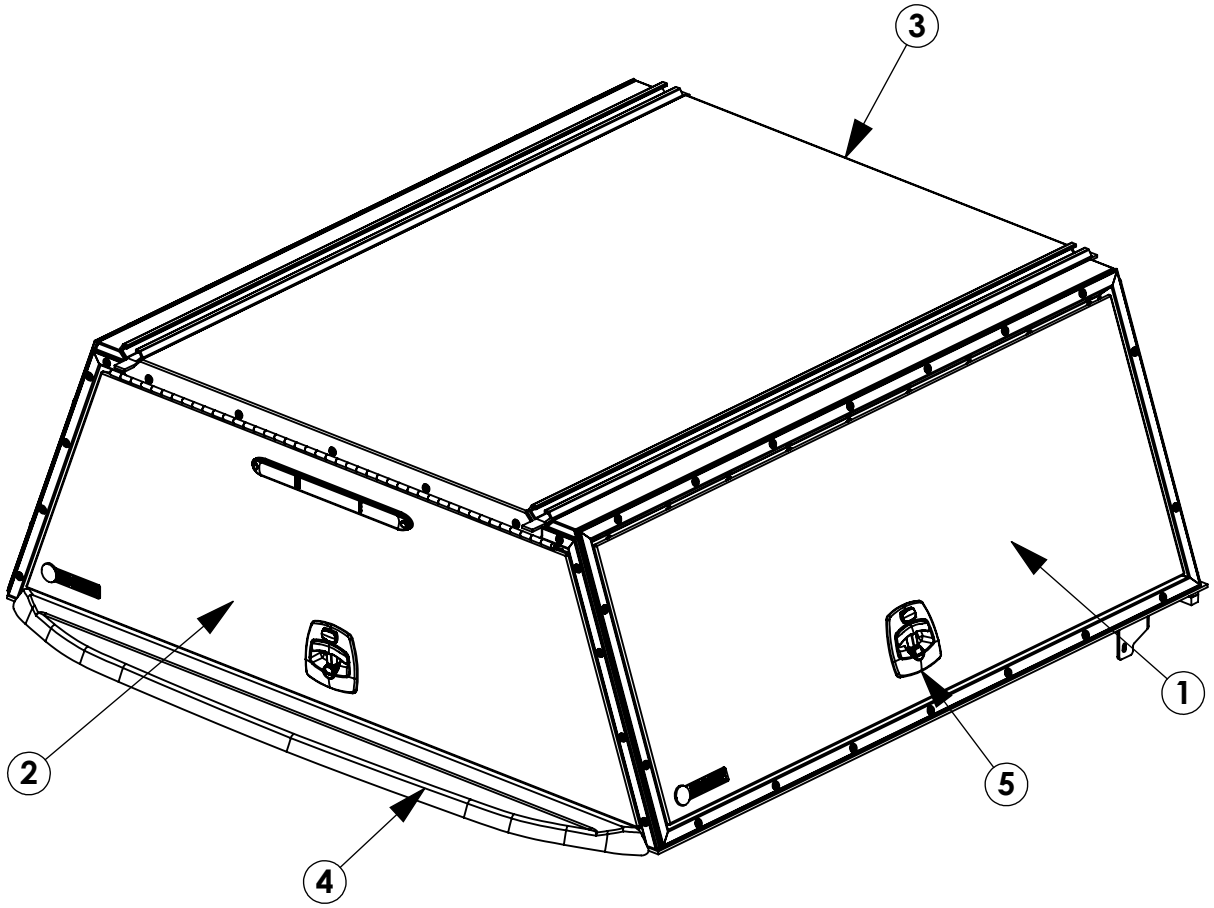

INSTR. NUMBER : 71622	PG: 7	REV: W
PART NUMBER : TFKNFT172HM23W		
PART DESC. : ASM INS, TFK__T178HM23W		

E-LOCK VERSION: TFKNFT172HE23W

BOM FOR 6.0' 23" TALL NISSAN FRONTIER

ITEM NO.	PART NUMBER	DESCRIPTION	QTY.
1	TSK72M23W	TOP, SIDE KIT,72",M,23,W	2
2	TCK72HM23W	TOP,CLOSE KIT,72",HM23,W	1
3	TRK7223W	TOP, ROOF KIT,72",23,W	1
4	THKNFT172M23	HDW KIT, TFKNFT172HM23W	1
5	TMLHK	Topper Mechanical Lock Hatch Kit	1

*** E-LOCK VERSION SWAP TMLHK WITH TELH05**

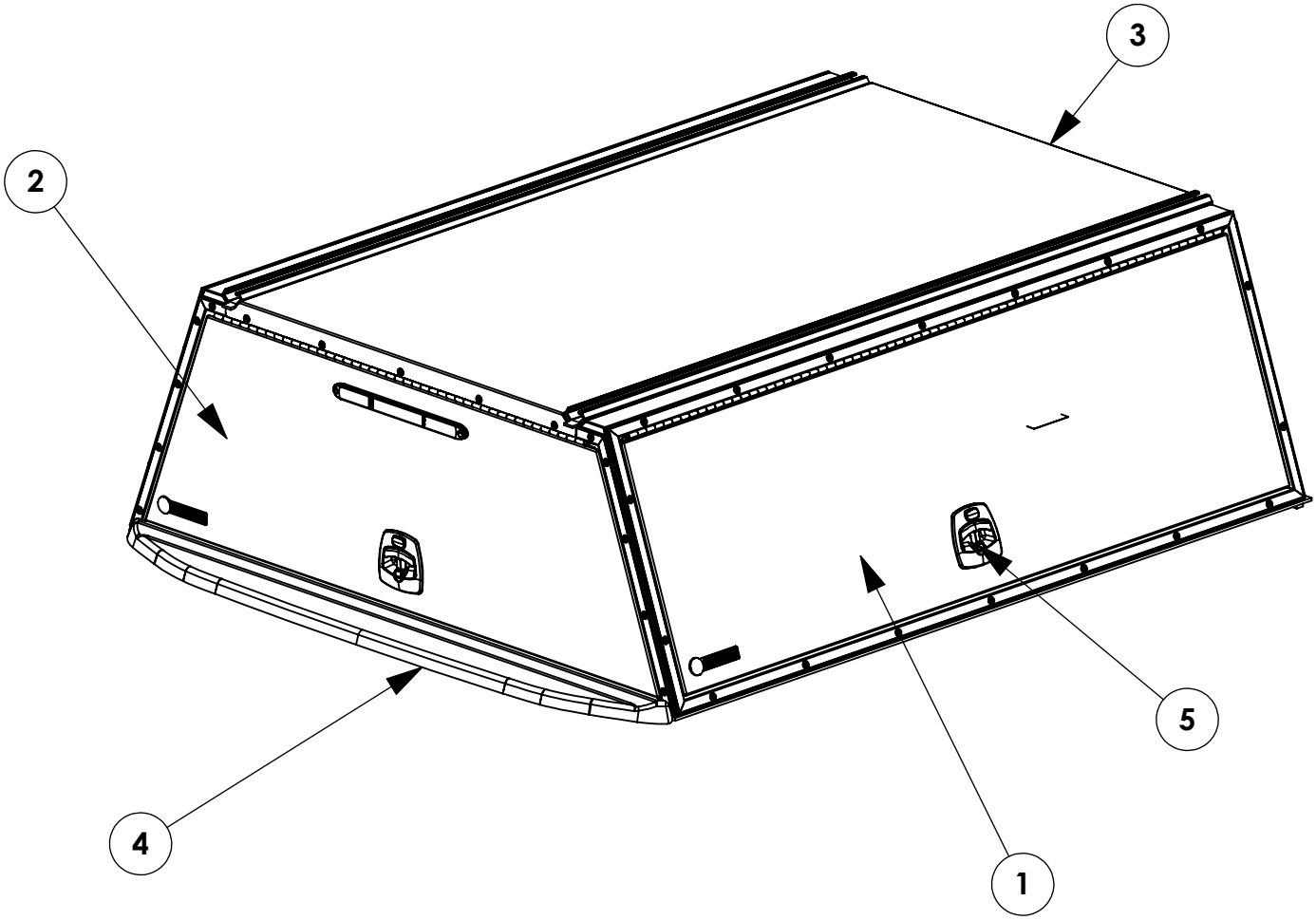

INSTR. NUMBER : 71622	PG: 8	REV: W
PART NUMBER : TFKNFT160HM23W		
PART DESC. : ASM INS, TFK__T178HM23W		

E-LOCK VERSIONS:
SWAP M WITH E IN PART NUMBER
EXAMPLE: TFKFDT178HM23W
BECOMES TFKFDT178HE23W

BOM FOR 5.0' 23" TALL NISSAN FRONTIER

ITEM NO.	PART NUMBER	DESCRIPTION	QTY.
1	TSK60M23W	TOP, SIDE KIT,60",M,23,W	2
2	TCK72HM23W	TOP,CLOSE KIT,72",HM23,W	1
3	TRK6023W	TOP, ROOF KIT,60",23,W	1
4	THKNFT172M23	HDW KIT, TFKNFT172HM23W	1
5	TMLHK	Topper Mechanical Lock Hatch Kit	1

*** E-LOCK VERSION SWAP TMLHK WITH TELH04**

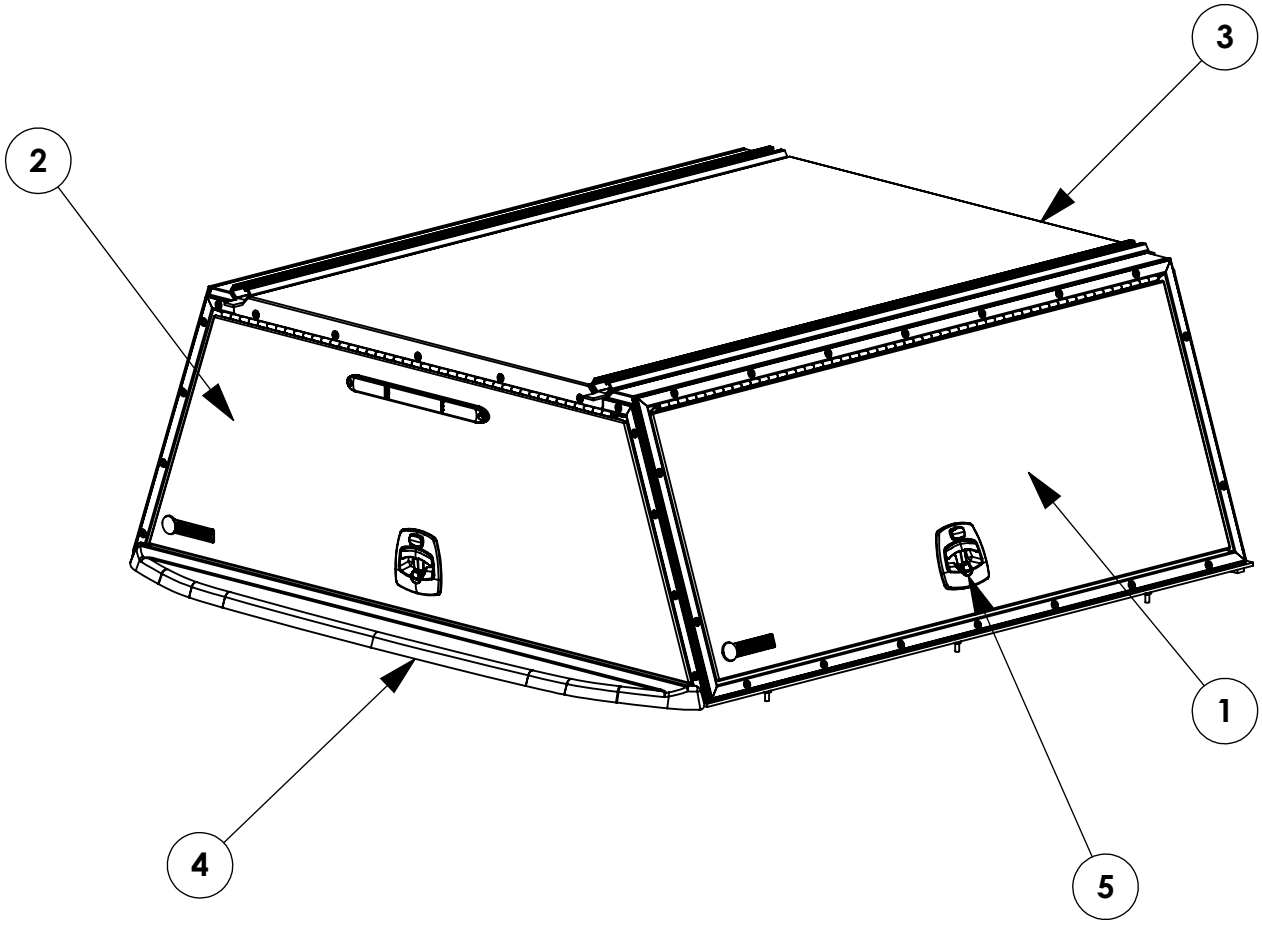

INSTR. NUMBER : 71622	PG: 9	REV: W	BOM FOR 5.1' 23" TALL COLORADO

PART NUMBER : **TFKNFT160HM23W**

PART DESC. : ASM INS, TFK__T178HM23W

ITEM NO.	PART NUMBER	DESCRIPTION	QTY.
1	TSKCOL60M23W	TOP, SIDE KIT,60",M,23,W	2
2	TCK72HM23W	TOP,CLOSE KIT,72",HM23,W	1
3	TRK6123W	TOP, ROOF KIT,61",23,W	1
4	THKCOL60M23	HDW KIT, TFKCOL160HM23W	1
5	TMLHK	Topper Mechanical Lock Hatch Kit	1

E-LOCK VERSIONS:
SWAP M WITH E IN PART NUMBER
EXAMPLE: TFKFDT178HM23W
BECOMES TFKFDT178HE23W

*** E-LOCK VERSION SWAP TMLHK WITH TELH04**

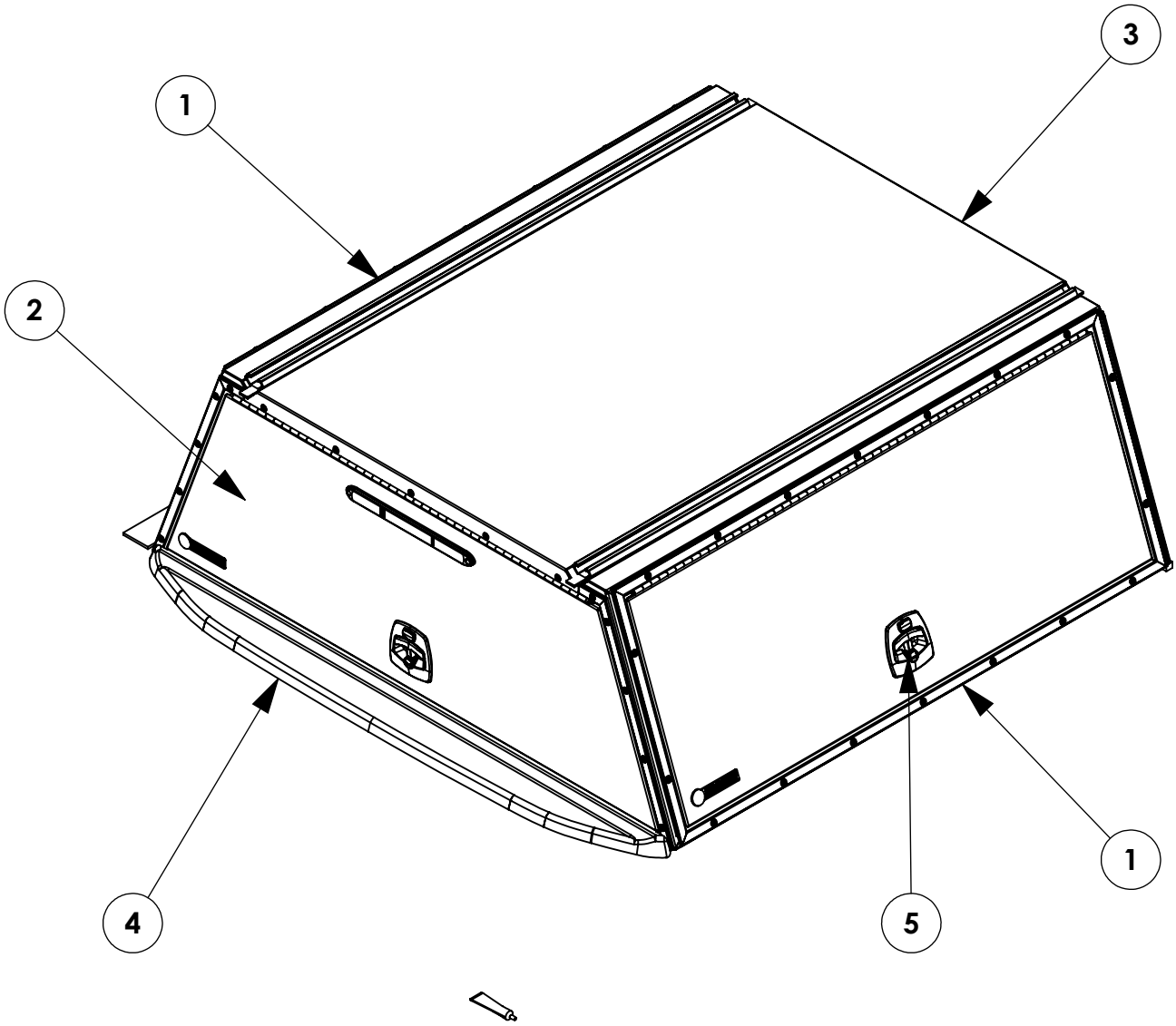

INSTR. NUMBER : 71622	PG: 10	REV: W

PART NUMBER : **TFKGME169HM23W**

PART DESC. : ASM INS, TFKGME169HM23W

E-LOCK VERSIONS:
SWAP M WITH E IN PART NUMBER
EXAMPLE: TFKFDT178HM23W
BECOMES TFKFDT178HE23W

BOM FOR 69" 23" TALL SILVERADO EV 1500

ITEM NO.	PART NUMBER	DESCRIPTION	QTY.
1	TSK69M23WPS	TOP, SIDE KIT,SILVERADO EV, 69", PS	1
2	TSK69M23WDS	TOP, SIDE KIT,SILVERADO EV, 69",DS	1
3	TCKGMEHM23W	TOP,CLOSE KIT,SILVERADO EV,HM23,W	1
4	TRKGME6923W	TOP, ROOF KIT,69",23,W	1
5	THKGME169M23	HDW KIT, TFKGME169HM23W	1
6	TMLHK	Topper Mechanical Lock Hatch Kit	1

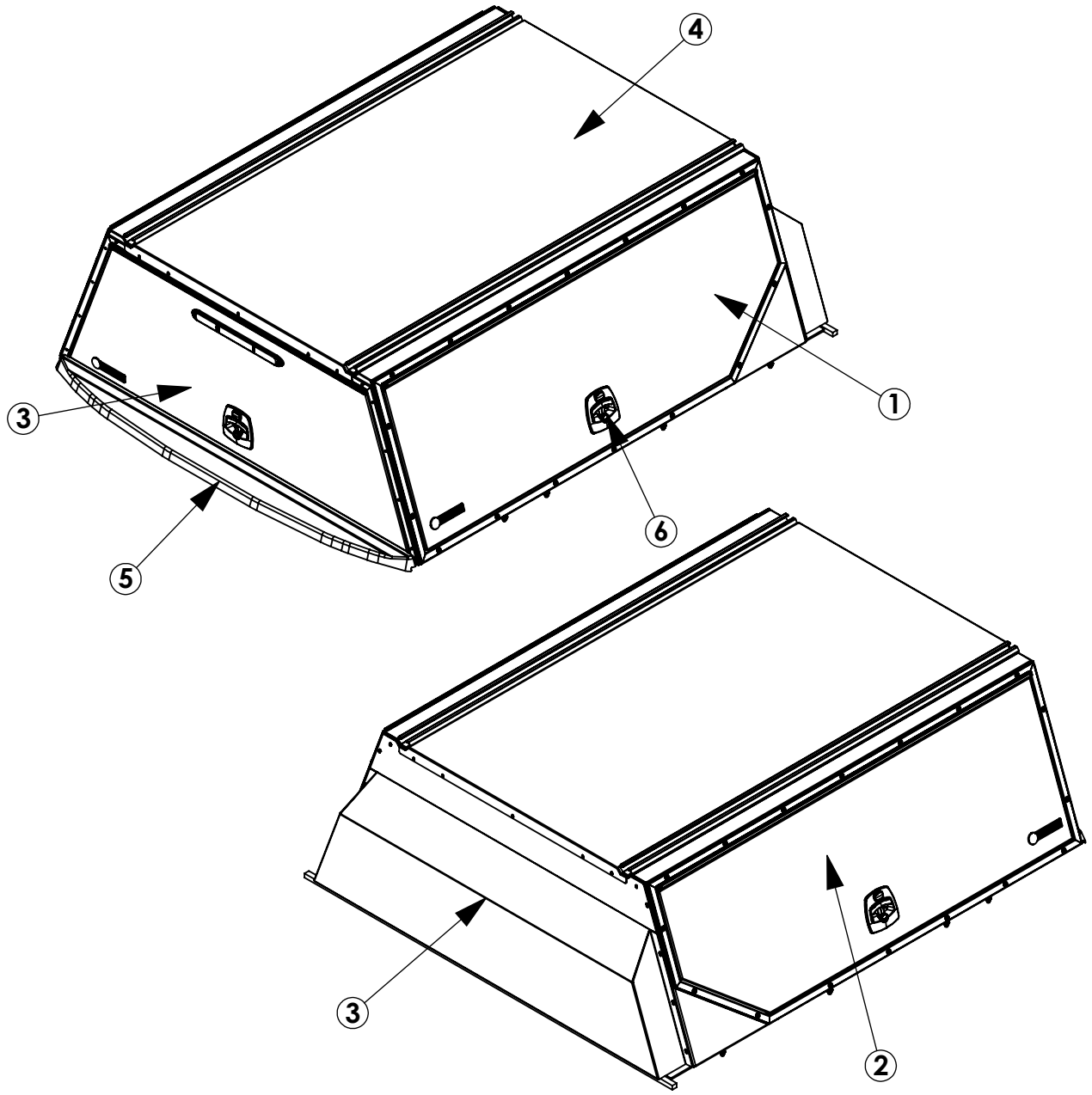

INSTR. NUMBER : 71622	PG: 11	REV: W
PART NUMBER : TFKGMT280HM23W		
PART DESC. : ASM INS, TFK__T178HM23W		

BOM FOR 80" 23" TALL SILVERADO 2500, 3500

ITEM NO.	PART NUMBER	DESCRIPTION	QTY.
1	TSK80M23W	TOP, SIDE KIT,80",M,23,W	2
2	TCK78HM23W	TOP,CLOSE KIT,78",HM23,W	1
3	TRK8026W	TOP, ROOF KIT,80",26,W	1
4	THKGMT280M23	HDW KIT, TFKGMT280HM23W	1
5	TMLHK	Topper Mechanical Lock Hatch Kit	1

E-LOCK VERSIONS:
SWAP M WITH E IN PART NUMBER
EXAMPLE: TFKFDT178HM23W
BECOMES TFKFDT178HE23W

*** E-LOCK VERSION SWAP TMLHK WITH TELH03**

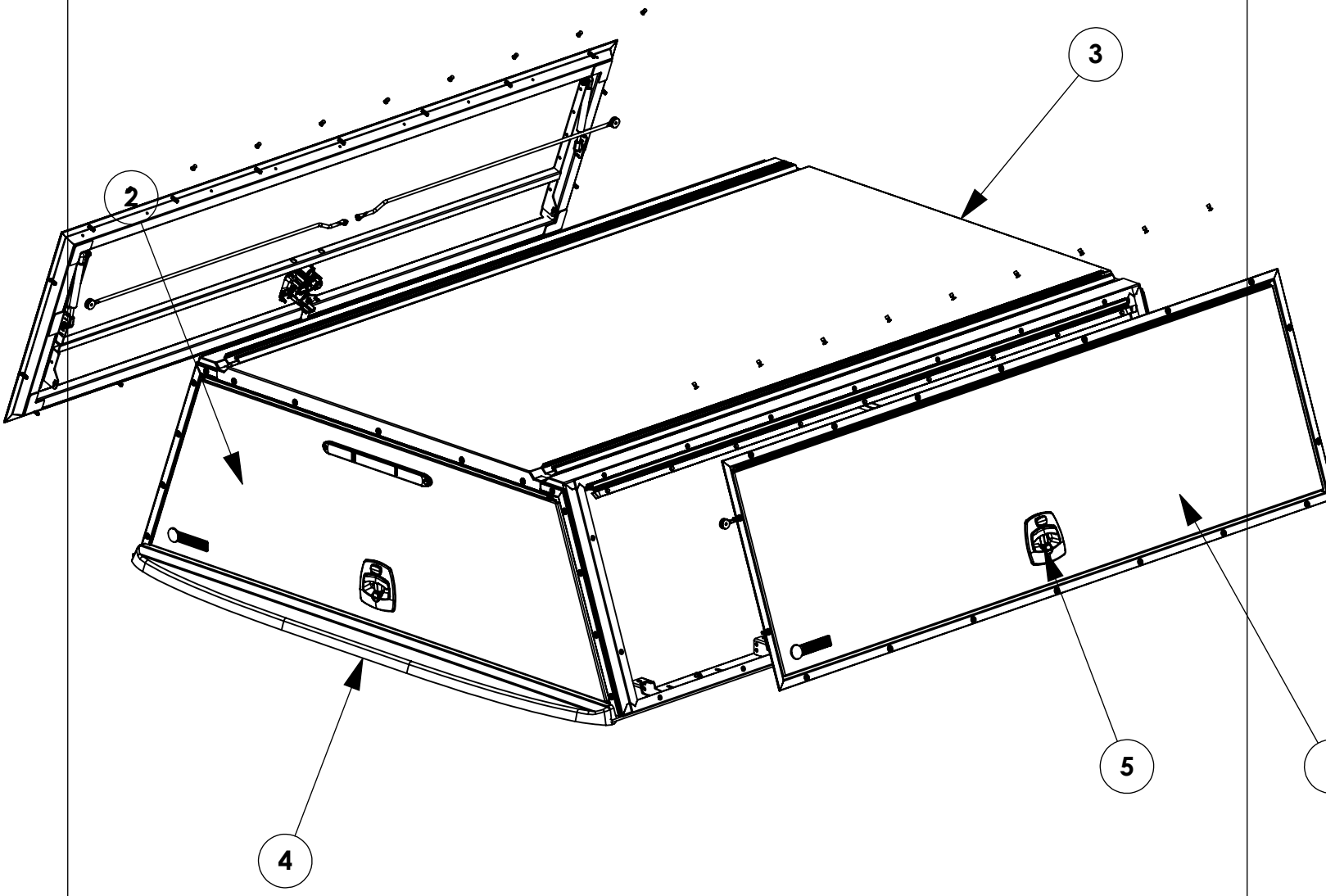

INSTR. NUMBER : 71622	PG: 12	REV: W
PART NUMBER : TFKGMT170HM23W		
PART DESC. : ASM INS, TFK__T178HM23W		

BOM FOR 70" 23" TALL SILVERADO 1500

ITEM NO.	PART NUMBER	DESCRIPTION	QTY.
1	TSK70M23W	TOP, SIDE KIT,70",M,23,W	2
2	TCK78HM23W	TOP,CLOSE KIT,78",HM23,W	1
3	TRK7023W	TOP, ROOF KIT,70",23,W	1
4	THKGMT280M23	HDW KIT, TFKGMT280HM23W	1
5	TMLHK	Topper Mechanical Lock Hatch Kit	1

E-LOCK VERSIONS:
SWAP M WITH E IN PART NUMBER
EXAMPLE: TFKFDT178HM23W
BECOMES TFKFDT178HE23W

*** E-LOCK VERSION SWAP TMLHK WITH TELH03**

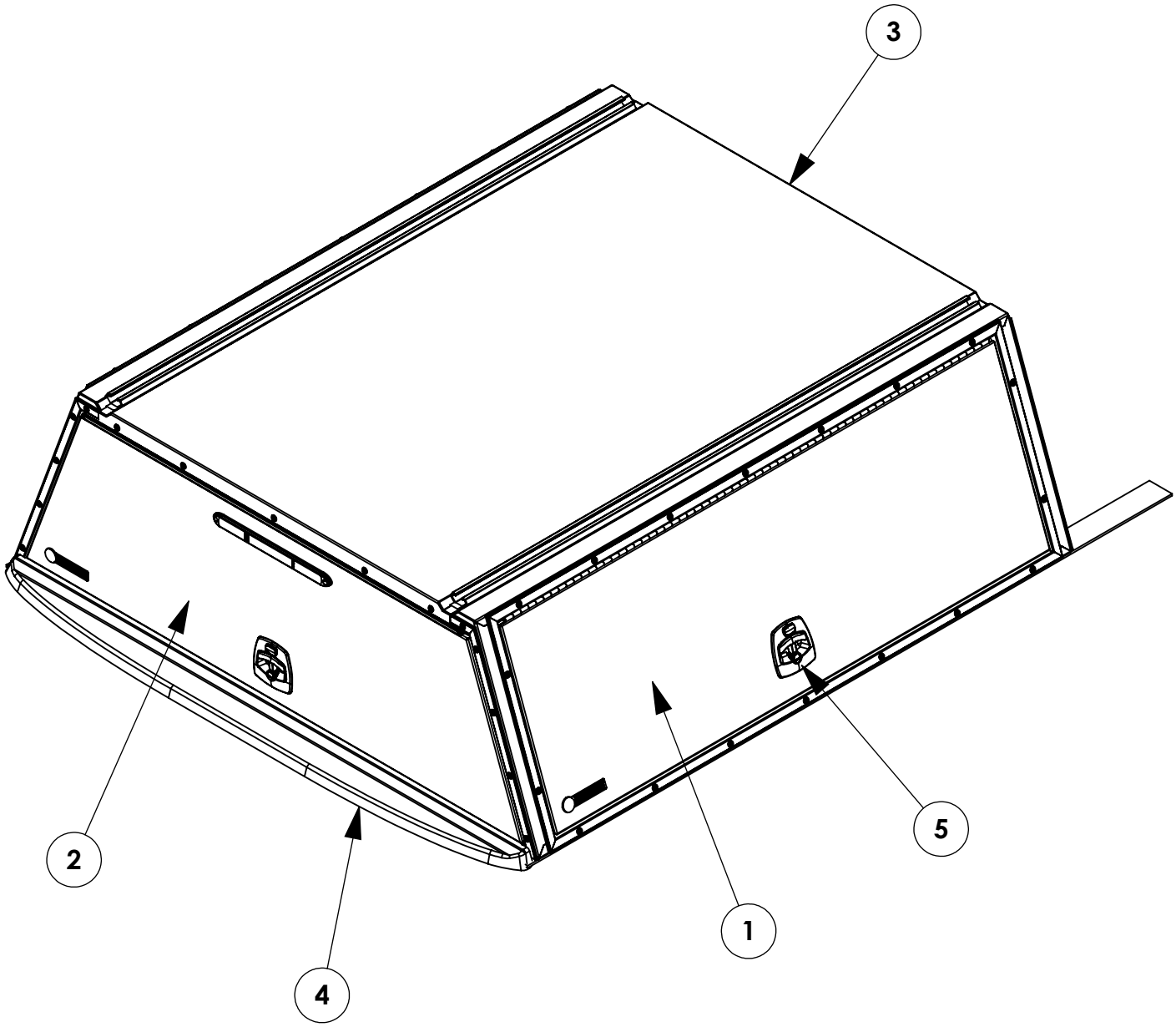

BEST PRACTICES

GET TO KNOW THE VEHICLE - AT THE BEGINNING OF ANY INSTALLATION, CHECK THE LOCATION OF THE FUEL TANK, FUEL LINES, BRAKE LINES, HIGH VOLTAGE BATTERIES AND WIRING HARNESSES TO AVOID INJURY OR PROPERTY DAMAGE FROM TOOL CONTACT.

SEAL ALL EXTERIOR HOLES - ALL INSTALLATION HOLES SHOULD BE SEALED WITH BUTYL TAPE OR SILICON TO PREVENT WATER AND EXHAUST GASES FROM ENTERING THE VEHICLE.

CONTROL DRILL DEPTH - TO AVOID DAMAGE TO THE VEHICLE, USE A DRILL STOP OR CLEARED STEP BIT WHEN DRILLING INSTALLATION HOLES.

ALWAYS ADD PRIMER - WHEN ADDING INSTALLATION HOLES BE SURE TO USE A SELF-ETCHING PRIMER TO PREVENT CORROSION, FASTENER FAILURE AND INJURY.

MOUNTING POINTS MUST HAVE METAL-TO-METAL CONTACT - USE PROVIDED MOUNTING SPACERS TO ACCOMMODATE FOR VEHICLE FEATURES, CARPET OR SUBFLOORS.

PROVIDE CLEARANCE FOR SPACERS - IF THE INSTALLATION VEHICLE CONTAINS A CARPET OR SUBFLOOR, USE A 1-3/16" DIAMETER CARPET CUTTER (P/N: 31183-0) AT ALL MOUNTING LOCATIONS TO OPEN UP ROOM FOR SPACERS.

CHECK SPACER ORIENTATION - BE SURE THAT THE INDENT IN THE SPACER COVERS THE PLUSNUT HEAD; THIS ENSURES THE MOST METAL-TO-METAL CONTACT AND REDUCES VIBRATION.

PLUSNUT INSTALLATION - A PLUSNUT GUN IS RECOMMENDED FOR PLUSNUT INSTALLATION FOR ITS PRODUCTION SPEED. HOWEVER, A PLUSNUT SETTING TOOL CAN ALSO BE USED (P/N: 22200-0).

THRU-BOLT CLEARANCE - WHEN USING A THRU-BOLT AT ANY MOUNTING LOCATION, BE SURE THAT YOUR HOLE HAS 1/16" CLEARANCE.

INTENTIONALLY LEFT BLANK

BEST PRACTICE: ORGANIZE ALL FASTENERS & VERIFY THAT ALL ARE ACCOUNTED FOR

FASTENERS USED

BAG REFERENCE: **ALL**

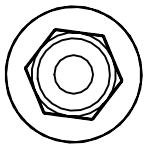

FAS0055
1/4-20 ZP
HFLNG NLK NUT
QTY: 10

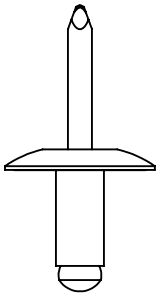

FAS1014
.25X.11GR AL
RIVET, BLND
QTY: 5

FAS0919
5/16-18 X 1.25 SST
BHC SCREW
QTY: 10

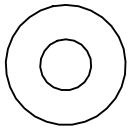

FAS0234
1/4 SST
FLAT WASHER
QTY: 30

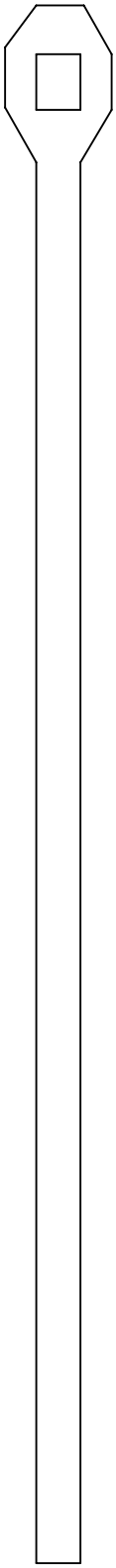

78320
7.5" STUD MNT
CABLE TIE
QTY: 5

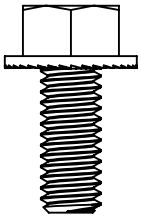

FAS0438
5/16-18 X .75 ZP
HFNLG SCREW
QTY: 16

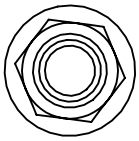

FAS0440
5/16-18 ZP
HFLNG NLK NUT
QTY: 16

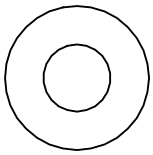

FAS0552
5/16 SST
FLAT WASHER
QTY: 10

FAS0940
1/4-20 X 1.0 SS NP
BHTX SCREW
QTY: 30

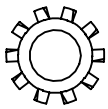

FAS0066
1/4 LOCK WASHER
EXT. TOOTH
QTY: 1

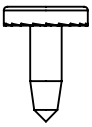

FAS0148
#10 X 0.5 NI-ZN
PH SELF DRILL SCREW
QTY: 1

INTENTIONALLY LEFT BLANK

BEST PRACTICE: ORGANIZE ALL FASTENERS & VERIFY THAT ALL ARE ACCOUNTED FOR

FASTENERS USED

BAG REFERENCE: **ALL**

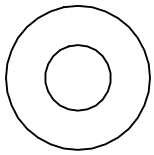

FAS0164
5/16 ALUM
FLAT WASHER
QTY BAG71794: 0
QTY BAG71801: 8

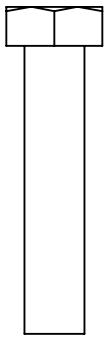

FAS0242
5/16-18 X 1.5 SST
HH SCREW
QTY BAG71794: 8
QTY BAG71801: 8

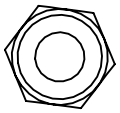

FAS0248
5/16-18 SST
HH NLK NUT
QTY BAG71794: 8
QTY BAG71801: 8

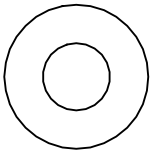

FAS0552
5/16 SST
FLAT WASHER
QTY BAG71794: 16
QTY BAG71801: 8

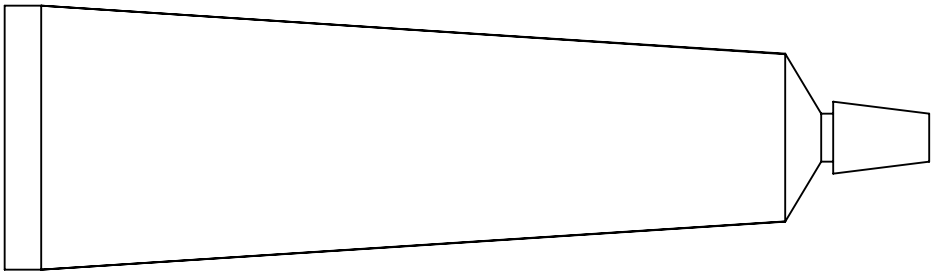

26618-0
1 OZ TUBE
SILICONE
QTY BAG71794: 2
QTY BAG71801: 2
QTY THKCOL60M23: 1

INTENTIONALLY LEFT BLANK

FASTENERS USED

BAG REFERENCE: **BAG76637**

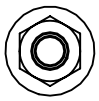

FAS0917
M5 X .8 ZP
HFLNG NLK NUT
QTY: 12

FAS0918
10-24 ZP
HFLNG NLK NUT
QTY: 6

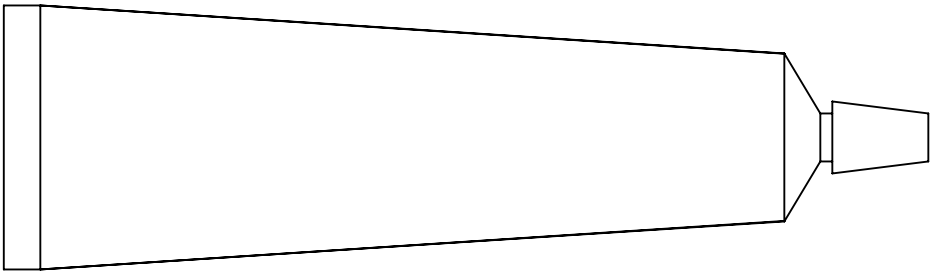

26618-0
1 OZ TUBE
SILICONE

INTENTIONALLY LEFT BLANK

STEP 1 - ASSEMBLE BODY FRAME: SIDES AND CROSSBOWS

Step 1.1
OPEN [x2] TOPPER SIDE KITS [TSK78M23W]

Step 1.2
OPEN TOPPER ROOF KIT [TRK7823W]

Step 1.3
FULLY TIGHTEN FAS0438 AND FAS0440 (16 PLACES)
1/2" WRENCH
1/2" SOCKET

Step 1.4
ADD FOAM STRIP 80402 TO THE MIDDLE OF EACH CROSSBOW (4 PLACES)

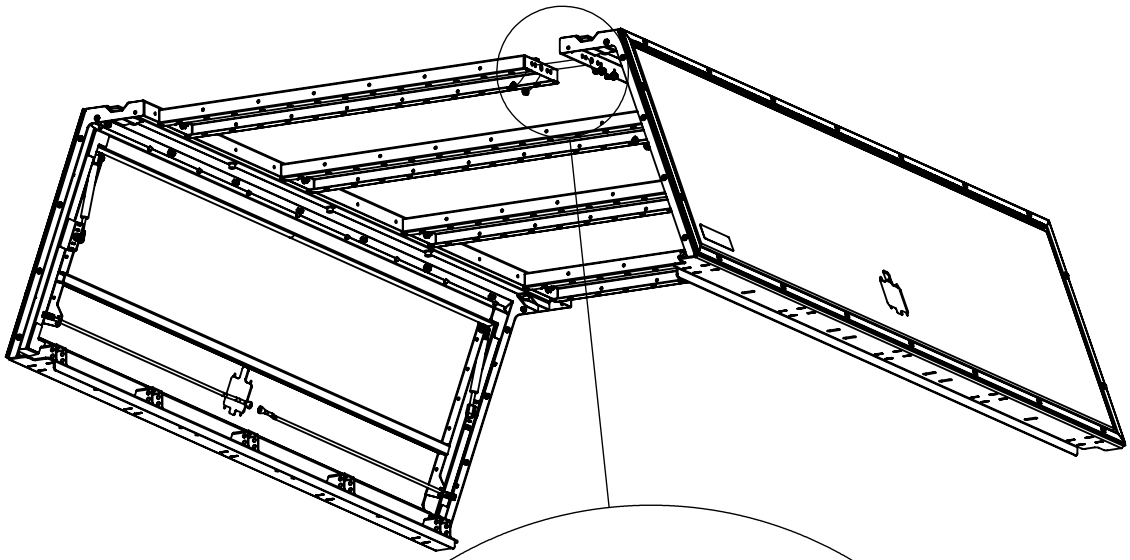

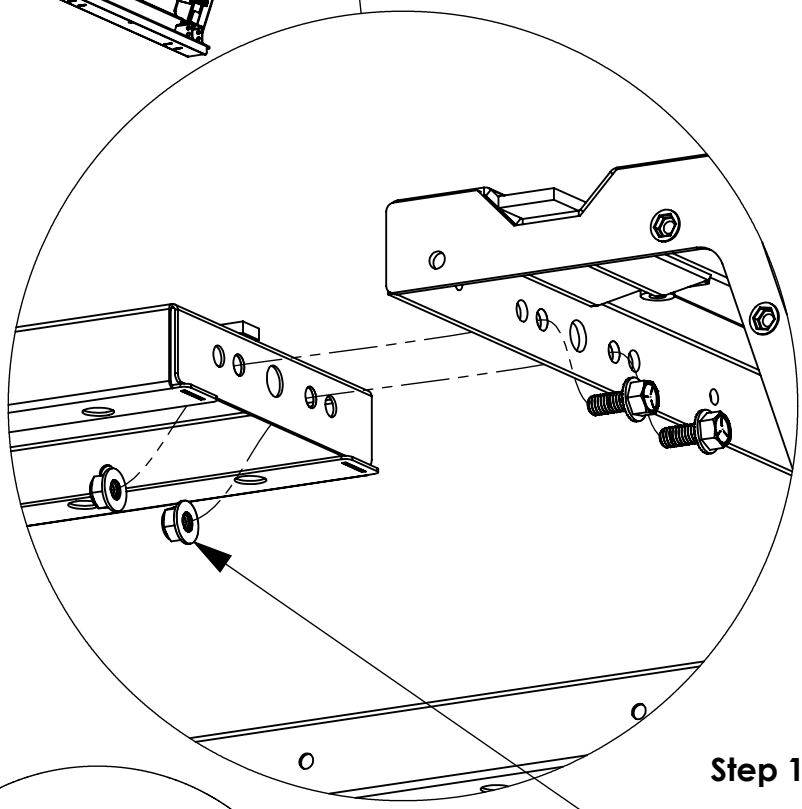

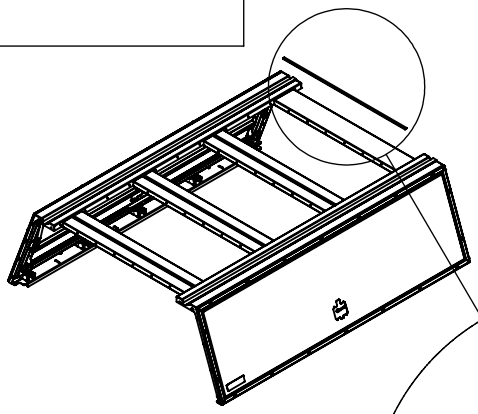

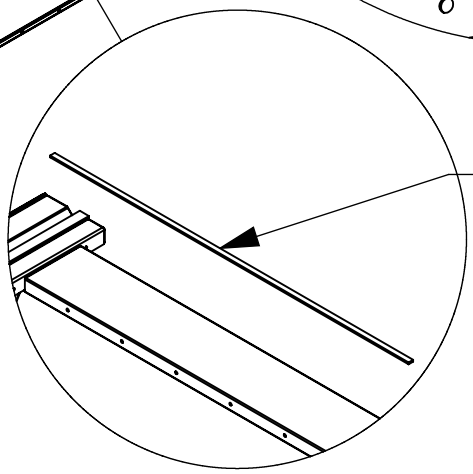

STEP 2 - ATTACH HARDWARE: SIDE DOOR HANDLES, FRONT & REAR SEALS

Step 2.1
CUT ZIP TIES THAT ARE HOLDING LOCKRODS IN PLACE.

!! CAUTION !! DOORS MAY TRY TO OPEN.

Step 2.2
ATTACH HANDLE TO DOOR

FULLY TIGHTEN
FAS0917
(4 PER DOOR)
M10 SOCKET

DO NOT OVERTIGHTEN

Step 2.3
ATTACH LOCKRODS TO HANDLE

FULLY TIGHTEN
FAS0918
(2 PLACES)
M8 SOCKET

DO NOT OVERTIGHTEN

Step 2.4
ADJUST HANDLE POINT TO ALIGN WITH CASTING LINE ON HANDLE BODY (APPROX: 1.0")

FULLY TIGHTEN 4mm ALLEN (2 PLACES)

Step 2.5
APPLY FOAM SEALS TO ALL CORNERS.

USE HOLES IN SEAL TO ALIGN MATERIAL.

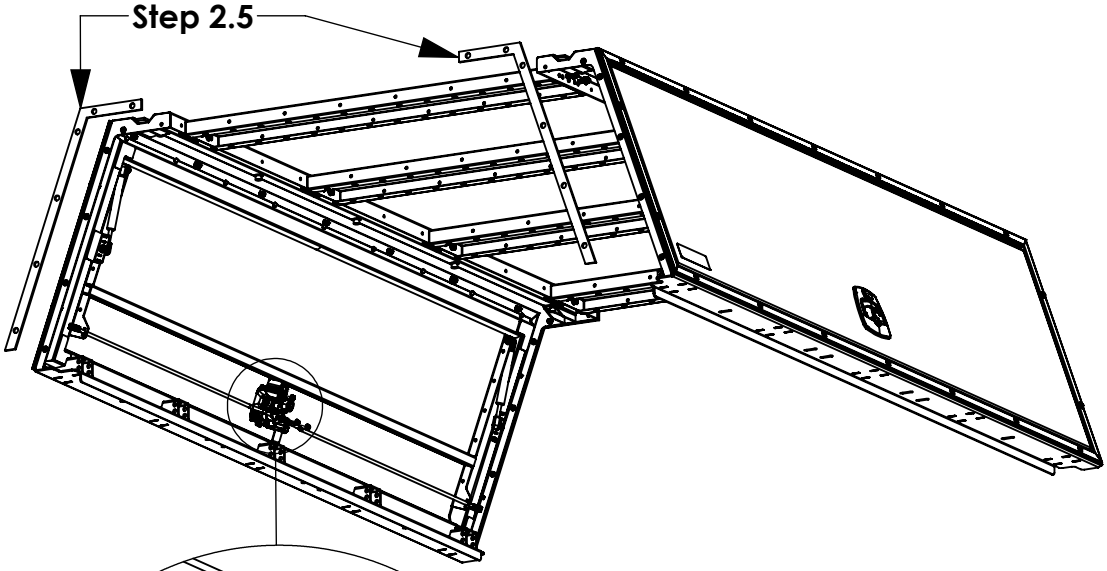

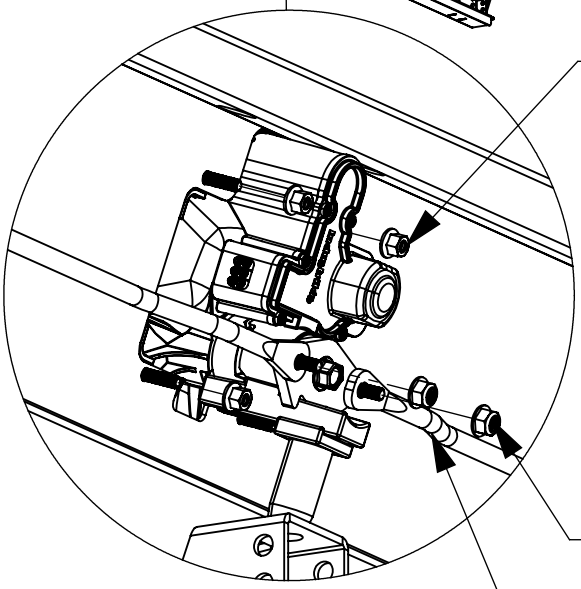

STOP **STEP 2.2 & 2.3 HAVE DIFFERENT SIZED FASTENERS**

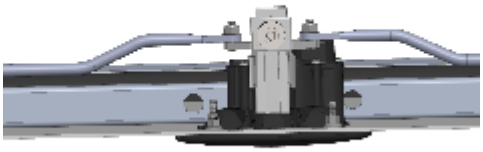

NOTE THAT ORIENTATION OF LOCKRODS IS CRITICAL STOP

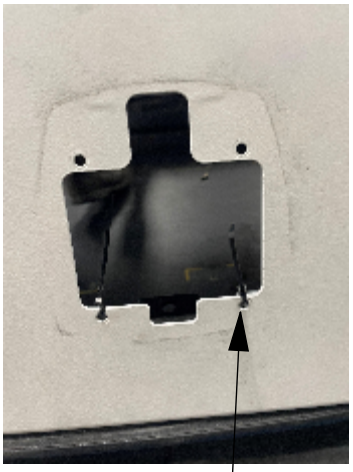

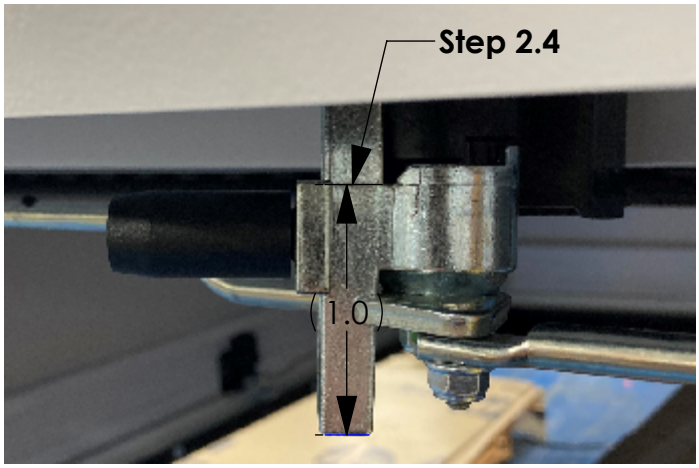

STEP 3 - ATTACH FRONT PANEL

Step 3.1
OPEN TOPPER CLOSURE KIT [TCK78HM23W]

Step 3.2
ATTACH FRONT PANEL

HAND TIGHTEN
FAS0234, FAS0940 (10 PLACES)

DO NOT TIGHTEN UNTIL AFTER STEP 4

Step 3.2B
COLORADO FRONT PANEL FLANGE IS OUTBOARD

DO NOT TIGHTEN UNTIL AFTER STEP 4

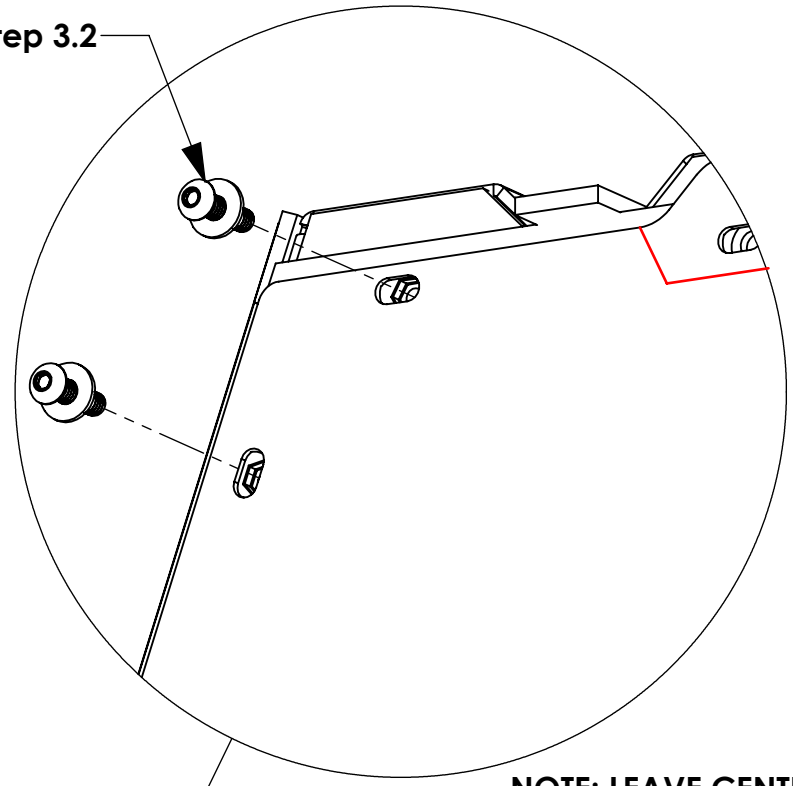

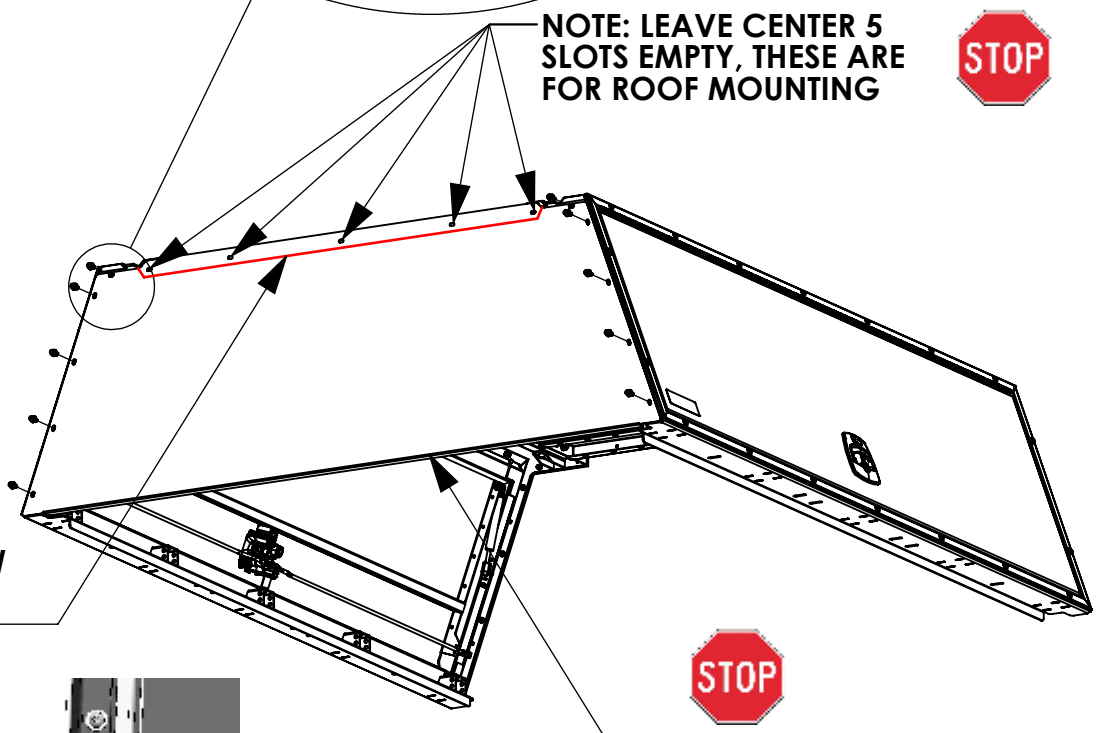

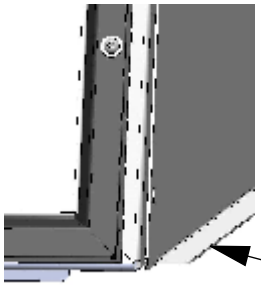

STEP 4 - ATTACH LIFTGATE

Step 4.1
ATTACH LIFTGATE FRAME

FULLY TIGHTEN
FAS0234, FAS0940
(10 PLACES)
5/32" ALLEN

Step 4.2
GO BACK AND FULLY TIGHTEN FASTENERS FROM STEP 3.2

(10 PLACES)
5/32" ALLEN

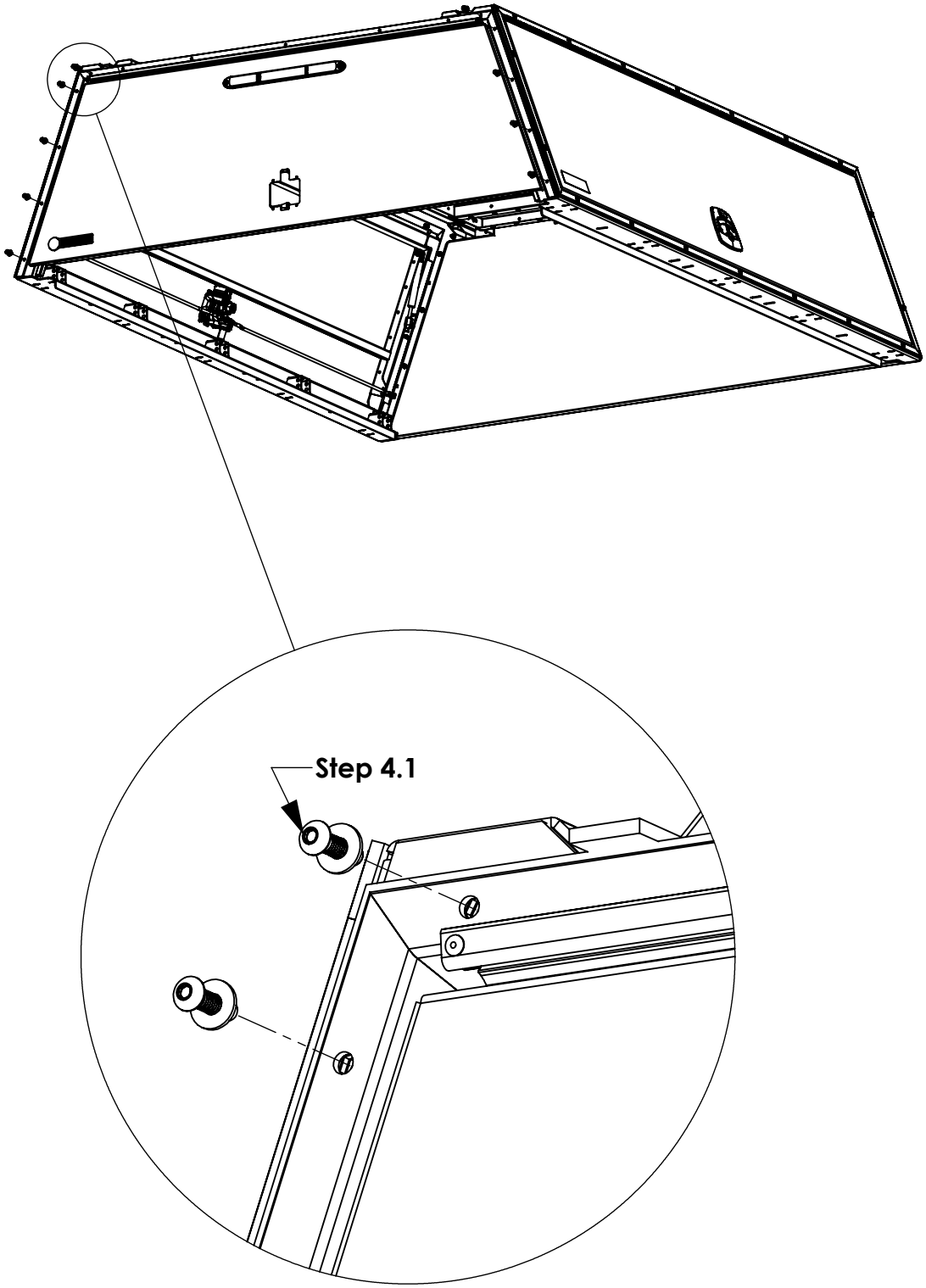

STEP 5 - ATTACH LIFTGATE HANDLE

Step 5.1
CUT ZIP TIES THAT ARE HOLDING LOCKRODS IN PLACE.

!! CAUTION !!
DOOR MAY TRY TO OPEN.

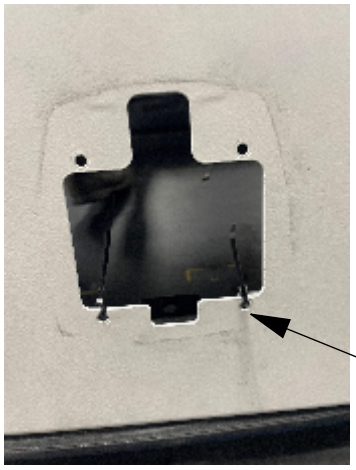

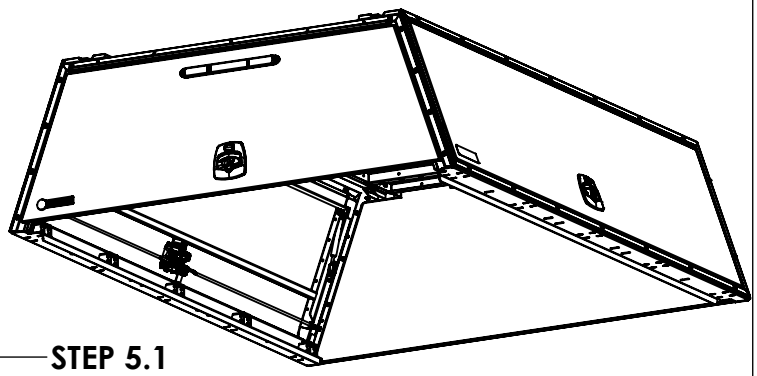

Step 5.2
ATTACH HANDLE TO DOOR

<u>FULLY TIGHTEN</u>
FAS0917
(4 PER DOOR)
M10 SOCKET

DO NOT OVERTIGHTEN

Step 5.3
ATTACH LOCKRODS TO HANDLE

<u>FULLY TIGHTEN</u>
FAS0918
(2 PLACES)
M8 SOCKET

DO NOT OVERTIGHTEN

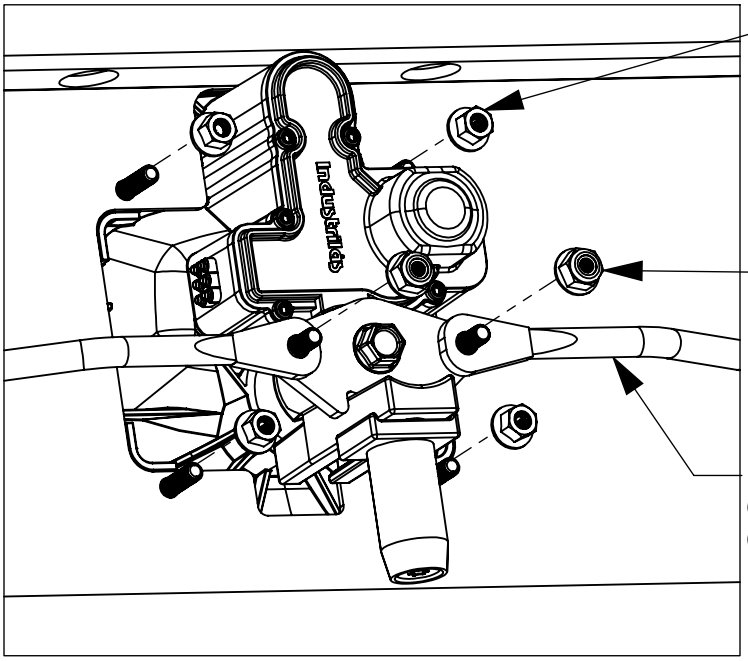

Step 5.4
ADJUST HANDLE POINT TO ALIGN WITH CASTING LINE ON HANDLE BODY
(APPROX: 1.0")

FULLY TIGHTEN
M4 ALLEN
(2 PLACES)

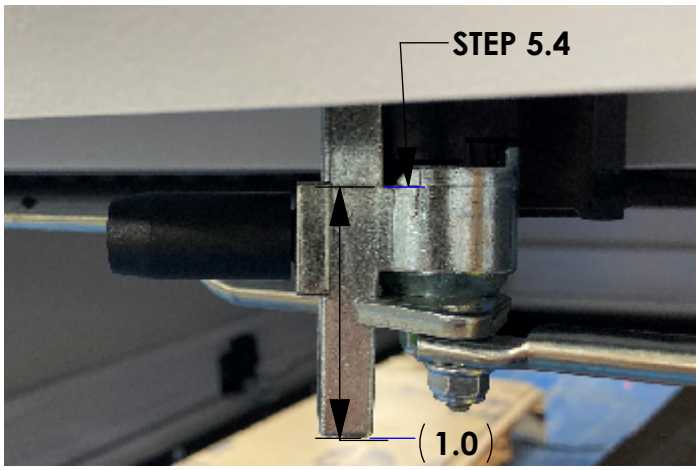

STEP 6 - ATTACH ROOF AND ROOF RAILS

Step 6.1
PLACE ROOF PANEL ON TOPPER BODY, BUT SLID FORWARD OF FRONT PANEL TO AVOID REMOVING SILICONE APPLIED IN STEP 3. THEN SLIDE ROOF PANEL INTO CORRECT POSITION.

Step 6.2
ATTACH MOUNTING RAILS TO TOPPER BODY.

USE AN ALIGNMENT PUNCH TO POKE THROUGH SEALS

<u>FULLY TIGHTEN</u>
FAS0552,
FAS0919
(10 PLACES)
3/16" ALLEN

Step 6.3
ATTACH ROOF TO TOPPER BODY.

<u>FULLY TIGHTEN</u>
FAS0055,
FAS0552,
FAS0940
(10 PLACES)
5/32" ALLEN
7/16" WRENCH

STOP

PLEASE NOTE THAT ORDER OF OPERATIONS ON THESE BUILD STEPS IS CRITICAL TO A PROPER SEAL!

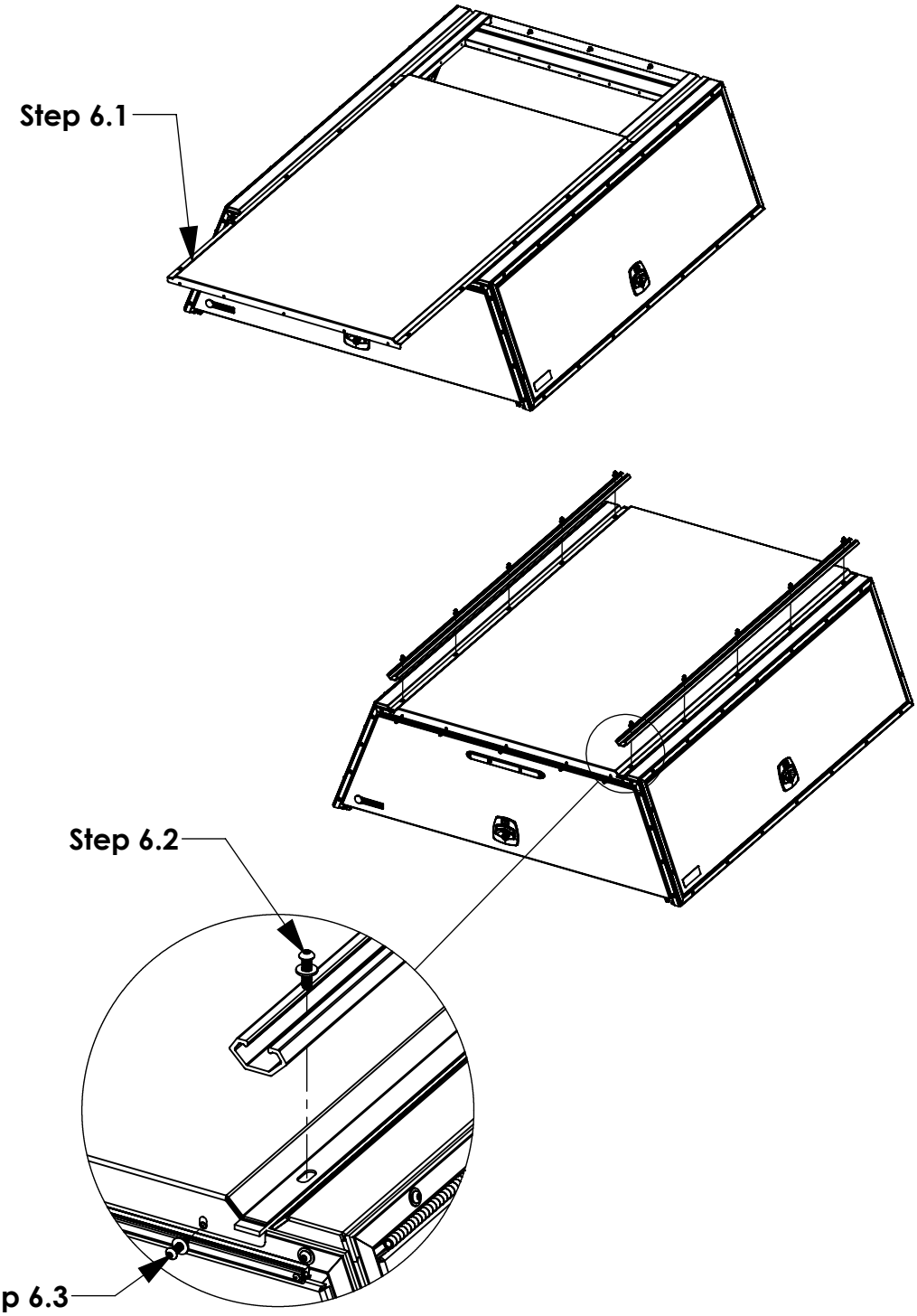

STEP 7 - ATTACH TAILGATE COVER

Step 7.1
ADD SILICONE TO CORNER OF TAILGATE COVER AND AROUND BOTTOM FACE MOUNTING HOLES.

Step 7.2
ATTACH TAILGATE COVER TO REAR DOOR.

<u>FULLY SECURE</u>
FAS1014
(5 PLACES)

1/4" RIVET TIP

Step 7.3
COLORADO & SILVERADO.
PREP WITH 57392 ADHESION PROMOTER.

ADD 77152 D-SEAL X 22" LG TO BOTH SIDE OF TAILGATE COVER

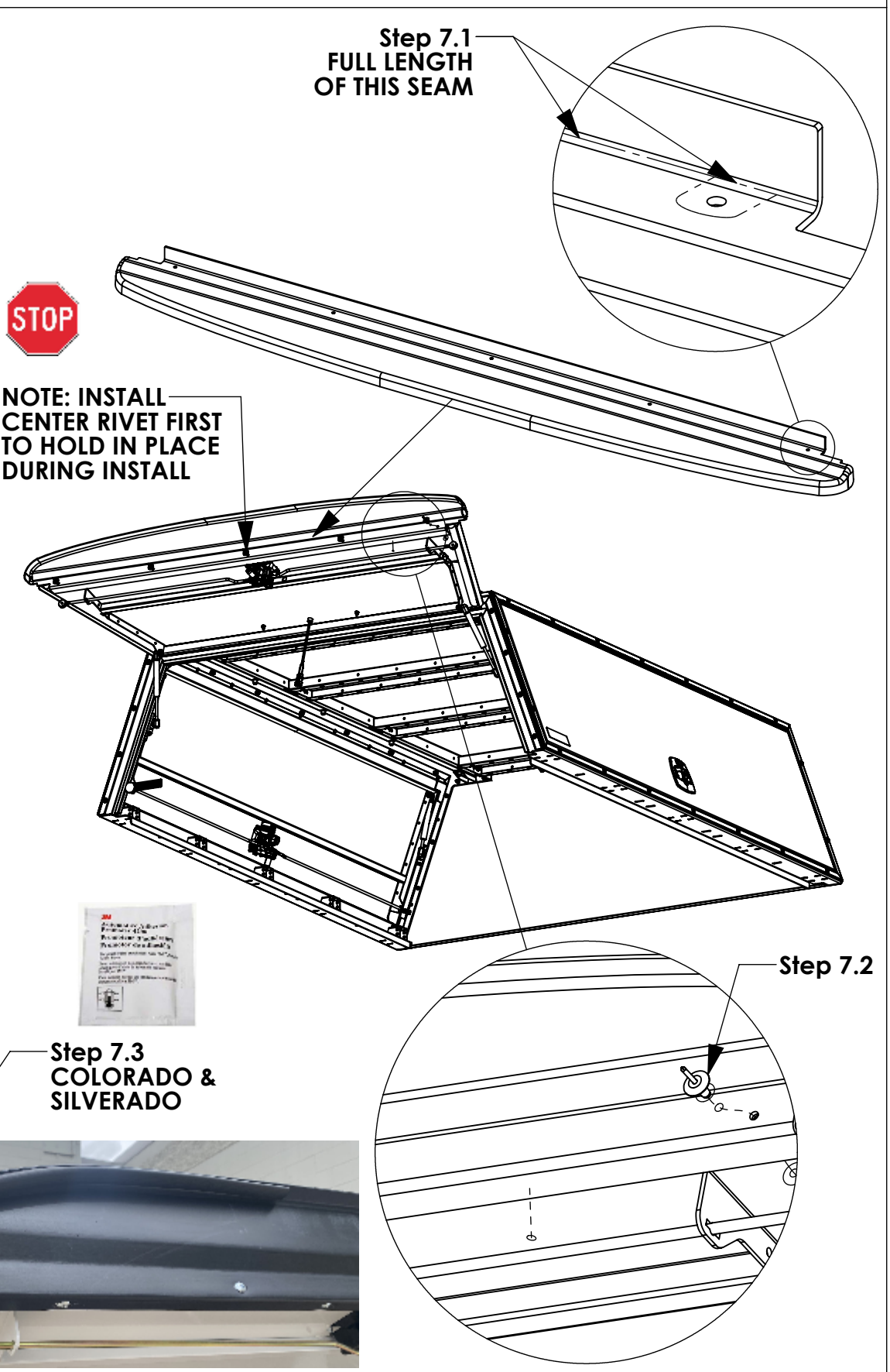

STEP 8 - ATTACH SEALS TO TRUCK BED

Step 8.1
INSTALL FRONT BED SEAL. REFER TO TABLE 1 TO GET OEM SPECIFIC DISTANCE OFF OF THE INSIDE EDGE OF THE BED. CENTER BETWEEN THE DRIVER AND PASSENGER SIDE BED RAIL TRIM.

TRIM OFF EXTRA, IF NECESSARY.

Step 8.2
INSTALL SIDE BED SEALS. ALIGN TO THE FRONT AND INSIDE EDGES OF THE SIDE BED RAIL TRIM.

DO NOT TRIM EXCESS UNTIL TOPPER IS ON THE TRUCK.

Step 8.3
COLORADO ONLY !
INSTALL SIDE BED SEALS. ALIGN TO THE FRONT AND INSIDE EDGES OF THE SIDE BED RAIL TRIM.

DO NOT TRIM EXCESS UNTIL TOPPER IS ON THE TRUCK.

TOP VIEW -COLORADO, SILVERADO & RAM, FULL DISTANCE AT FRONT EDGE

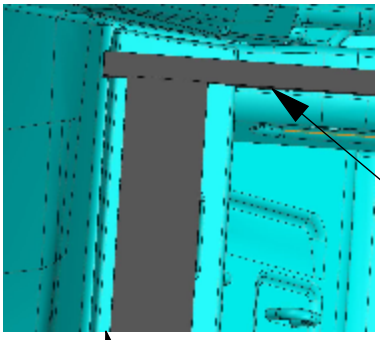

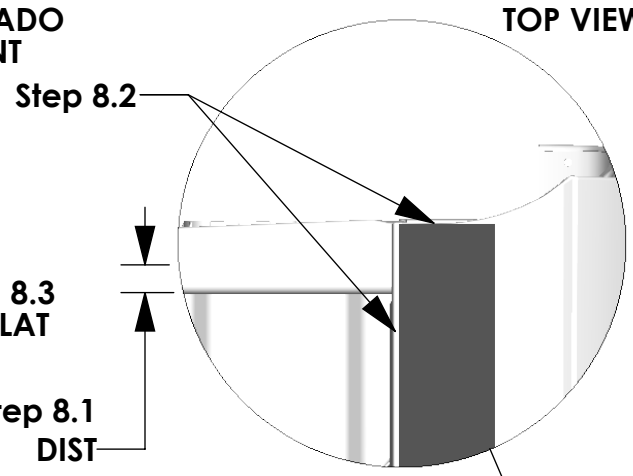

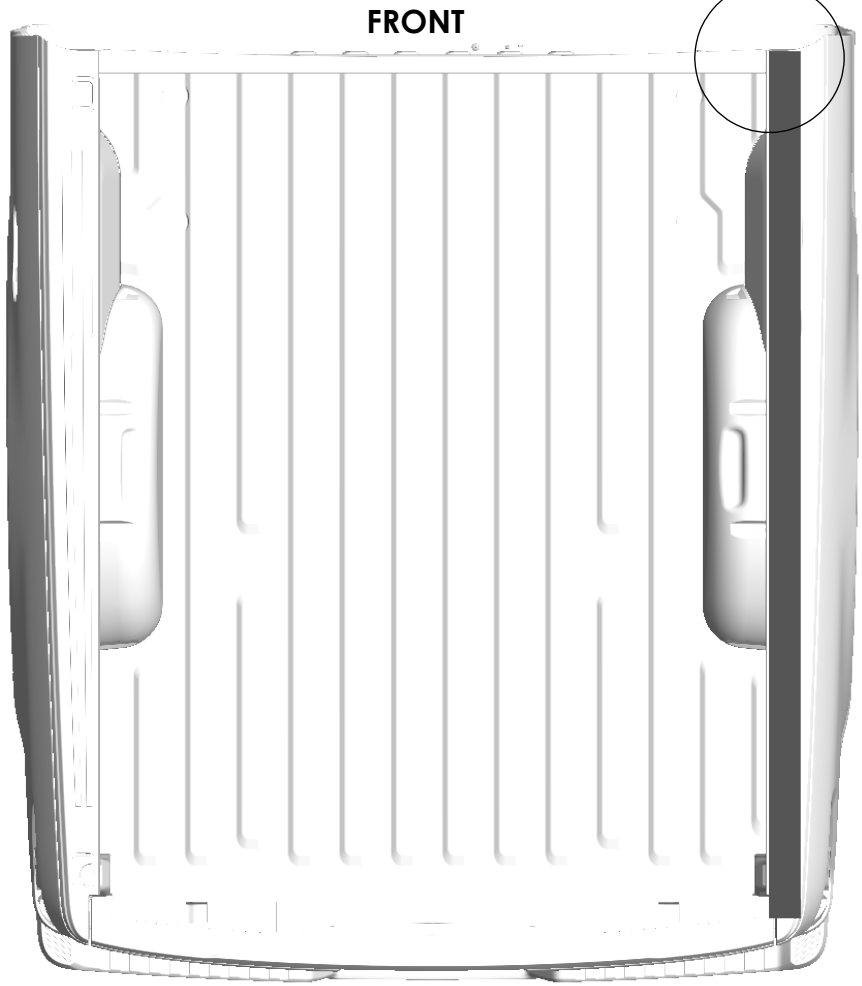

TABLE 1:

VEHICLE PLATFORM	DIST.
F-150	.875"
SILVERADO	0.25"
RAM	.15"

STEP 8.3 CONTINUED - INSTALL FOAM (NOTE: FOR CHEVY COLORADO ONLY)

Step 8.3A
COLORADO ONLY! CUT 74471 IN HALF TO MAKE TWO SEALS. INSTALL ADDITIONAL SIDE BED SEALS (74471 (X1)). ALIGN TO THE FRONT AND INSIDE EDGES OF THE SEALS FROM THE PREVIOUS STEP.

DO NOT TRIM EXCESS UNTIL TOPPER IS ON THE TRUCK.

Step 8.3B
SHIFT TO DRIVERS SIDE OF TRUCK AND MIRROR INSTALLATION OF THE FIRST HALF OF 74471.

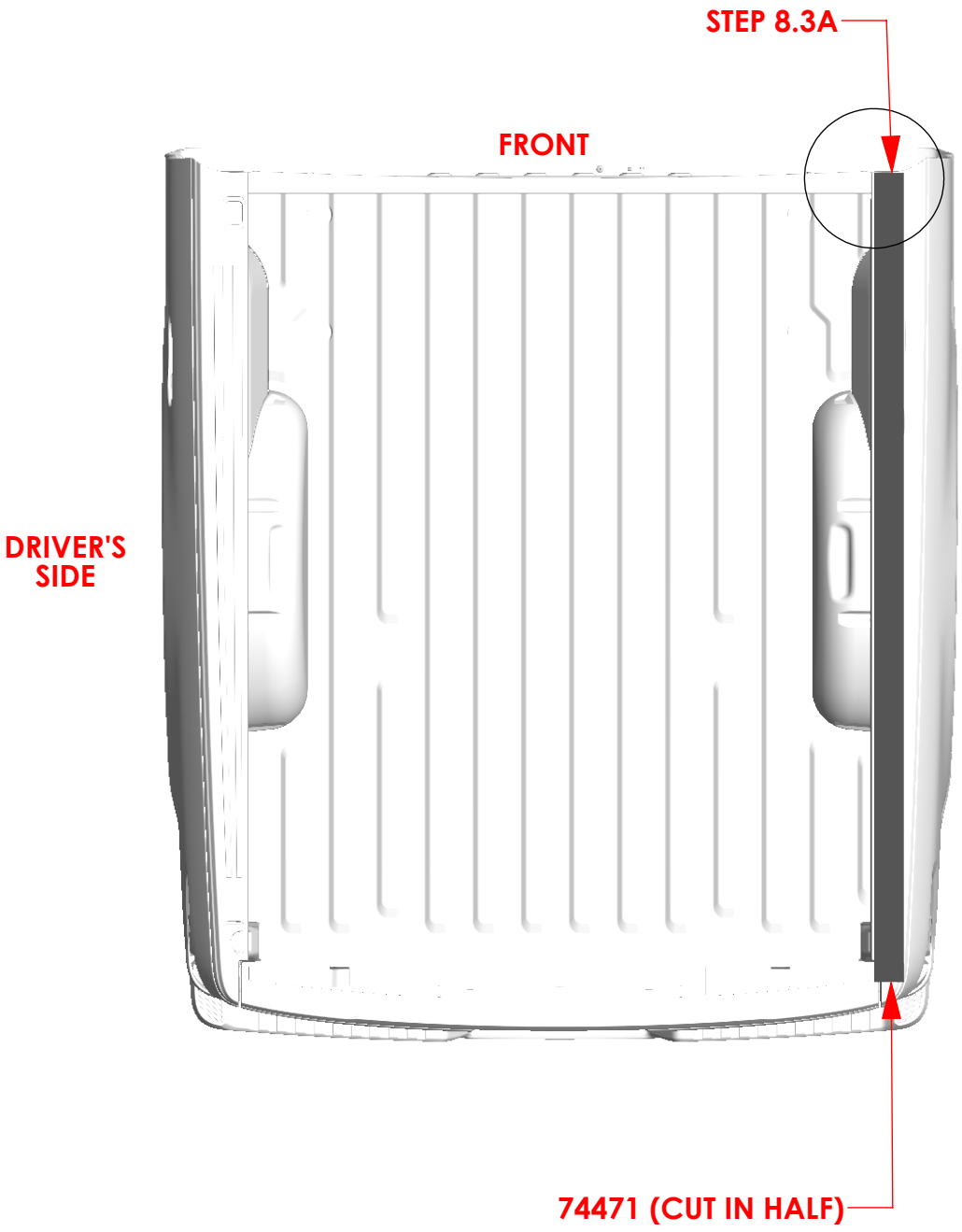

STEP 8 - ATTACH SEALS TO TRUCK BED (NOTE: FOR CHEVY SILVERADO ONLY)

Step 8.4
PLACE 81456 GASKET IN THE GAP BETWEEN THE TRUCK BED AND CAB.

BEFORE ATTACHING TO TRUCK BED, CLEAN AND PREP AREA. DO NOT ATTACH TO PLASTIC TRIM. IF TRIM IS ON FRONT OF BED ATTACH TO CAB.

ONCE AREA IS PREPARED CENTER GASKET ON THE REAR WINDOW.

MAKE SURE THAT GASKET HAS FULL SURFACE CONTACT SO ADHESIVE WILL PROPERLY BOND.

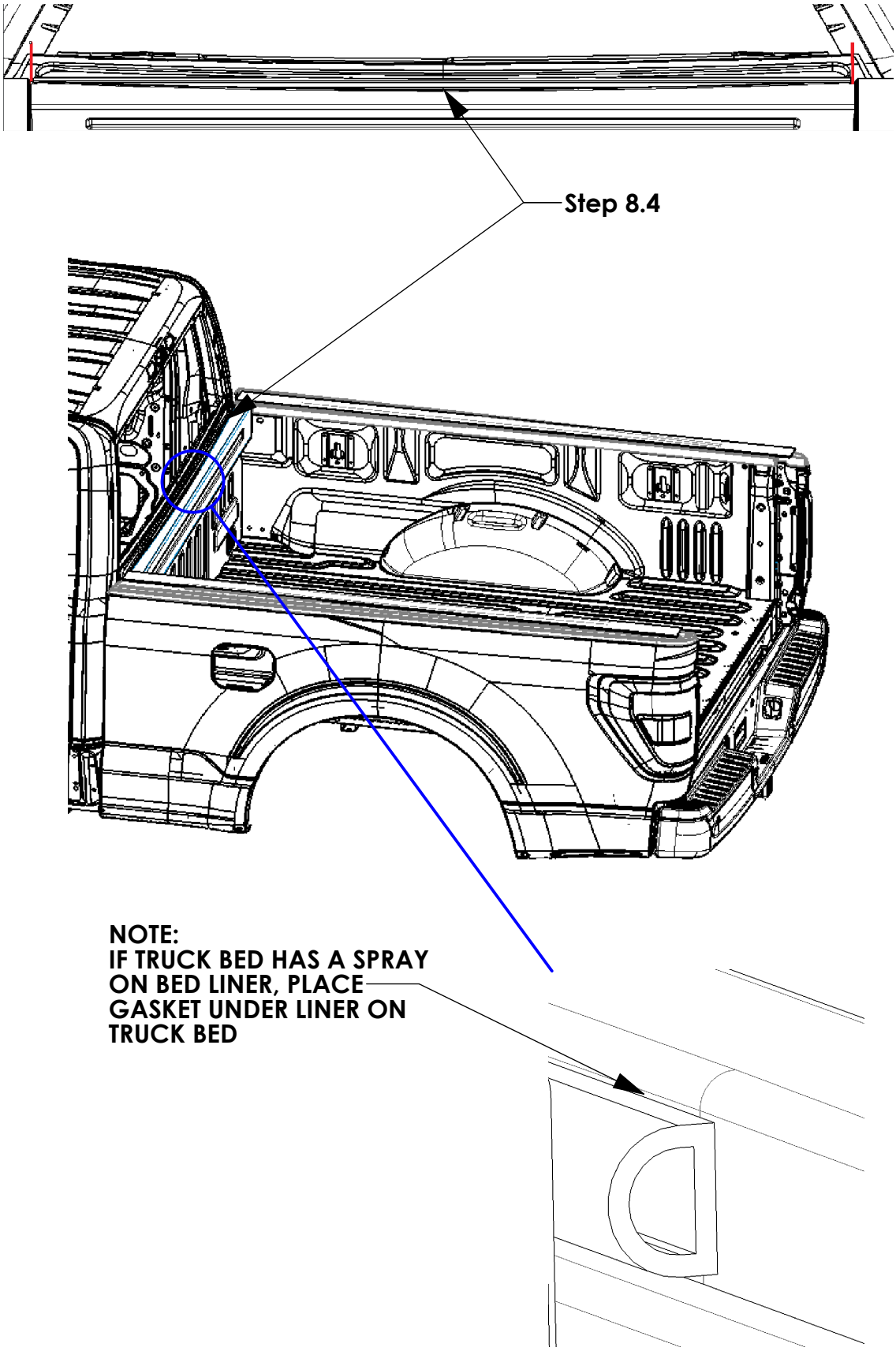

STEP 9A - INSTALL FOAM & 73740 SEALANT TO TRUCK CAB AND BED SEAMS *(NOTE: FOR CHEVY SILVERADO ONLY)*

STEP 9A.1
CUT A 2.5" FOAM PIECE OF 73398, INSERT UNDER TRIM OF THE BED RAIL, GOING INTO THE GAP AS SHOWN

STEP 9A.2
INSERT A 2ND FOAM OF THE SAME DIMENSION INTO THE GAP, PERPENDICULAR TO THE ONE IN STEP 9.1, BOTH PIECES SHOULD BE TOUCHING

STEP 9A.3
SECURE BOTH PIECES OF FOAM IN PLACE WITH 3M SEALANT AROUND THE PERIMETER AND FILL ANY REMAINING GAPS, REPEAT ON PASSENGER SIDE

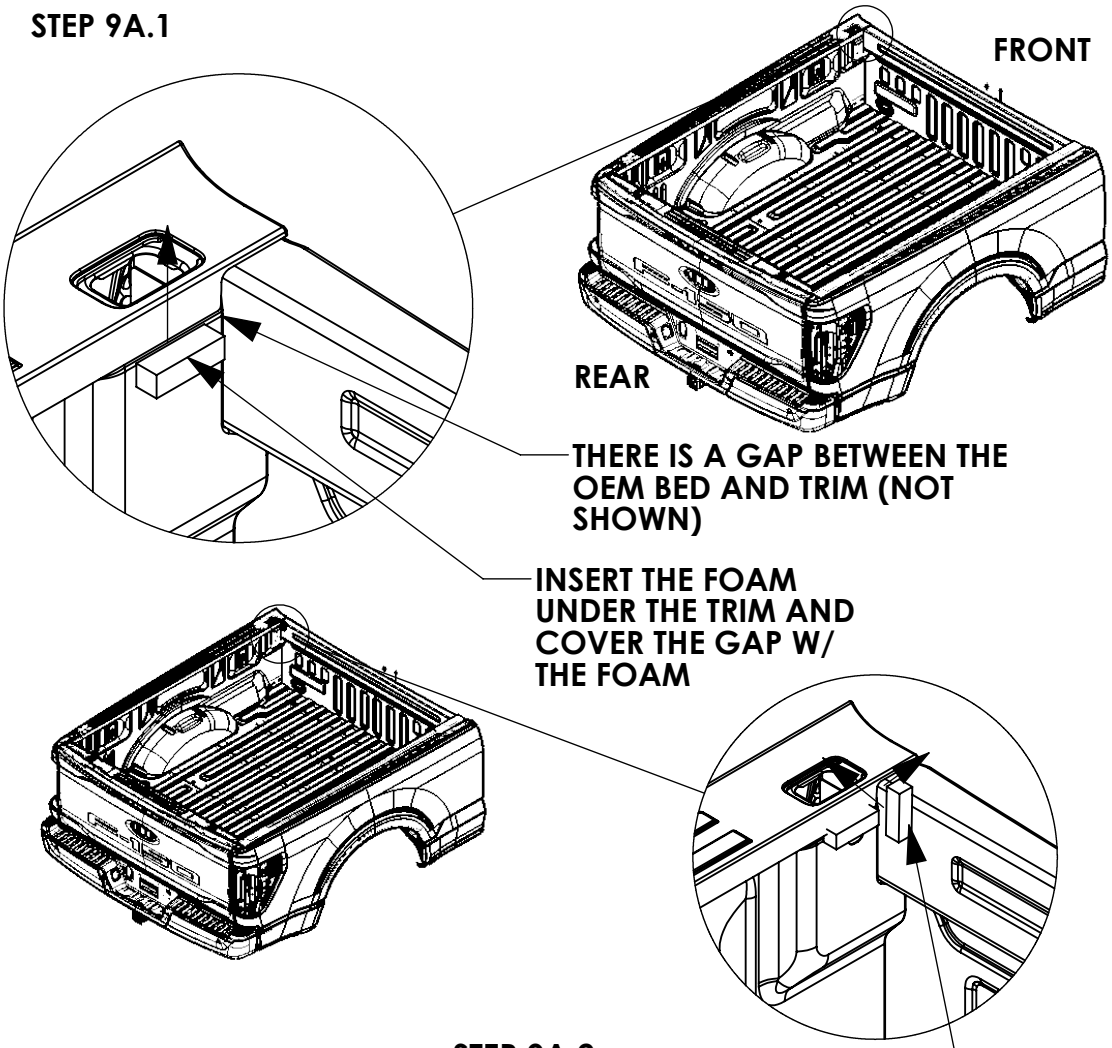

STEP 9A.3

ADD 3M SEALANT AROUND THE PERIMETER OF THE FOAMS, BETWEEN THE RAIL TRIM & THE BED, & REPEAT ON PASSENGER SIDE

STEP 9B - INSTALL FOAM TO TRUCK CAB AND BED SEAMS (NOTE: FOR CHEVY SILVERADO EV ONLY)

STEP 9B.1
PLACE FOAM AROUND TOP OF BED RAILS, STRIPS WILL BUTT UP AGAINST EACH OTHER AT CORNERS

STEP 9B.2
WHEN PLACING TOPPER ON BED, TOPPER WILL NEED TO BE BROUGHT IN LOW AND THEN MOVED FORWARD TO FIT INSIDE TRUCK TRIM. (AS SHOWN)

STEP 9B.3
WITH TOPPER IN PLACE EXCESS TRIM

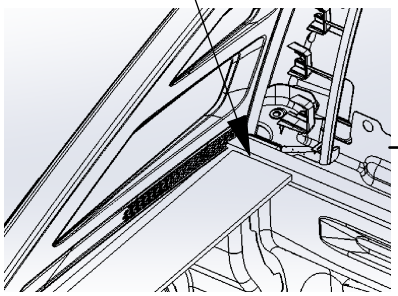

NOTE:
LOCATE DRAIN HOLES AND TRIM FOAM AROUND THEM, TO MAKE SURE HOLES AREN'T BEING BLOCKED

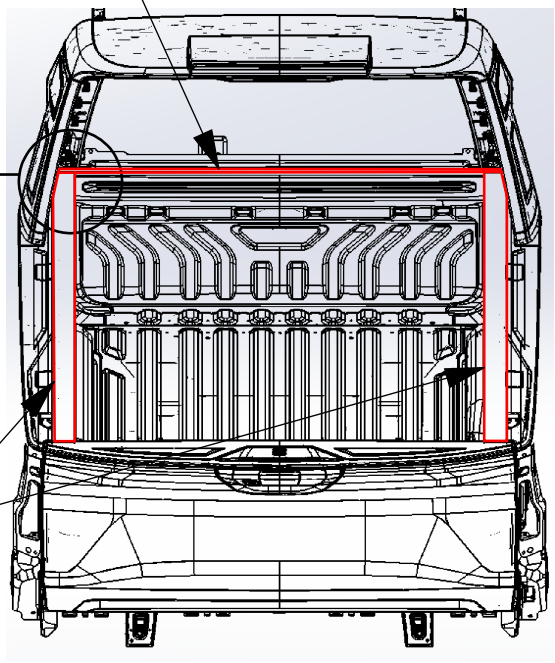

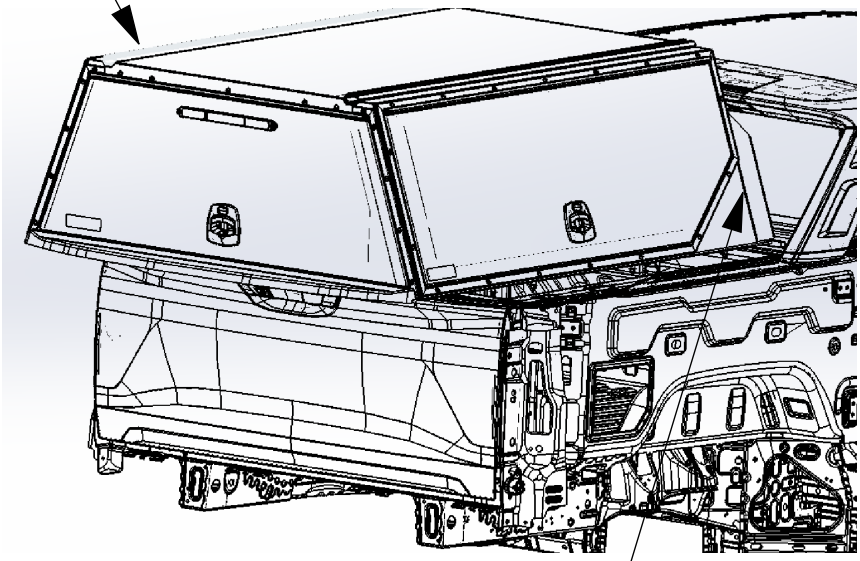

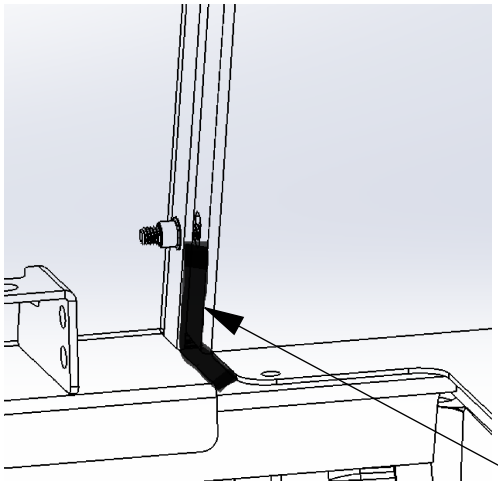

NOTE:
WHEN TOPPER IS IN PLACE USE SLICONE INSIDE OF TOPPER TO SEAL GAPS AT FRONT OF TOPPER . (AS SHOWN)

STEP 9C - INSTALL FOAM, (6) SPACER & 73740 SEALANT TO TRUCK CAB AND BED SEAMS (NOTE: FOR FORD RANGER ONLY)

STEP 9C.1
REMOVE PLUGS LOCATED ON THE TRUCK BED RAIL,

STOP

DO NOT DRILL INTO THE RAIL

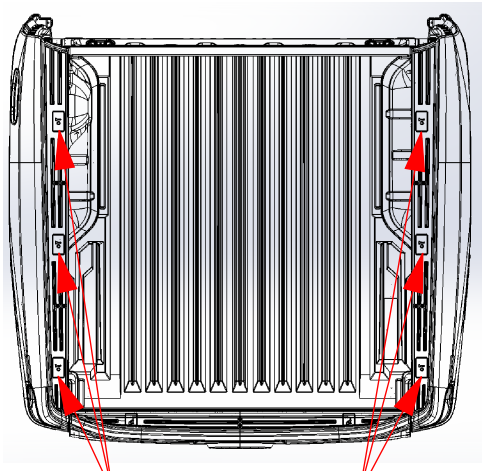

STEP 9C.2
CENTER (6)SPACERS OVER HOLE, TAPE SPACER TO HOLD IT IN THE LOCATION

NOTE:
TALL SPACERS TO BE USED WITH 2025 MODELS,

SHORT SPACERS TO BUT USED WITH 2026 OR NEWER MODELS

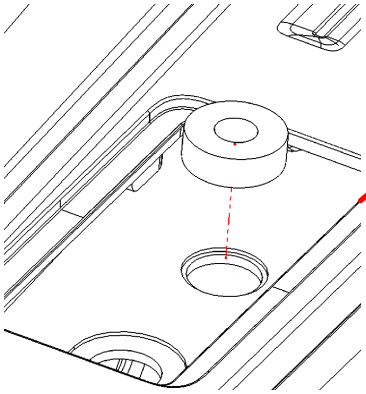

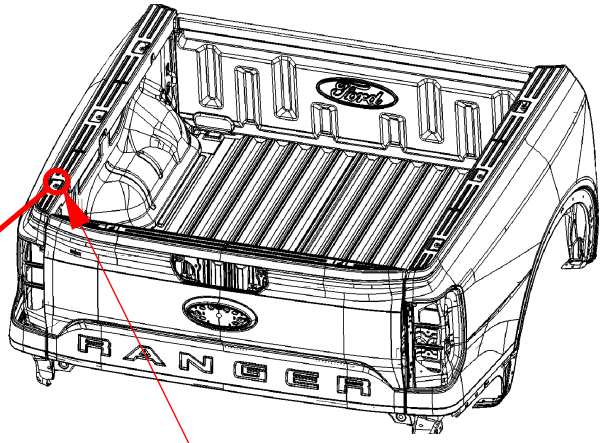

STEP 9C.3
PLACE FOAM AROUND TOP OF BED RAILS, STRIPS WILL BUTT UP AGAINST EACH OTHER AT CORNERS

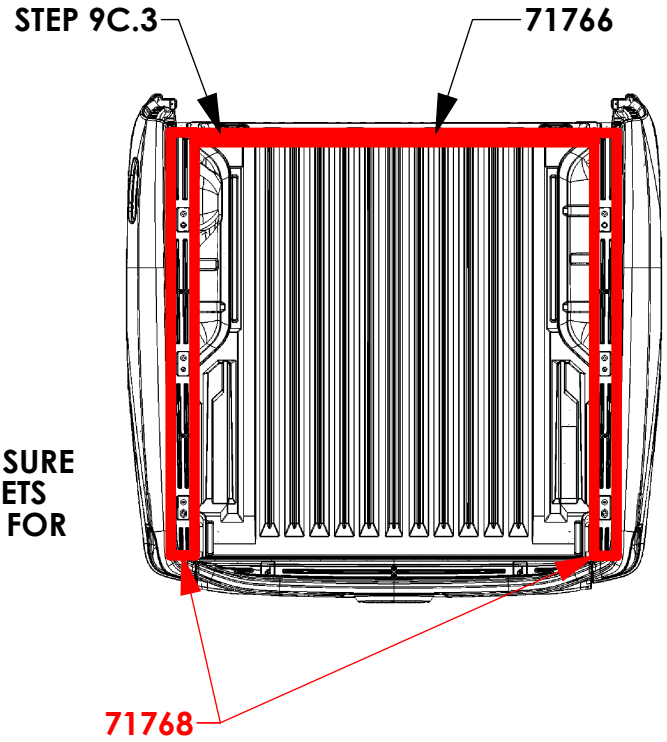

STOP

NOTE:
BEFORE INSTALL PREP IS STARTED,
IF RANGER MODEL YEAR IS 2024, MAKE SURE THAT LOAD BOX REINFOREMENT BRACKETS HAVE BEEN INSTALLED. SCAN QR CODE FOR DOCUMENTED DIRECTION

STEP 9C - INSTALL FOAM, (6) SPACER & 73740 SEALANT TO TRUCK CAB AND BED SEAMS (NOTE: FOR FORD RANGER ONLY)

STEP 9C.4
SLIDE 80670 & 80671 UNDER TRIM AT FRONT CORNERS OF BED TO MOUNT TO OEM HOLES, FULLY TIGHTEN (6)FAS0329, (6)FAS0552, & (6)FAS0588

M8 SOCKET DRILL

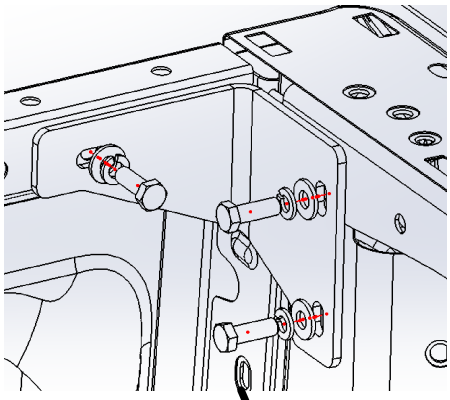

NOTE:
TRIM IS NOT VISIBLE FOR CLARITY

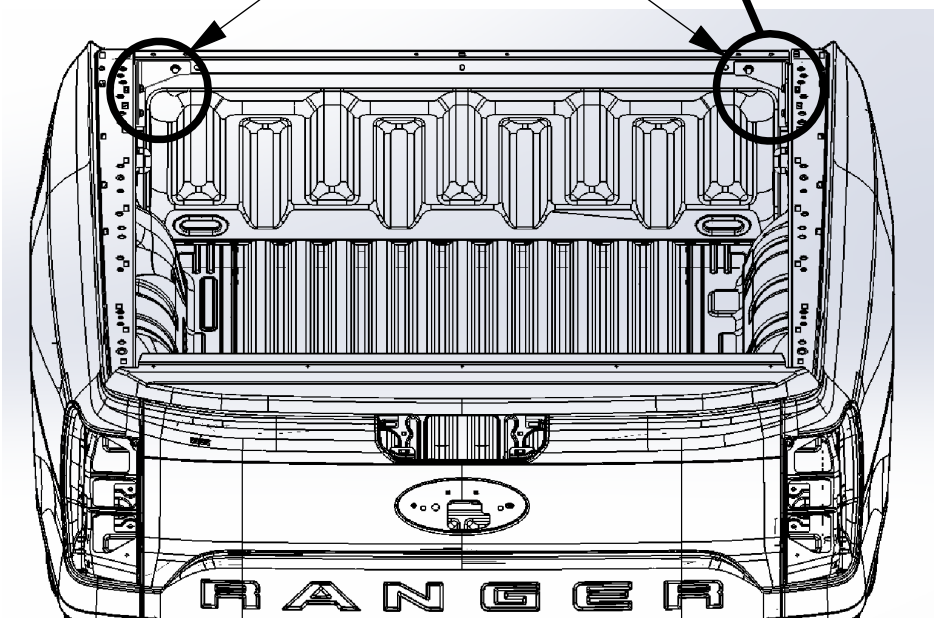

NOTE:
BEFORE INSTALL PREP IS STARTED, IF RANGER MODEL YEAR IS 2024, MAKE SURE THAT LOAD BOX REINFOREMENT BRACKETS HAVE BEEN INSTALLED. SCAN QR CODE FOR DOCUMENTED DIRECTION

STEP 10 - ATTACH TOPPER TO TRUCK BED

NOTE: (FOR 8.0' 26" TALL RAM 1500, 2500, 3500 ONLY) TOPPER MUST BE SOFT INSTALLED TO MARK FOR DRILLING. TOPPER TO BE REMOVED PRIOR TO DRILLING.

Step 10.1
SET TOPPER ONTO TRUCK BED. ALIGNMENT IS BASED OFF OF THE TAILGATE CLEARANCE CUTOUT IN THE SIDE BED RAILS (FOR FORD ONLY) AND PLACE ON THE PREVIOUSLY INSTALLED FRONT BED SEAL STEP 8.1

THESE 2 FACES SHOULD BE ALIGNED.

NOTE: IT IS RECOMMENDED THAT YOU LOAD THE TOPPER ONTO A TRUCKBED WITH ONE OF THE FOLLOWING METHODS:

-HOIST: ATTACH TO THE ROOF RAILS OF THE TOPPER
-FORKLIFT: OPEN THE REAR DOOR AND SET FORKS ON THE ROOF BOWS
-MANUAL: HAVE 1 INDIVIDUAL AT EACH CORNER OF THE TOP AND CARRY OVER THE SIDES OF THE TRUCK. DO NOT SCRATCH THE VEHICLE.

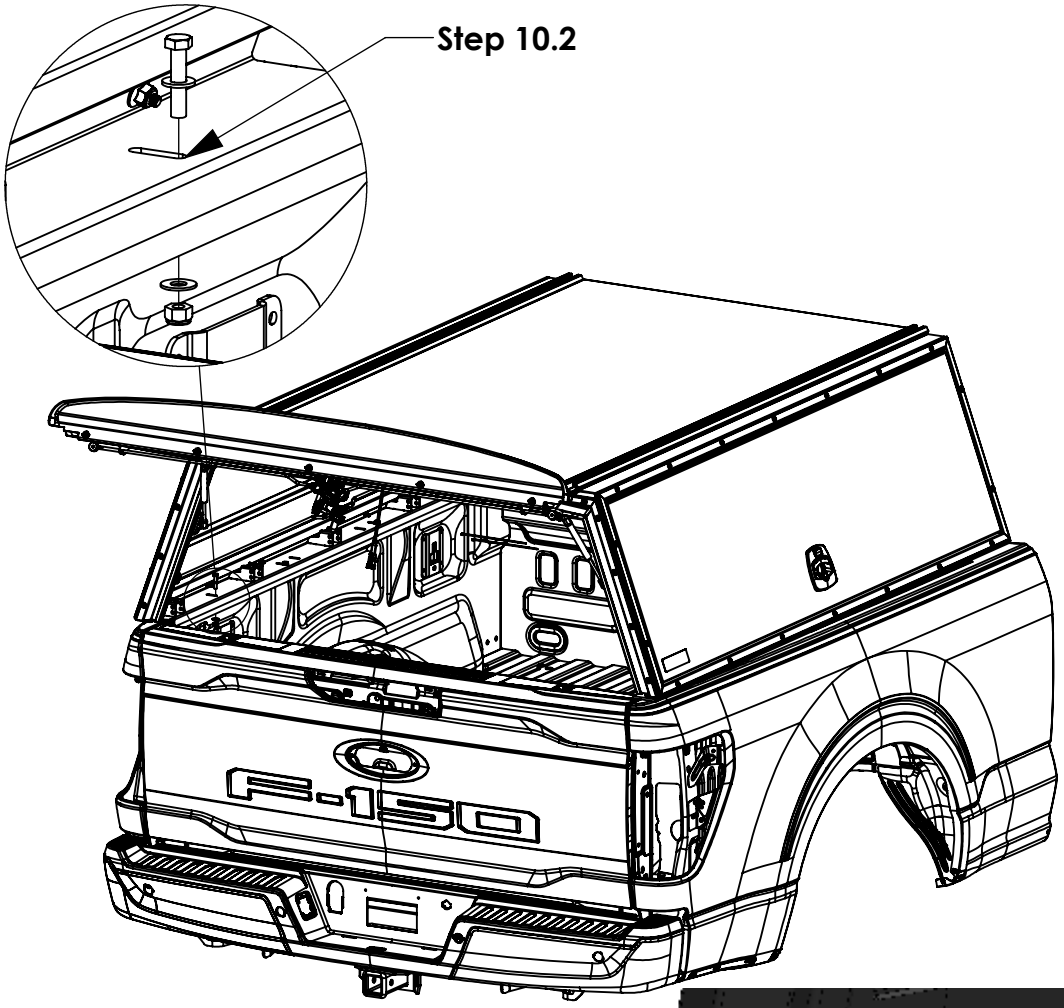

Step 10.2
USE HOLES IN THE BED RAIL TO MARK AND DRILL MOUNTING LOCATIONS. IT IS NOT NECESSARY TO REMOVE THE TOPPER FOR THIS STEP.

(8 PLACES)
11/32" DRILL BIT

NOTE: IF THESE HOLES INTERFERE WITH THE OEM BODY, DRILL A NEW HOLE IN THE BED RAIL +/- 2" FROM THE INTERFERENCE.

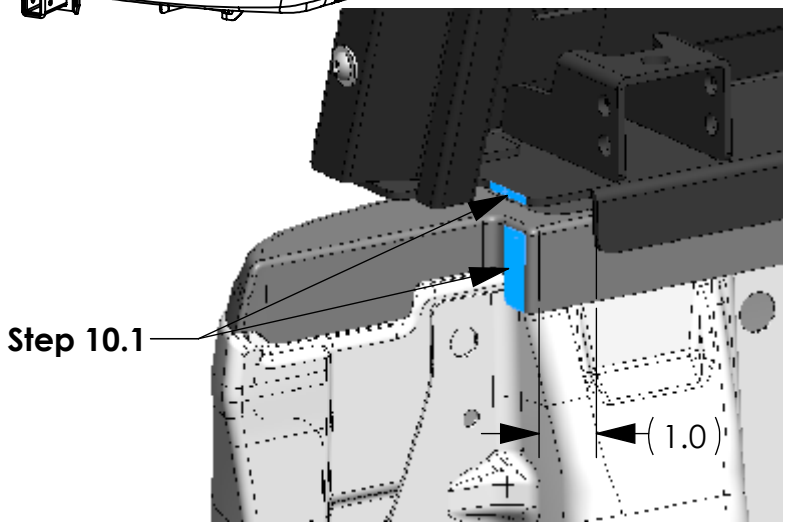

STEP 10 ALT- ATTACH TOPPER TO TRUCK BED

STOP NOTE: (FOR 5.0' FORD RANGER ONLY) TOPPER MUST BE SOFT INSTALLED TO MARK FOR DRILLING. TOPPER TO BE REMOVED PRIOR TO DRILLING.

Step 10.1 ALT
SET TOPPER ONTO TRUCK BED. ALIGNMENT IS BASED OFF OF THE TAILGATE CLEARANCE CUTOUT IN THE SIDE BED RAILS (FOR FORD ONLY) AND PLACE ON THE PREVIOUSLY INSTALLED FRONT BED SEAL STEP 8.1

THESE 2 FACES SHOULD BE ALIGNED.

NOTE: IT IS RECOMMENDED THAT YOU LOAD THE TOPPER ONTO A TRUCKBED WITH ONE OF THE FOLLOWING METHODS:

-HOIST: ATTACH TO THE ROOF RAILS OF THE TOPPER
-FORKLIFT: OPEN THE REAR DOOR AND SET FORKS ON THE ROOF BOWS
-MANUAL: HAVE 1 INDIVIDUAL AT EACH CORNER OF THE TOP AND CARRY OVER THE SIDES OF THE TRUCK. DO NOT SCRATCH THE VEHICLE.

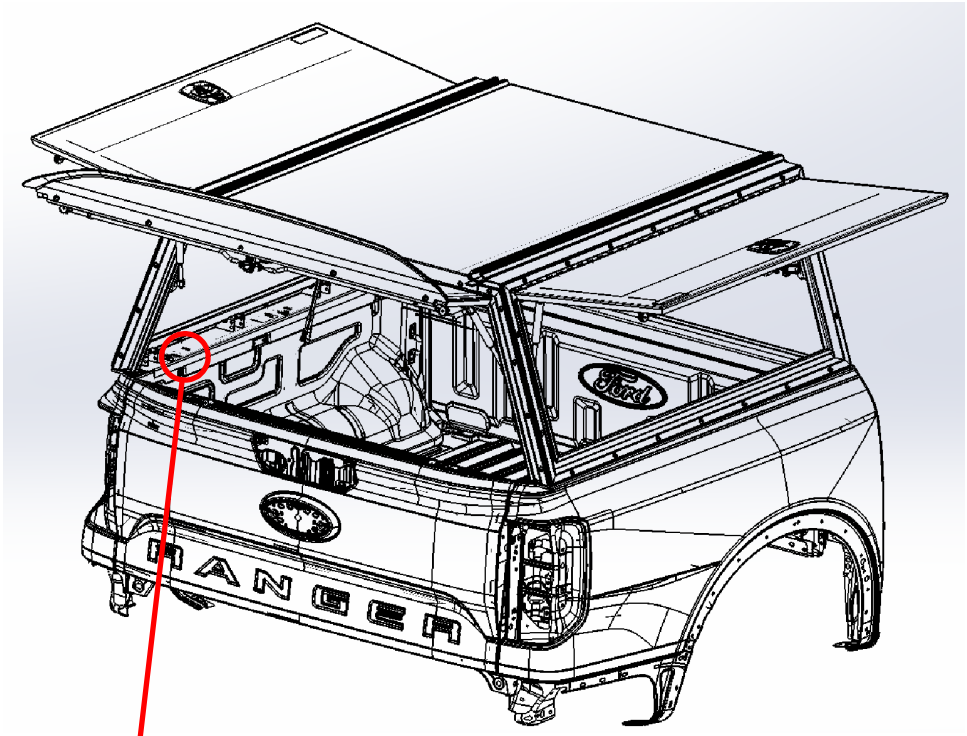

Step 10.2 ALT
USE HOLES IN THE BED RAIL TO MARK AND DRILL MOUNTING LOCATIONS. IT IS NOT NECESSARY TO REMOVE THE TOPPER FOR THIS STEP.

(8 PLACES)
11/32" DRILL BIT

STOP

NOTE: IF THESE HOLES INTERFERE WITH THE OEM BODY, DRILL A NEW HOLE IN THE BED RAIL +/- 2" FROM THE INTERFERENCE.

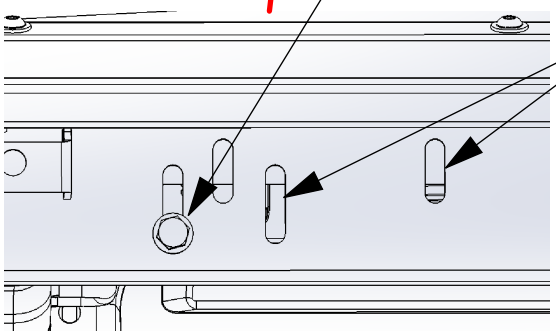

NOTE:
OUTER SLOTS ARE TO BE USED WITH 2026 FORD RANGER INNER AND SMALLER SLOTS TO BE USED WITH 2025 FORD RANGER

NOTE:
OVERHEAD VIEW FOR CLARITY

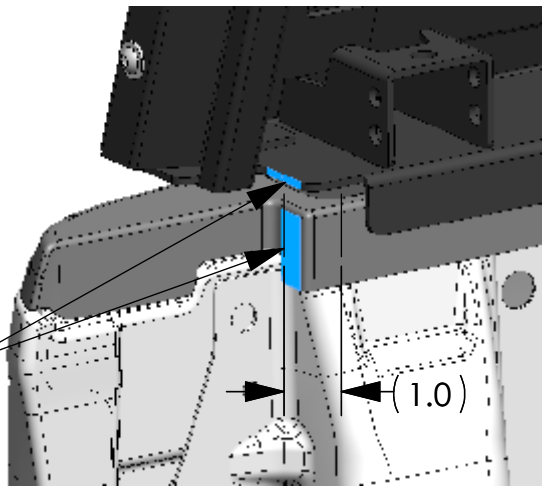

STEP 10 - ATTACH TOPPER TO TRUCK BED

NOTE: (FOR 8.0' 26" TALL RAM 1500, 2500, 3500 ONLY) TOPPER MUST BE SOFT INSTALLED TO MARK FOR DRILLING. TOPPER TO BE REMOVED PRIOR TO DRILLING.

Step 10.3
USING THE HOLES YOU JUST DRILLED OUT, FASTEN THE TOPPER TO THE TRUCK BED.
FAS0242,
FAS0552 [x2],
FAS0248

(8 PLACES)
1/2" SOCKET
1/2" WRENCH

Step 10.4
ADD TO BOTH SIDES SILICONE BETWEEN FRONT PANEL GAP AND BED RAIL, AND REAR OF TOPPER.

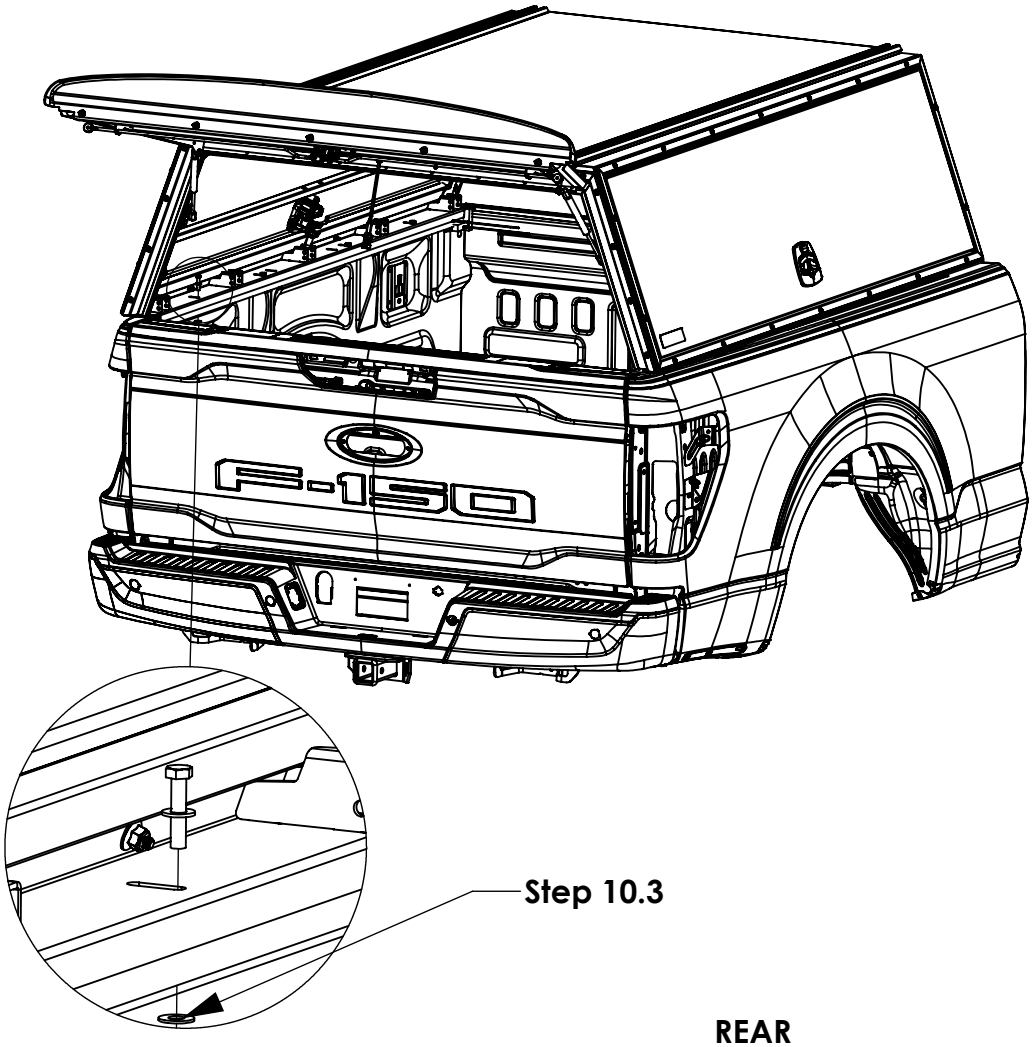

FRONT

Step 10.4

REAR

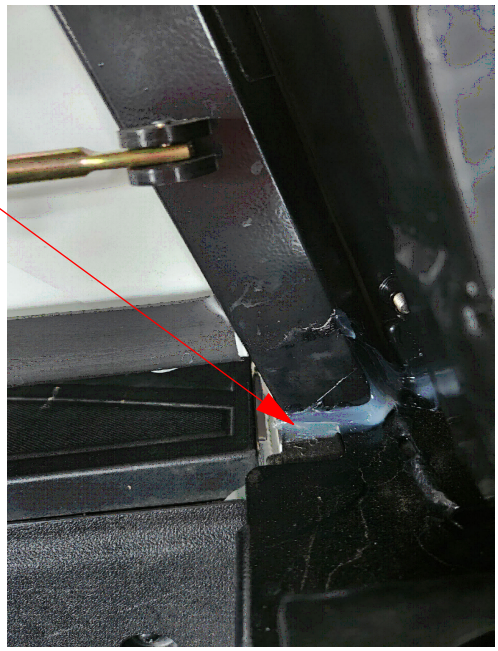

MAKE SURE ALL FASTENERS ARE TIGHTENED!! INSTALLATION IS COMPLETE

STEP 10 (CON'T) - ATTACH TOPPER TO TRUCK BED

NOTE: THIS STEP IS FOR COLORADO TOPS ONLY

Step 10.4B
ONCE TOPPER IS BOLTED TO BED RAILS, APPLY SILICONE (26618-0) TO LOWER INSIDE CORNERS OF THE TOPPER CLOSEST TO THE CAB, SEALING THE GAP TO THE BED RAIL.

NOTE: IMAGES SHOW BLACK SEALENT, SILICONE PROVIDED WILL BE CLEAR.

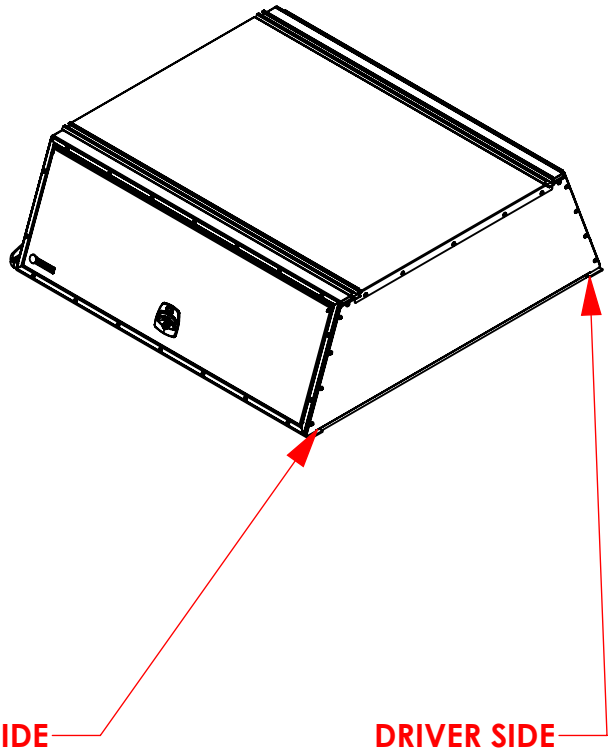

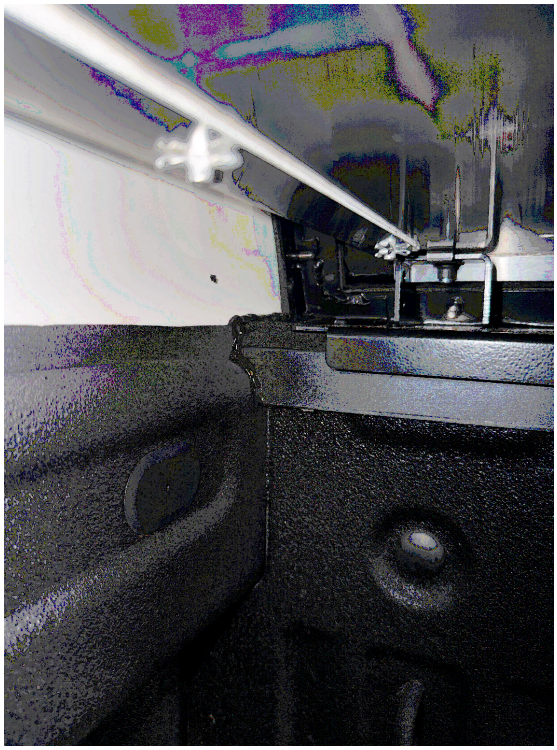

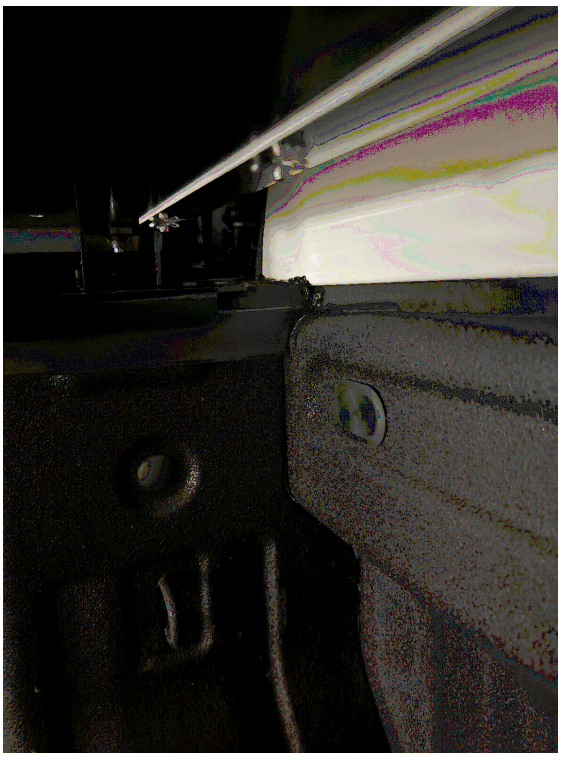

MAKE SURE ALL FASTENERS ARE TIGHTENED!! INSTALLATION IS COMPLETE

STEP 10 (CON'T) - ATTACH TOPPER TO TRUCK BED

NOTE: (FOR 8.0' 26" TALL RAM 1500, 2500, 3500 ONLY) TOPPER MUST BE SOFT INSTALLED TO MARK FOR DRILLING. TOPPER TO BE REMOVED PRIOR TO DRILLING.

Step 10.4
COLORADO TOPPER. ALIGNMENT IS BASED OFF OF THE TAILGATE AND THE SIDE BED RAILS.

THESE 2 FACES SHOULD BE ALIGNED.

NOTE: IT IS RECOMMENDED THAT YOU LOAD THE TOPPER ONTO A TRUCKBED WITH ONE OF THE FOLLOWING METHODS:

-HOIST: ATTACH TO THE ROOF RAILS OF THE TOPPER
-FORKLIFT: OPEN THE REAR DOOR AND SET FORKS ON THE ROOF BOWS
-MANUAL: HAVE 1 INDIVIDUAL AT EACH CORNER OF THE TOP AND CARRY OVER THE SIDES OF THE TRUCK. DO NOT SCRATCH THE VEHICLE.

Step 10.5
USING THE HOLES YOU JUST DRILLED OUT, FASTEN THE TOPPER TO THE TRUCK BED.
FAS0242, FAS0552 [x2], FAS0248

(6 PLACES)
1/2" SOCKET
1/2" WRENCH

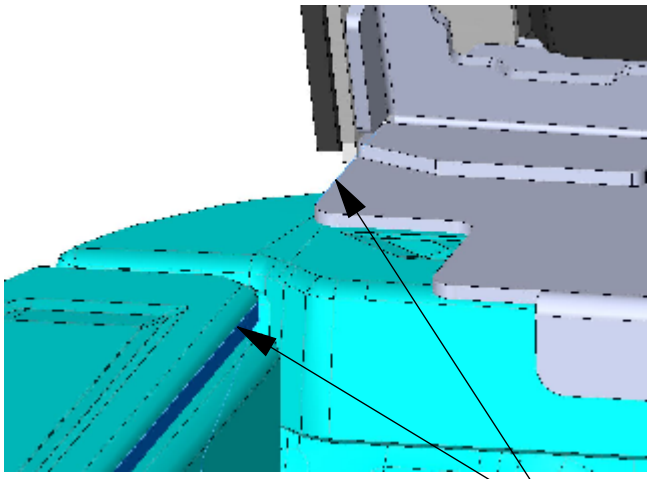

Step 10.4 IN LINE

STEP 10.5 INSIDE SLOTS FOR THE COLORADO

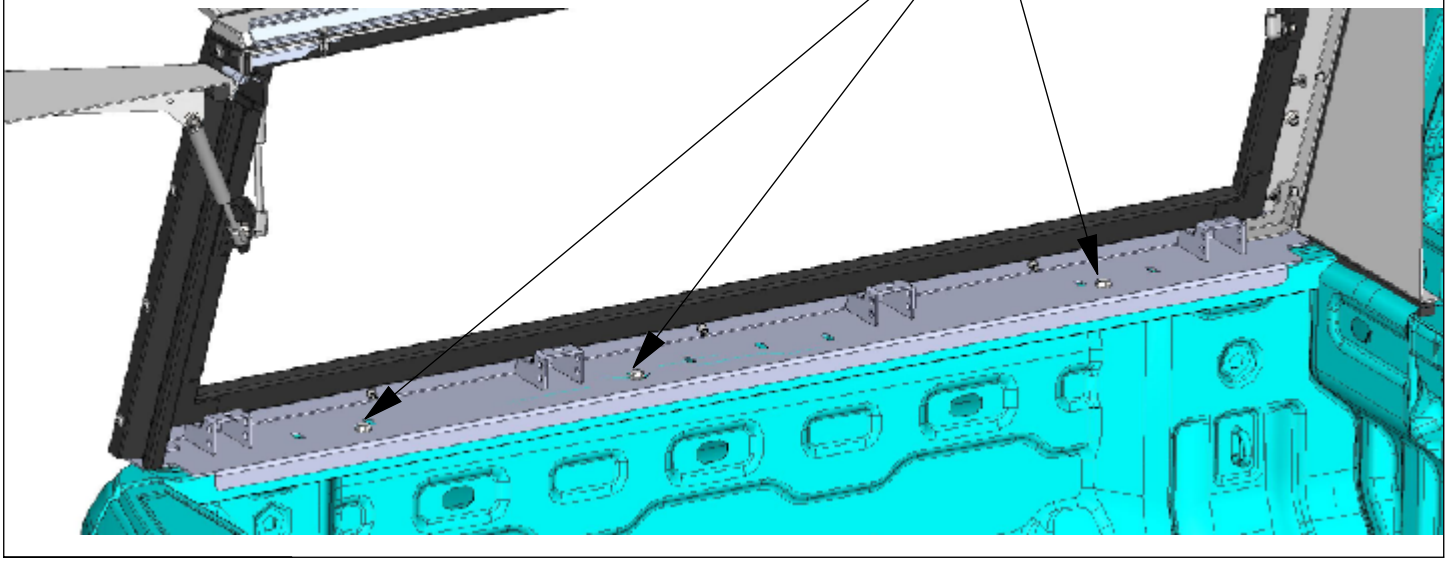

MAKE SURE ALL FASTENERS ARE TIGHTENED!! INSTALLATION IS COMPLETE

Introduction / Comments:

Install Instructions For Brake Light On Topper For Silverado

Note:

Read all instructions prior to installation. Review the Adrian Steel **GENERAL PRECAUTIONS PAGES (56638**) before attempting installation. Only personnel familiar with using electrical best practices should perform this install. Reference **ELECTRICAL BEST PRACTICES MANUAL (54479)** before attempting installation.

Installation Instructions For Brake Light On Topper For Silverado 1500 / 2500 / 3500

Routing Overview

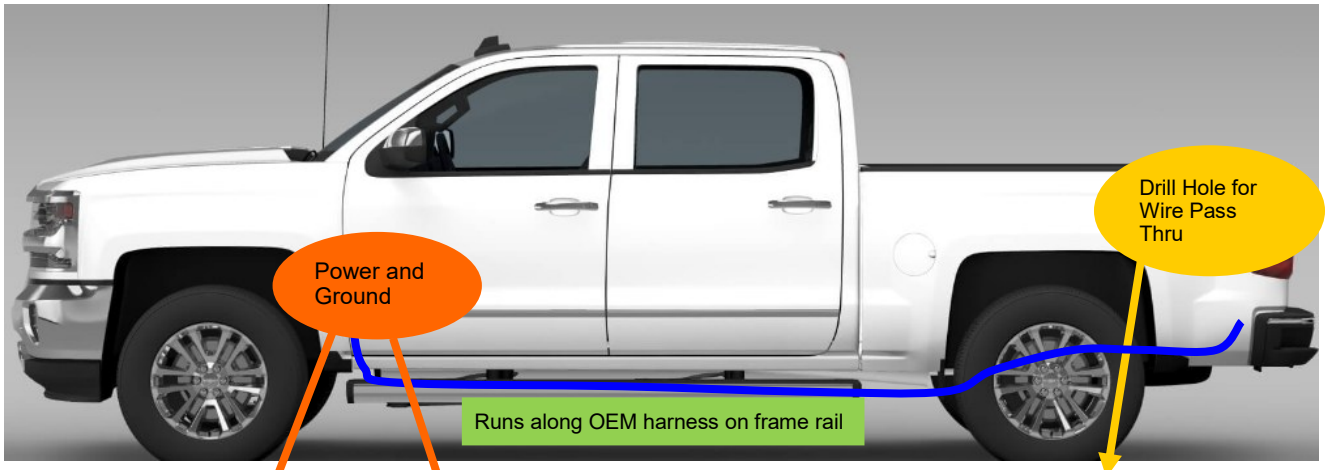

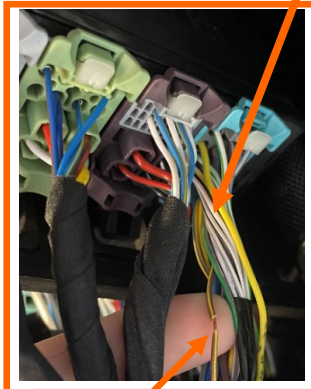

CHMSL Circuit OEM Wire. Brown/Yellow Wire

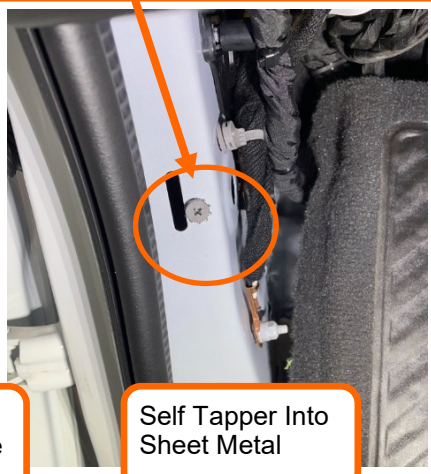

Self Tapper Into Sheet Metal

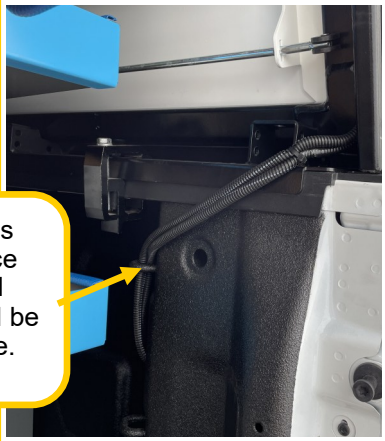

Note: This is for reference only. Actual location will be driver's side.

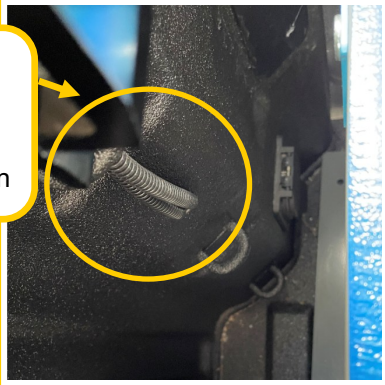

View from passenger side topper door—looking down

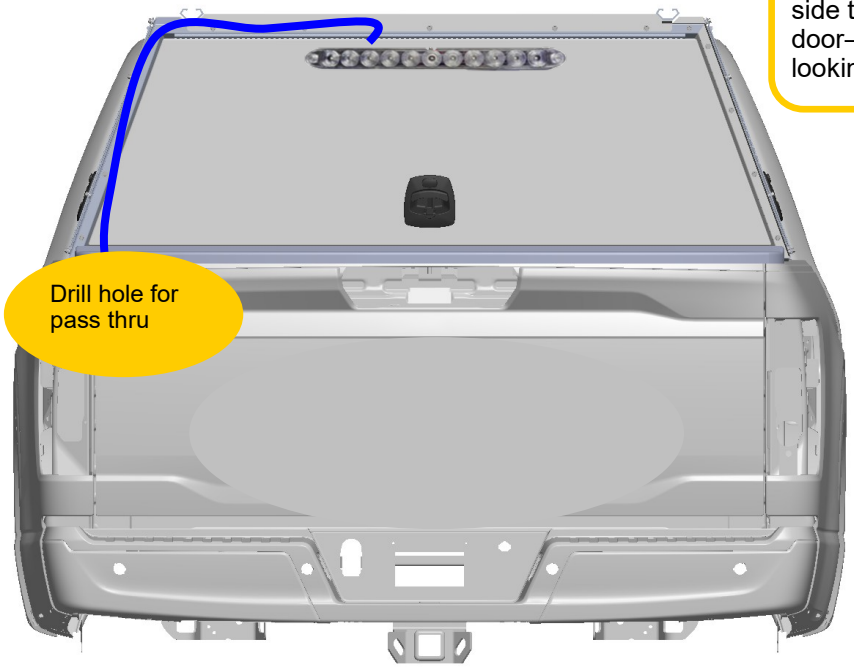

Color	Key - Items
Orange	Power and Ground Location
Blue	Harness Routing
Yellow	Bed Wire Pass Thru

Step 1: Locate the brake light harness 71680.

Remove the fuse from the inline fuse holder until he end of the install.

Open the driver's side door. Remove the trim panels circled in red.

Step 2:
Locate the body control module on the lefthand side of the vehicle body, behind the OBDII port. There will be 5 colorful connectors with wire harnesses plugged into the bottom of the module.

For 2023 and 2024 Silverado 1500 and for the 2024 ONLY Silverado HD Series:

Locate the light blue connector (X5), pin 25. This wire will be Yellow/Brown. This is the OEM CHMSL circuit wire for the brake light. Use a meter to be sure this is the correct wire (OEM's tend to change wire colors).

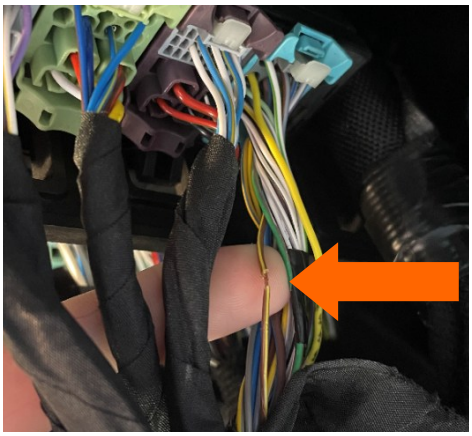

For 2023 Silverado HD Series:

Locate the black connector (X4), pin 11. This wire will be Violet/White. This is the OEM CHMSL circuit wire for the brake light. **Use a meter to be sure this is the correct wire (OEM's tend to change wire colors).**

Separate the wire from the bundle (by your finger or a trim tool) to prepare it to be connected with the brake light harness.

Locate the posi-tap in the brake light harness bag.

The red wire in the pictures is referencing the brake light harness.
The purple wire in the picture is referencing the OEM brake light signal wire.

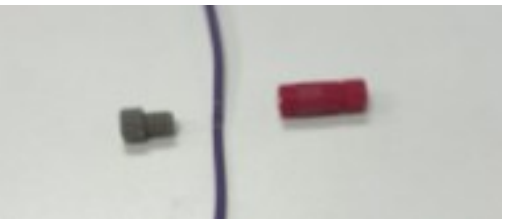

Step 3: Remove the grey cap on the posi-tap.

Push the OEM brake signal wire into the insert on the grey cap.

Twist the grey cap back onto the posi -tap with the OEM wire secured. The pin point on the posi-tap will puncture the OEM wire and obtain the signal.

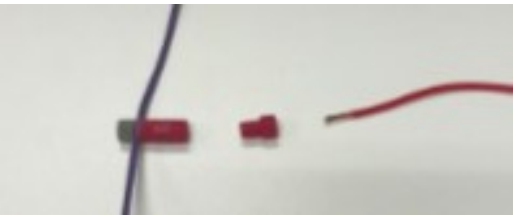

Remove the red cap on the posi-tap.

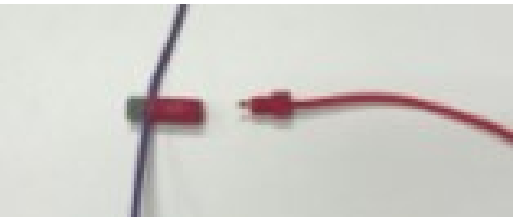

Insert the blunt cut end of the brake light harness through the red cap.

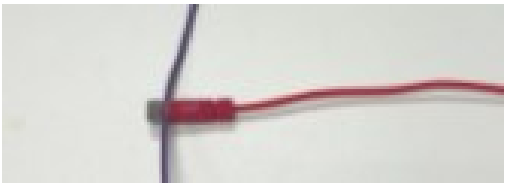

Twist the cap back onto the posi-tap with the brake light harness secured.

The picture to the left is the actual installed posi-tap onto the OEM wire.

Be sure the connection is secure.

Step 4: On the driver's side: locate the cut outs for the trim panels in the sheet metal near the OEM chassis ground. This is located to the left of the OBDII port on the vehicle body.

Locate the cut out that is higher on the frame than the OEM ground, shown in the picture to the left.

Locate the fastener bag BAG71800 and find the small tek screw and the star washer.

Insert the ring terminal through the star washer then through the ground ring terminal on the brake light harness.

Screw the tek screw into the frame like shown in the picture to the left.

Be sure not to over tighten or under tighten the screw. Be sure there is a good connection by checking the connectivity of the ground with a multimeter. You can do this seeing if there is a resistance (Setting "Ω" on meter) between the OEM copper ground and the new ring terminal.

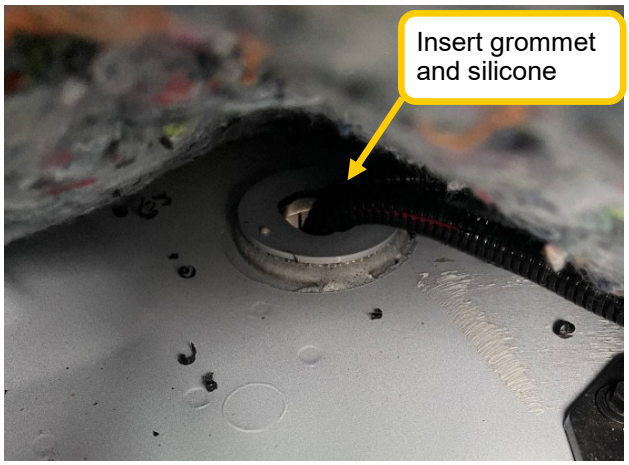

Step 4: Locate the OEM floor grommet by lifting up the carpet on the driver's side.

If installing the interior lighting kit as well as the brake light kit, utilize the larger grommet supplied in the brake light harness bag.

If only installing the brake light harness, utilize the smaller grommet supplied in the brake light harness kit.

Drill (for larger grommet a 1" hole and 0.625" (5/8) hole for the smaller grommet) then route the wire harness through the grommet, to the underbody of the truck.

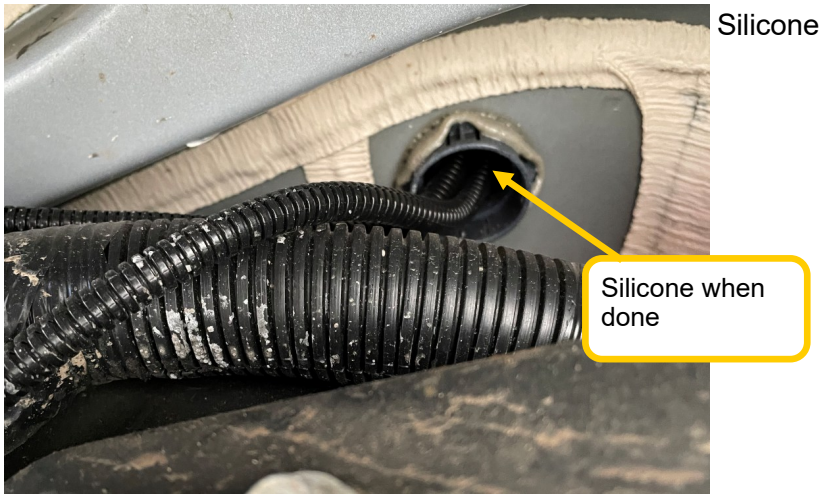

Silicone when done.

Excess Wire Under Body. Use the provided tek screw and p-clip to secure wiring to the frame

Step 5: Routing (Refer to routing diagrams at the beginning of the instructions)

Route the brake light harness rearward following the OEM wire harness on the frame. Continue routing the harness rearward until you reach the bumper.

Continue routing the harness upward in the bed cavity, to the bed wire pass thru area.

Drill a hole above the 2 rings on the passenger side of the bed. Be sure the area is clear for a pass thru before drilling.

Tuck any excess wiring into the empty cavity underneath the bed frame. Bundle the excess wire in the cavity using zip ties. Use the tek screw and p-clip to secure the bundle to the frame.

Secure the wiring with zip ties.

DO NOT secure wiring to any brake lines.

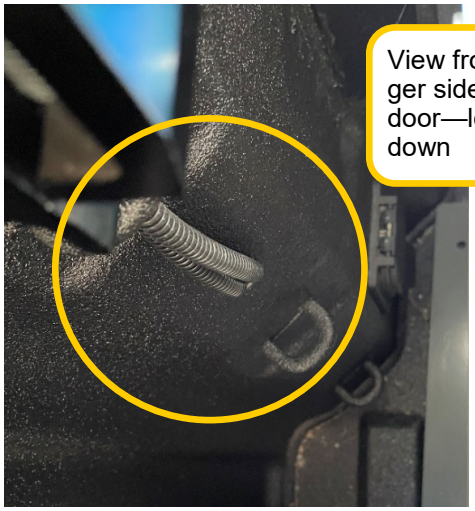

View from passenger side topper door—looking down

Note: This is for reference only. Actual location will be driver's side.

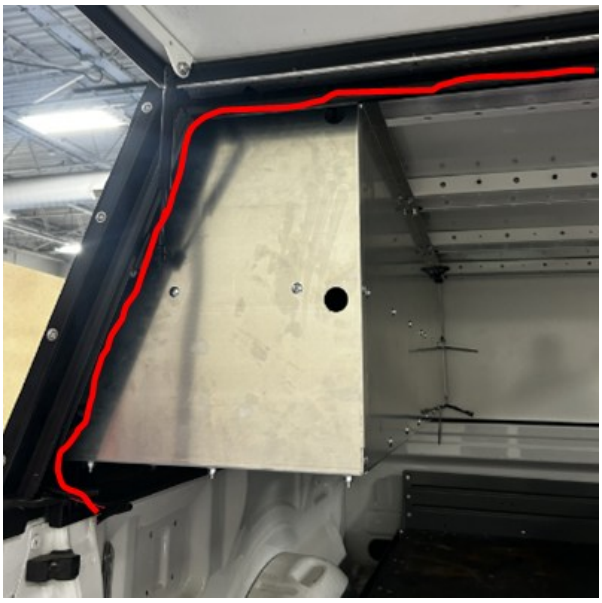

Step 6: Routing continued
Continue routing the brake light harness inside the topper, to the light.

The harness should run along the driver's side rear cavity, then across the top cavity to the light (Red and blue lines shown in pictures.

Be sure to leave extra wire from the brake light to the topper rails before securing. This ensures the wires wont brake when the topper door opens and closes.

Secure harness using stud mount zip ties.

Connect the harness to the light:
Plug the connectors together. Pull connectors lightly to ensure they do not come apart.

Be sure the red wire on the harness connects to the black wire on the light. Then the black wire on the harness connects to the white wire on the light.

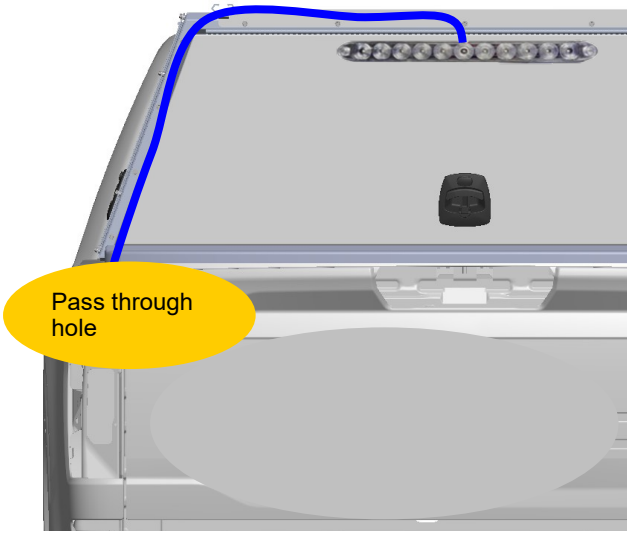

Insert the fuse into the inline-fuse holder on the brake light harness.

The install is now complete.

Check that the brake light comes on when the brake pedal is pushed, then back off once pedal is released.