ADRIAN STEEL
Cargo Management Solutions for Commercial Vehicles

# *ALUM. TOPPER, W/ SIDE DOORS AND HINGED REAR DOOR*

*PRODUCT WEIGHT*

**200 LBS**

*WIDTH X DEPTH X HEIGHT*

**70" X 23.9" X 86.1"**

*CAPACITY*

**400# ROOF CAPACITY**

*COLOR*

**WHITE PANELS**
**BLACK TRIM**

*CATALOG NUMBER*

**TFKFDT178HM23W**

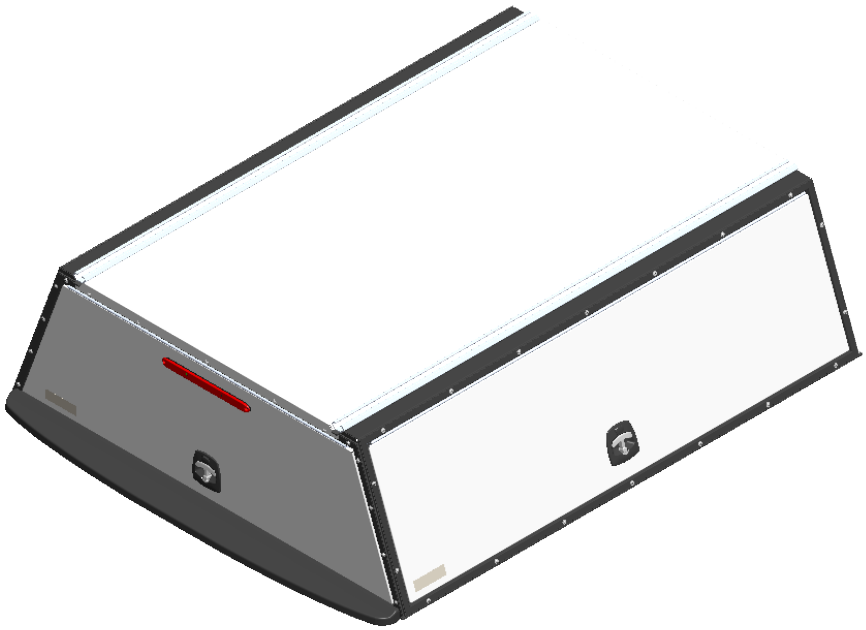

## PRODUCT FEATURES

***THIS IS ADRIAN STEEL'S STANDARD ALUMINUM TOPPER FOR 6.5' BED F-150 PICKUPS. PLEASE NOTE THAT THIS IS DESIGNED TO FIT THE 2022 TO CURRENT YEAR M.Y. PICKUP BEDS.***

***TOPPER ROOF RAIL IS STANDARD, ALLOWING FOR HD-UTILITY, GRIP LOCK AND PROLIFT LADDER RACKS TO BE MOUNTED TO THE ROOF. MORE OPTIONS TO COME.***

***SIDE DOOR TOOLBOX MOUNTING IS AN OPTIONAL ACCESSORY FOR THIS KIT.***

***KIT INCLUDES MOUNTING HARDWARE, VEHICLE SPECIFIC TAILGATE COVER AND OEM SPECIFIC 3rd BRAKE LIGHT HARNESS. ALL 3 HANDLES WILL BE KEYED ALIKE.***

***TOPPER PANELS ARE 0.080 SHEET ALUMINUM, WITH MOST STRUCTURAL COMPONENTS CONSISITING OF 0.125 SHEET & EXTRUDED ALUMINUM.***

**SEE PAGES 2-4 FOR OTHER PRODUCTS THAT WORK WITH THIS UNIT.**

ADRIAN STEEL
Cargo Management Solutions for Commercial Vehicles

## ALUM. TOPPER, W/ SIDE DOORS AND HINGED REAR DOOR

CATALOG NUMBER **TFKFDT178HM23W**

*TOOLBOX ACCESSORIES THAT WILL WORK WITH THIS PRODUCT.*

*THE FIRST SET OF PARTS IS INDIVIDUALLY BOXED COMPONENTS.*
*THE SECOND SET CONTAINS COMPLETE SOLUTIONS KITS (i.e. LEVEL 8'S).*

*WHEN TOOLBOXES ARE PRESENT ON BOTH SIDES,*
*THE "AISLE" BETWEEN IS APPROX. 31".*

| CATALOG NUMBER | DESCRIPTION (smart) |
|---|---|
| **INTERIOR TOOLBOX COMPONENTS** | |
| TTBBK177520 | TBOX, BODY KIT, 177520 |
| TTBSDK1720 | TBOX, SPL DIV KIT, 1720 |
| TTBSK1737 | TBOX, SHELF KIT, 1737 |
| TTBSK1775 | TBOX, SHELF KIT, 1775 |
| TTBTDK1720 | TBOX, TALL DIV KIT, 1720 |
| | |
| **INTERIOR TOOLBOX CONFIGURATIONS (REFER TO WEBSITE)** | |
| TTB177520C01 | TBOX CONFIG, 01 |
| TTB177520C02 | TBOX CONFIG, 02 |
| TTB177520C03 | TBOX CONFIG, 03 |
| TTB177520C04 | TBOX CONFIG, 04 |
| TTB177520C05 | TBOX CONFIG, 05 |
| TTB177520C06 | TBOX CONFIG, 06 |
| TTB177520C07 | TBOX CONFIG, 07 |
| TTB177520C08 | TBOX CONFIG, 08 |
| TTB177520C09 | TBOX CONFIG, 09 |
| TTB177520C10 | TBOX CONFIG, 10 |
| TTB177520C11 | TBOX CONFIG, 11 |

**The information contained in this document is the sole property of ADRIAN STEEL COMPANY. ADRIAN STEEL COMPANY retains the right to modify and/or change the product of its design at any time with prior notification.**

ADRIAN STEEL
Cargo Management Solutions for Commercial Vehicles

# ALUM. TOPPER, W/ SIDE DOORS AND HINGED REAR DOOR

CATALOG NUMBER **TFKFDT178HM23W**

## LADDER RACK ACCESSORIES THAT WILL WORK WITH THIS PRODUCT.

THE FIRST SET OF PARTS IS INDIVIDUALLY BOXED COMPONENTS.
THE SECOND SET CONTAINS COMPLETE SOLUTIONS KITS (i.e. LEVEL 8'S).

| CATALOG NUMBER | DESCRIPTION (smart) |
|---|---|
| **LADDER RACK COMPONENTS** | |
| URMBK4W | UTILTY,MNT BKT KT,RAIL,4W |
| 2BARTOPW | 2BAR UTILITY RACK, TOP, W |
| PLSDPSLT5W | PROLIFT,STD,PS,LOW T,5,W |
| PLSDDSLT5W | PROLIFT,STD,DS,LOW T,5,W |
| PLMDPSLT5W | PROLIFT,MAX,PS,LOW T,5,W |
| PLMDDSLT5W | PROLIFT,MAX,DS,LOW T,5,W |
| PLMDPSMT5W | PROLIFT,MAX,PS,MID T,5,W |
| PLMDDSMT5W | PROLIFT,MAX,DS,MID T,5,W |
| GL-CVPS | GRIP LOCK,COMPACT VAN,PS |
| GL-CVDS | GRIP LOCK,COMPACT VAN,DS |
| **LADDER RACK KITS** | |
| PLS61LT5 | PROLIFT SGL STD DR 5' TOP |
| PLS63LT5 | PROLIFT DBL STD DR 5' TOP |
| PLS64LT5 | PROLIFT CMB STD DR 5' TOP |
| PLS65LT5 | PROLIFT-UT CMB SDR 5' TOP |
| GL61LT5 | SGL GL,6'2"-6'10" TOP |
| GL63LT5 | DUAL GL,6'2"-6'10" TOPPER |
| 2B6TOPW | 2-BAR UTY RK TOP 6" UPRT |
| PLM61LT5 | PROLFT SGL SIDE MAX 5' |
| PLM63LT5 | PROLFT DUAL SIDE MAX 5' |

**The information contained in this document is the sole property of ADRIAN STEEL COMPANY. ADRIAN STEEL COMPANY retains the right to modify and/or change the product of its design at any time with prior notification.**

ADRIAN STEEL
Cargo Management Solutions for Commercial Vehicles

## *ALUM. TOPPER, W/ SIDE DOORS AND HINGED REAR DOOR*

*CATALOG NUMBER* **TFKFDT178HM23W**

### *ELECTRICAL ACCESSORIES THAT WILL WORK WITH THIS PRODUCT*

| ***CATALOG NUMBER*** | ***DESCRIPTION (smart)*** |
|---|---|
| ***LIGHITNG KITS*** | |
| 72548 | COMPLETE PLUG & PLAY LIGHTING KIT: 2 DOME, 3 STRIP |
| 72607 | COMPLETE PLUG & PLAY KIT: 3 STRIP LIGHTS |
| 72604 | PLUG & PLAY STRIP LIGHT KIT: 1 REAR DOOR |
| 72606 | PLUG & PLAY STRIP LIGHT KIT: 1 DRIVER DOOR |
| 72605 | PLUG & PLAY STRIP LIGHT KIT: 1 PASSENGER DOOR |
| ***E-LOCK KITS*** | |
| TELH05 | E-LOCK CREW,PASS,6.75 [USE WITH CREW CAB] |
| TELH09 | E-LOCK REG,PASS,6.75 [USE WITH REGULAR CAB] |

**The information contained in this document is the sole property of ADRIAN STEEL COMPANY. ADRIAN STEEL COMPANY retains the right to modify and/or change the product of its design at any time with prior notification.**

| INSTR. NUMBER : 71622 | PG: 1 | REV: W |
|---|---|---|
| PART NUMBER : TFK__T178HM23W | | |
| PART DESC. : ASM INS, TFK__T178HM23W | | |

**NOTE: THESE INSTRUCTIONS ARE VALID FOR ALL TFK FULL TOPPER KITS. A FEW BOM KITS ARE SHOWN FOR REFERENCE ONLY.**

**INSTRUCTIONS SHOWS F-150 BODY DURING INSTALLATION**

**FASTENER AND HOLE COUNTS MAY BE DIFFERENT BETWEEN TOPPER KITS.**

**E-LOCK VERSIONS:**
**SWAP M WITH E IN PART NUMBER**
**EXAMPLE: TFKFDT178HM23W BECOMES TFKFDT178HE23W**

**BOM FOR 6.5' F-150**

| ITEM NO. | PART NUMBER | DESCRIPTION | QTY. |
|---|---|---|---|
| 1 | TSK78M23W | TOP, SIDE KIT,78",M,23,W | 2 |
| 2 | TCK78HM23W | TOP,CLOSE KIT,78",HM23,W | 1 |
| 3 | TRK7823W | TOP, ROOF KIT,78",23,W | 1 |
| 4 | THKFDT178M23 | HDW KIT, TFKFDT178HM23W | 1 |
| 5 | TMLHK | Topper Mechanical Lock Hatch Kit | 1 |

*** E-LOCK VERSION SWAP TMLHK WITH TELH05**

**BOM FOR 6.5' SILVERADO 1500**

| ITEM NO. | PART NUMBER | DESCRIPTION | QTY. |
|---|---|---|---|
| 1 | TSK78M23W | TOP, SIDE KIT,78",M,23,W | 2 |
| 2 | TCK78HM23W | TOP,CLOSE KIT,78",HM23,W | 1 |
| 3 | TRK7823W | TOP, ROOF KIT,78",23,W | 1 |
| 4 | THKGMT178M23 | HDW KIT, TFKGMT178HM23W | 1 |
| 5 | TMLHK | Topper Mechanical Lock Hatch Kit | 1 |
| 19 | 81552-W | INTERIOR, LGT MAG BRKT, WHITE | 1 |

*** E-LOCK VERSION SWAP TMLHK WITH TELH02**

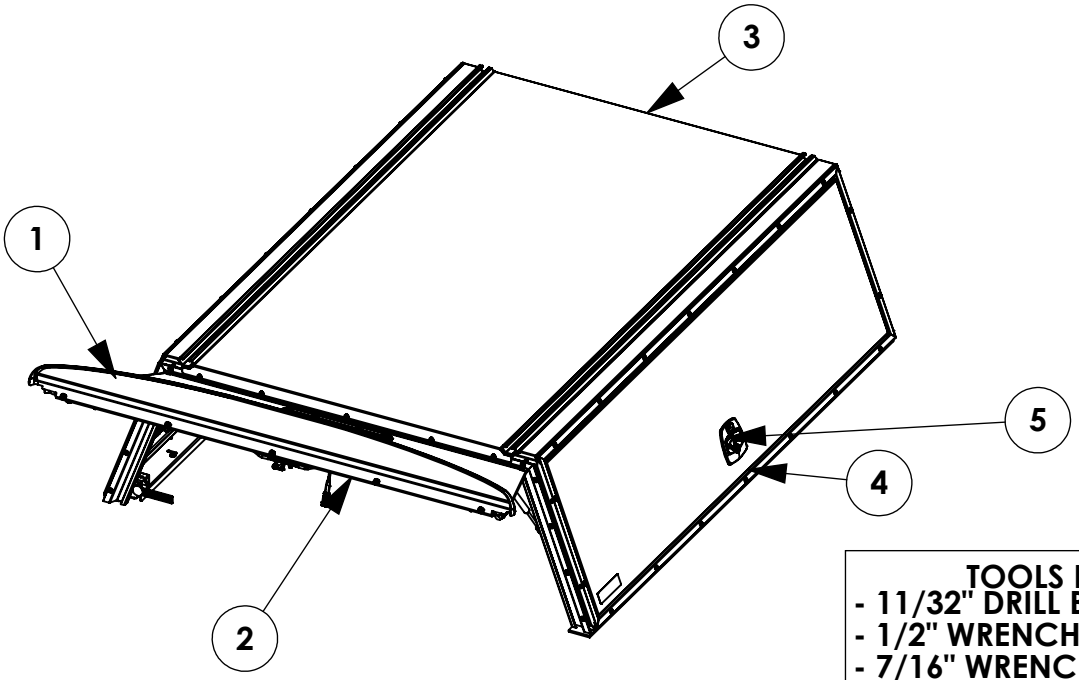


**TOOLS NEEDED:**
- **11/32" DRILL BIT**
- **1/2" WRENCH & SOCKET**
- **7/16" WRENCH**
- **M10 SOCKET**
- **M8 SOCKET**
- **M4 ALLEN**
- **3/16" ALLEN**
- **5/32" ALLEN**
- **DRIVE RATCHET / IMPACT**
- **SCISSORS**
- **TAPE MEASURE**
- **ALIGNMENT PUNCH**
- **1/4" RIVET TIP**

| INSTR. NUMBER : 71622 | PG: 2 | REV: W |
|---|---|---|
| PART NUMBER : TFK__T178HM23W | | |
| PART DESC. : ASM INS, TFK__T178HM23W | | |

**E-LOCK VERSIONS:**
**SWAP M WITH E IN PART NUMBER**
**EXAMPLE: TFKFDT178HM23W**
**BECOMES TFKFDT178HE23W**

## BOM FOR 6.3' RAM

| ITEM NO. | PART NUMBER | DESCRIPTION | QTY. |
|---|---|---|---|
| 1 | TCK78HM23W | TOP,CLOSE KIT,78",HM23,W | 1 |
| 2 | THKRAM175M23 | HDW KIT, TCKRAMT175HM23W | 1 |
| 3 | TRK7523W | TOP, ROOF PANEL KIT, RAM | 1 |
| 4 | TSK75M23W | TOP, SIDE KIT, 78" RAM | 2 |
| 5 | TMLHK | Topper Mechanical Lock Hatch Kit | 1 |

*** E-LOCK VERSION SWAP TMLHK WITH TELH02**

## BOM FOR 5.7' RAM

| ITEM NO. | PART NUMBER | DESCRIPTION | QTY. |
|---|---|---|---|
| 1 | TSK66M23W | TOP, SIDE KIT,66",M,23,W | 2 |
| 2 | TCK78HM23W | TOP,CLOSE KIT,78",HM23,W | 1 |
| 3 | TRK6623W | TOP, ROOF KIT,66",23,W | 1 |
| 4 | THKRAM167M23 | HDW KIT, TFKRAM167HM23W | 1 |
| 5 | TMLHK | Topper Mechanical Lock Hatch Kit | 1 |

*** E-LOCK VERSION SWAP TMLHK WITH TELH01**

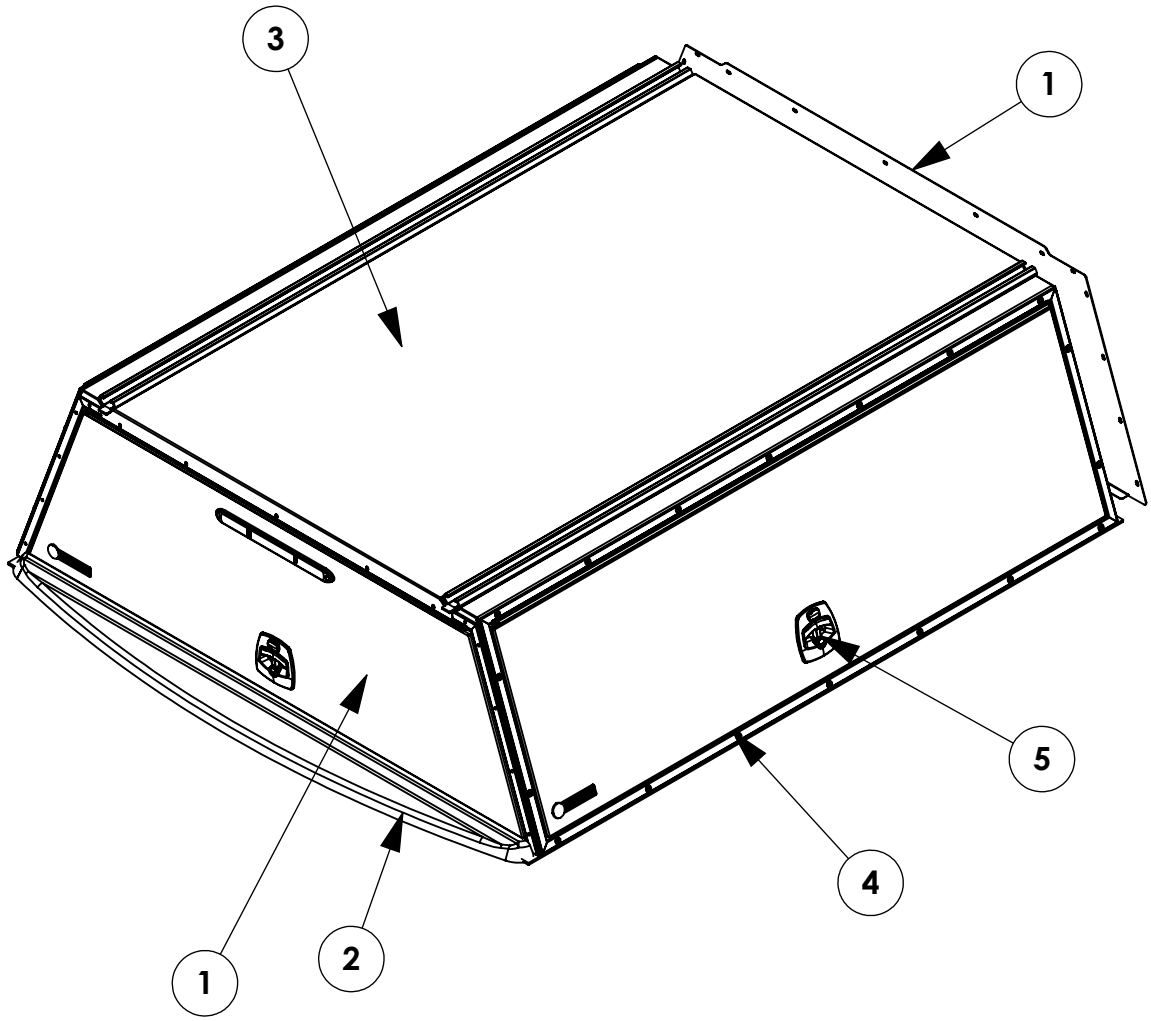

| INSTR. NUMBER : 71622 | PG: 3 | REV: W |
|---|---|---|
| PART NUMBER : TFK__T196HM23W | | |
| PART DESC. : ASM INS, TFK__T178HM23W | | |

**E-LOCK VERSIONS:**
**SWAP M WITH E IN PART NUMBER**
**EXAMPLE: TFKFDT178HM23W**
**BECOMES TFKFDT178HE23W**

**BOM FOR 8.0' 23" TALL FORD F-150, F-250, F-350**

| ITEM NO. | PART NUMBER | DESCRIPTION | QTY. |
|---|---|---|---|
| 1 | TSK96M23W | TOP, SIDE KIT,96",M,23,W | 2 |
| 2 | TCK78HM23W | TOP,CLOSE KIT,78",HM23,W | 1 |
| 3 | TRK9623W | TOP, ROOF KIT,96",23,W | 1 |
| 4 | THKFDT196M23 | HDW KIT, TFKFDT196HM23W | 1 |
| 5 | TMLHK | Topper Mechanical Lock Hatch Kit | 1 |

*** E-LOCK VERSION SWAP TMLHK WITH TELH06**

**BOM FOR 8.0' 23" TALL SILVERADO 1500, 2500, 3500**

| ITEM NO. | PART NUMBER | DESCRIPTION | QTY. |
|---|---|---|---|
| 1 | TSK96M23W | TOP, SIDE KIT,96",M,23,W | 2 |
| 2 | TCK78HM23W | TOP,CLOSE KIT,78",HM23,W | 1 |
| 3 | TRK9623W | TOP, ROOF KIT,96",23,W | 1 |
| 4 | THKGMT196M23 | HDW KIT, TFKGMT196HM23W | 1 |
| 5 | TMLHK | Topper Mechanical Lock Hatch Kit | 1 |

*** E-LOCK VERSION SWAP TMLHK WITH TELH03**

**BOM FOR 8.0' 23" TALL RAM 1500, 2500, 3500**

| ITEM NO. | PART NUMBER | DESCRIPTION | QTY. |
|---|---|---|---|
| 1 | TSK96M23W | TOP, SIDE KIT,96",M,23,W | 2 |
| 2 | TCK78HM23W | TOP,CLOSE KIT,78",HM23,W | 1 |
| 3 | TRK9623W | TOP, ROOF KIT,96",23,W | 1 |
| 4 | THKRAM196M23 | HDW KIT, TFKRAM196HM23W | 1 |
| 5 | TMLHK | Topper Mechanical Lock Hatch Kit | 1 |

*** E-LOCK VERSION SWAP TMLHK WITH TELH03**

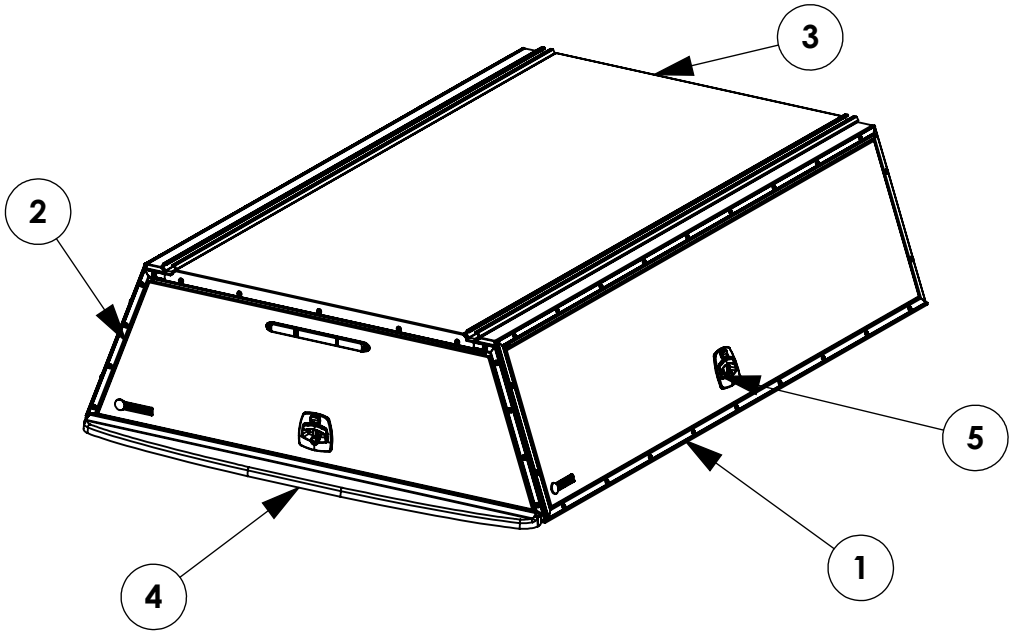

| INSTR. NUMBER : 71622 | PG: 4 | REV: W |
|---|---|---|
| PART NUMBER : TFK__T296HM26W | | |
| PART DESC. : ASM INS, TFK__T178HM23W | | |

**E-LOCK VERSIONS:**
**SWAP M WITH E IN PART NUMBER**
**EXAMPLE: TFKFDT178HM23W**
**BECOMES TFKFDT178HE23W**

**BOM FOR 8.0' 26" TALL FORD F-150, F-250, F-350**

| ITEM NO. | PART NUMBER | DESCRIPTION | QTY. |
|---|---|---|---|
| 1 | TSK96M26W | TOP, SIDE KIT,96",M,26,W | 2 |
| 2 | TCK80HM26W | TOP,CLOSE KIT,80",HM263,W | 1 |
| 3 | TRK9623W | TOP, ROOF KIT,96",23,W | 1 |
| 4 | THKFDT296M26 | HDW KIT, TFKFDT296HM26W | 1 |
| 5 | TMLHK | Topper Mechanical Lock Hatch Kit | 1 |

*** E-LOCK VERSION SWAP TMLHK WITH TELH06**

**BOM FOR 8.0' 26" TALL SILVERADO 1500, 2500, 3500**

| ITEM NO. | PART NUMBER | DESCRIPTION | QTY. |
|---|---|---|---|
| 1 | TSK96M26W | TOP, SIDE KIT,96",M,26,W | 2 |
| 2 | TCK80HM26W | TOP,CLOSE KIT,80",HM263,W | 1 |
| 3 | TRK9623W | TOP, ROOF KIT,96",23,W | 1 |
| 4 | THKGMT296M26 | HDW KIT, TFKGMT296HM26W | 1 |
| 5 | TMLHK | Topper Mechanical Lock Hatch Kit | 1 |

*** E-LOCK VERSION SWAP TMLHK WITH TELH03**

**BOM FOR 8.0' 26" TALL RAM 1500, 2500, 3500**
**NOTE: SPECIAL ASSEMBLY INSTRUCTION SHOWN ON SHEET 20**

| ITEM NO. | PART NUMBER | DESCRIPTION | QTY. |
|---|---|---|---|
| 1 | TSK96M26W | TOP, SIDE KIT,96",M,26,W | 2 |
| 2 | TCK80HM26W | TOP,CLOSE KIT,80",HM263,W | 1 |
| 3 | TRK9623W | TOP, ROOF KIT,96",23,W | 1 |
| 4 | THKRAM296M26 | HDW KIT, TFKRAM296HM26W | 1 |
| 5 | TMLHK | Topper Mechanical Lock Hatch Kit | 1 |

*** E-LOCK VERSION SWAP TMLHK WITH TELH03**

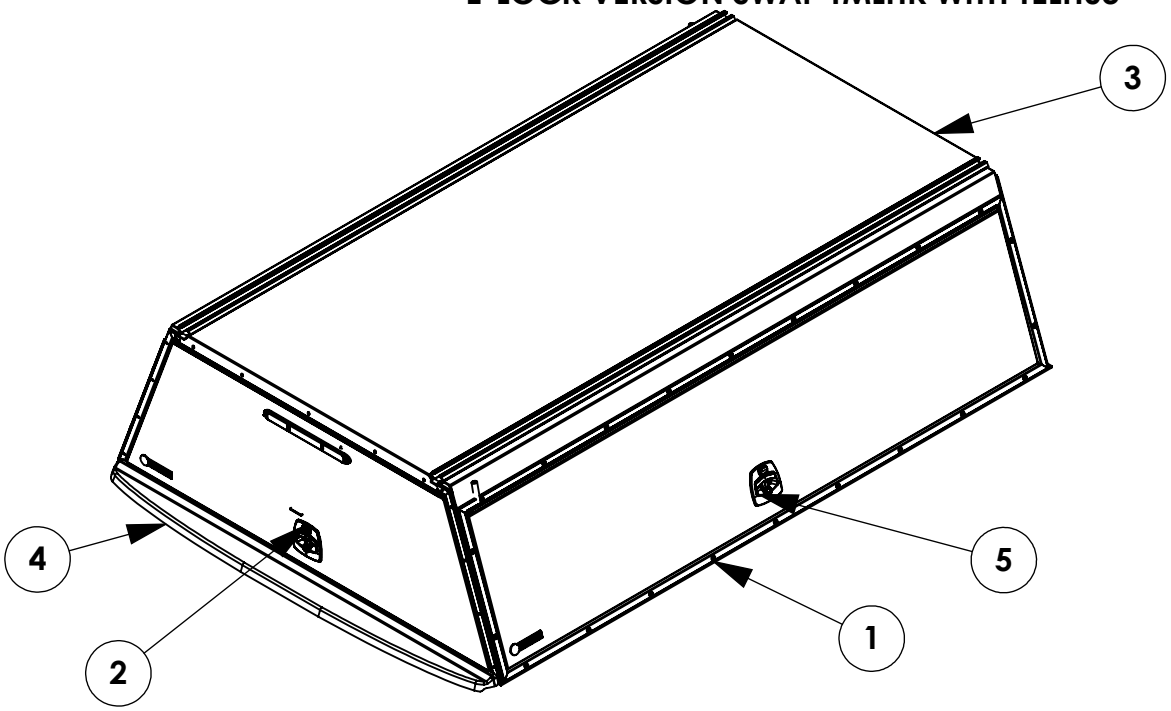

| INSTR. NUMBER : 71622 | PG: 5 | REV: W |
|---|---|---|
| PART NUMBER : TFKFDT166HM23W | | |
| PART DESC. : ASM INS, TFK__T178HM23W | | |

**E-LOCK VERSION: TFKFDT166HE23W**

**BOM FOR 5.5' 23" TALL FORD F-150 LIGHTNING/ICE**

| ITEM NO. | PART NUMBER | DESCRIPTION | QTY. |
|---|---|---|---|
| 1 | TSK66M23W | TOP, SIDE KIT,66",M,23,W | 2 |
| 2 | TCK78HM23W | TOP,CLOSE KIT,78",HM23,W | 1 |
| 3 | TRK6623W | TOP, ROOF KIT,66",23,W | 1 |
| 4 | THKFDT166M23 | HDW KIT, TFKFDT166HM23W | 1 |
| 5 | TMLHK | Topper Mechanical Lock Hatch Kit | 1 |

*** E-LOCK VERSION SWAP TMLHK WITH TELH04**

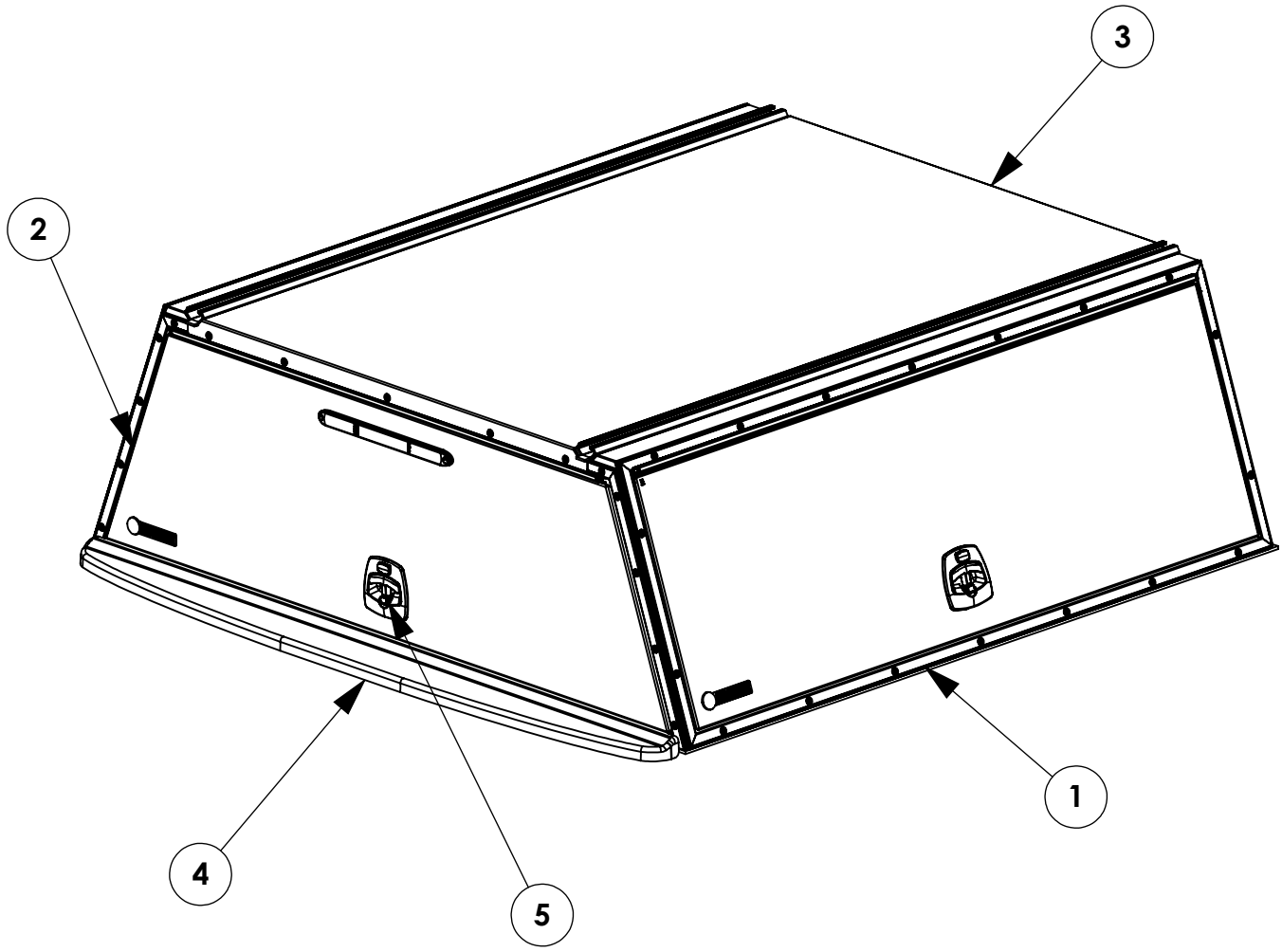

| INSTR. NUMBER : 71622 | PG: 6 | REV: W |
|---|---|---|
| PART NUMBER : TFKRNG160HM23W | | |
| PART DESC. : ASM INS, TFK__T178HE23W | | |

**BOM FOR 5' FORD RANGER**

| ITEM NO. | PART NUMBER | DESCRIPTION | QTY. |
|---|---|---|---|
| 1 | TSKRNG60M23W | TOP, SIDE KIT,60", RANGER,M,23,W | 2 |
| 2 | TCK72HM23W | TOP,CLOSE KIT,72",HM23,W | 1 |
| 3 | TRK6023W | TOP, ROOF KIT,60",23,W | 1 |
| 4 | THKRNG160M23 | HDW KIT, TFKNFT172HM23W | 1 |
| 5 | TMLHK | TOPPER MECHANICAL LOCK HATCH KIT | 1 |

**E-LOCK VERSION: TFKRNG160HE23W**

*** E-LOCK VERSION SWAP TMLHK WITH TELH04**

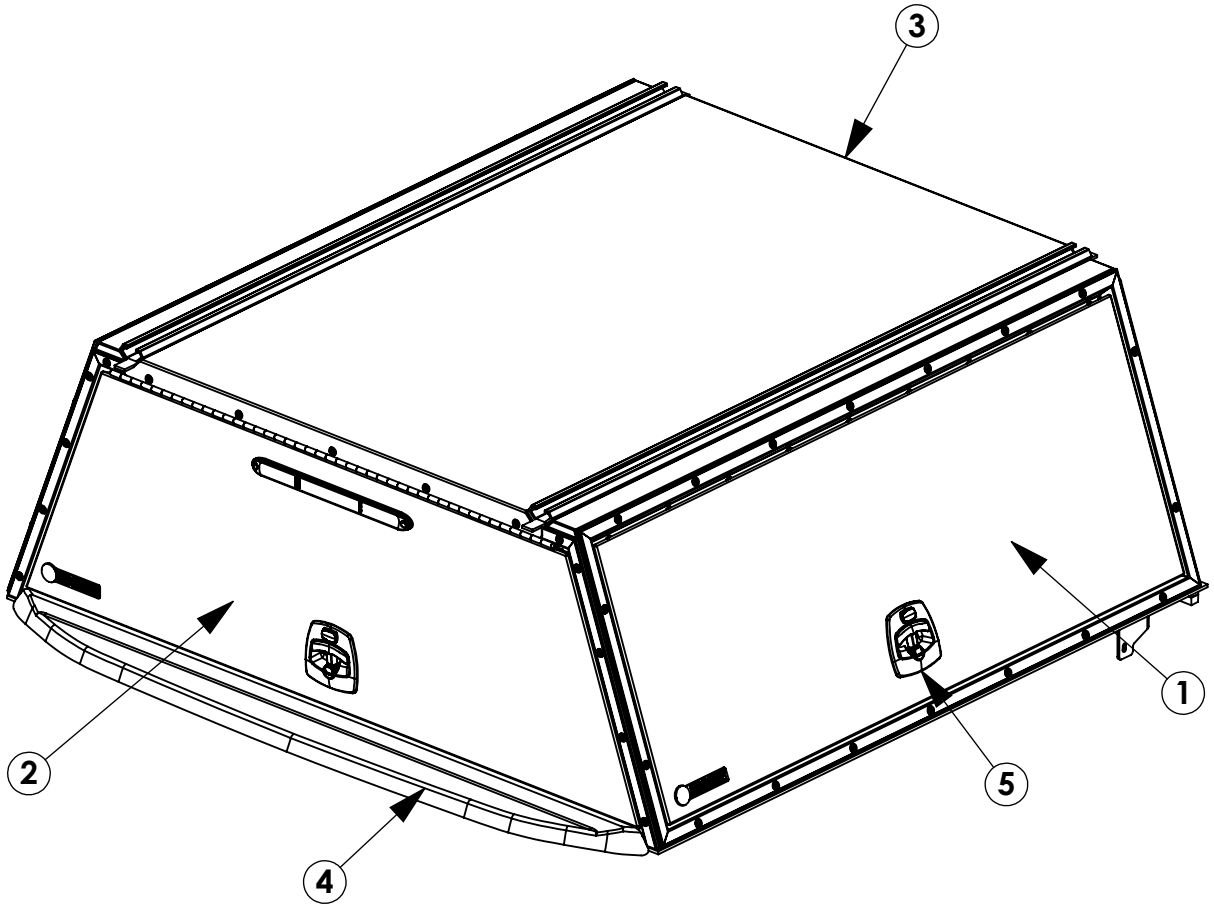

| INSTR. NUMBER : 71622 | PG: 7 | REV: W |
|---|---|---|
| PART NUMBER : TFKNFT172HM23W | | |
| PART DESC. : ASM INS, TFK__T178HM23W | | |

**E-LOCK VERSION: TFKNFT172HE23W**

**BOM FOR 6.0' 23" TALL NISSAN FRONTIER**

| ITEM NO. | PART NUMBER | DESCRIPTION | QTY. |
|---|---|---|---|
| 1 | TSK72M23W | TOP, SIDE KIT,72",M,23,W | 2 |
| 2 | TCK72HM23W | TOP,CLOSE KIT,72",HM23,W | 1 |
| 3 | TRK7223W | TOP, ROOF KIT,72",23,W | 1 |
| 4 | THKNFT172M23 | HDW KIT, TFKNFT172HM23W | 1 |
| 5 | TMLHK | Topper Mechanical Lock Hatch Kit | 1 |

*** E-LOCK VERSION SWAP TMLHK WITH TELH05**

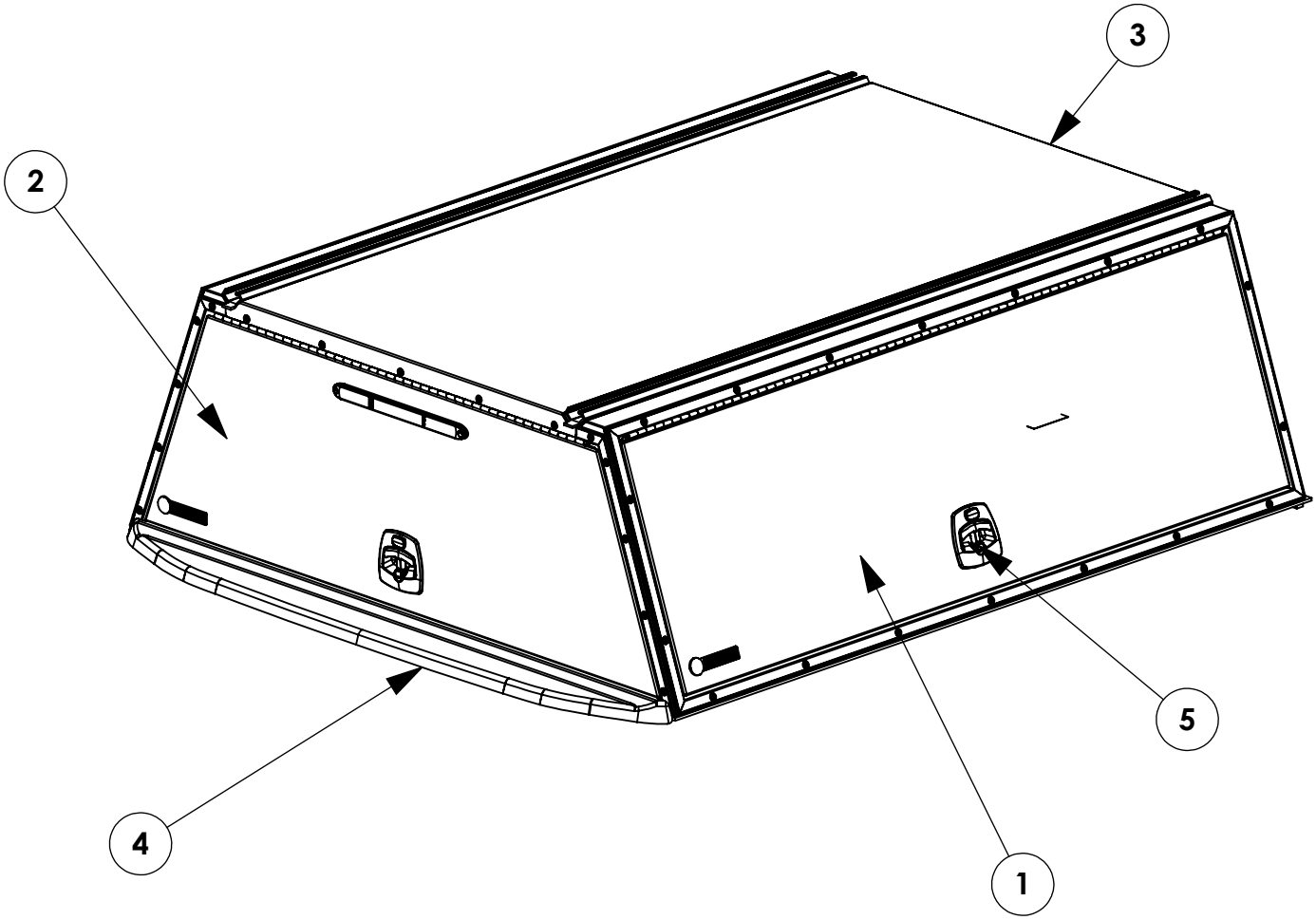

| INSTR. NUMBER : 71622 | PG: 8 | REV: W |
|---|---|---|
| PART NUMBER : TFKNFT160HM23W | | |
| PART DESC. : ASM INS, TFK__T178HM23W | | |

**E-LOCK VERSIONS:**
**SWAP M WITH E IN PART NUMBER**
**EXAMPLE: TFKFDT178HM23W**
**BECOMES TFKFDT178HE23W**

**BOM FOR 5.0' 23" TALL NISSAN FRONTIER**

| ITEM NO. | PART NUMBER | DESCRIPTION | QTY. |
|---|---|---|---|
| 1 | TSK60M23W | TOP, SIDE KIT,60",M,23,W | 2 |
| 2 | TCK72HM23W | TOP,CLOSE KIT,72",HM23,W | 1 |
| 3 | TRK6023W | TOP, ROOF KIT,60",23,W | 1 |
| 4 | THKNFT172M23 | HDW KIT, TFKNFT172HM23W | 1 |
| 5 | TMLHK | Topper Mechanical Lock Hatch Kit | 1 |

*** E-LOCK VERSION SWAP TMLHK WITH TELH04**

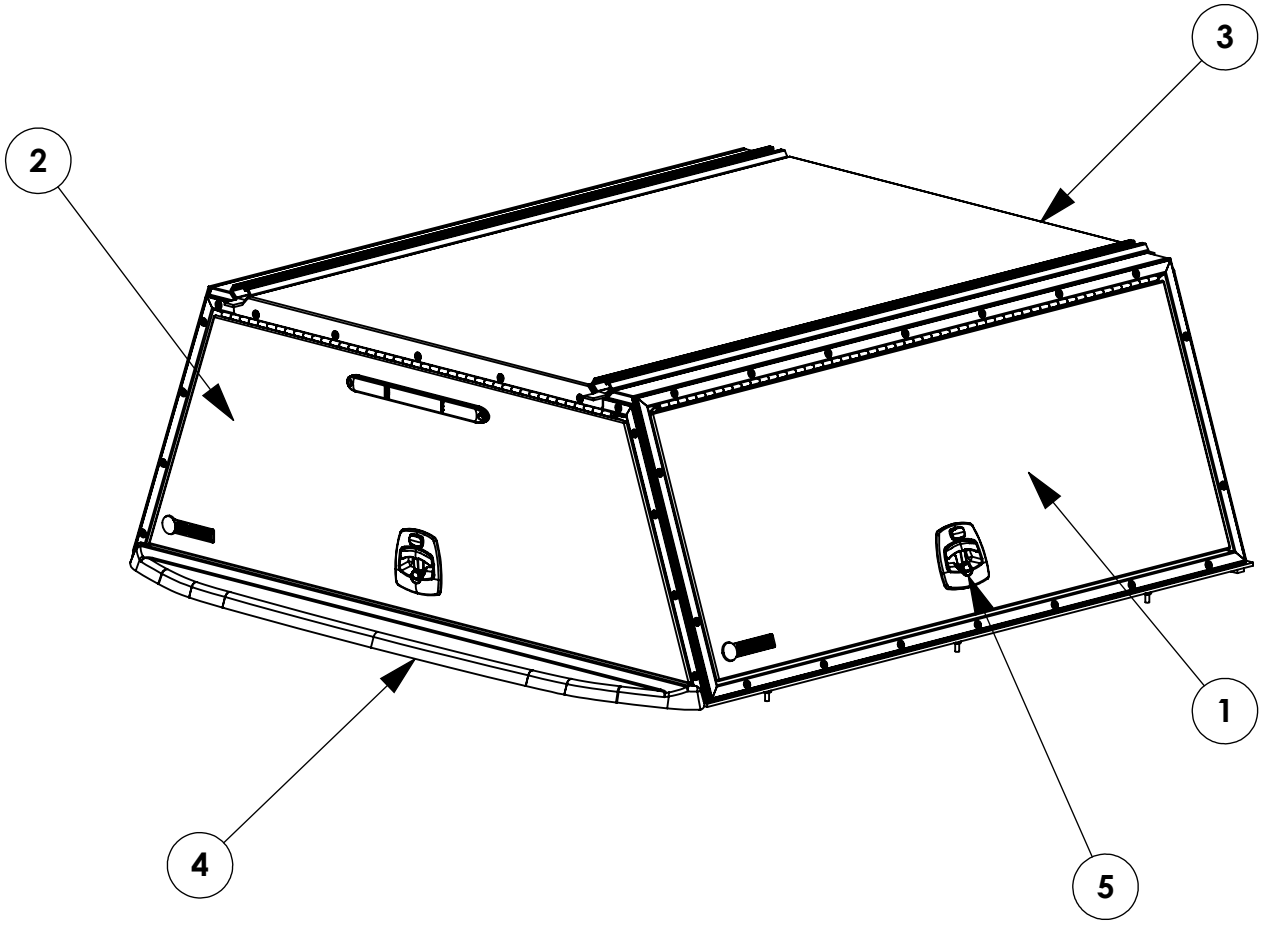

| INSTR. NUMBER : 71622 | PG: 9 | REV: W | BOM FOR 5.1' 23" TALL COLORADO |
|---|---|---|---|

PART NUMBER : **TFKNFT160HM23W**

PART DESC. : ASM INS, TFK__T178HM23W

| ITEM NO. | PART NUMBER | DESCRIPTION | QTY. |
|---|---|---|---|
| 1 | TSKCOL60M23W | TOP, SIDE KIT,60",M,23,W | 2 |
| 2 | TCK72HM23W | TOP,CLOSE KIT,72",HM23,W | 1 |
| 3 | TRK6123W | TOP, ROOF KIT,61",23,W | 1 |
| 4 | THKCOL60M23 | HDW KIT, TFKCOL160HM23W | 1 |
| 5 | TMLHK | Topper Mechanical Lock Hatch Kit | 1 |

**E-LOCK VERSIONS:**
**SWAP M WITH E IN PART NUMBER**
**EXAMPLE: TFKFDT178HM23W**
**BECOMES TFKFDT178HE23W**

*** E-LOCK VERSION SWAP TMLHK WITH TELH04**

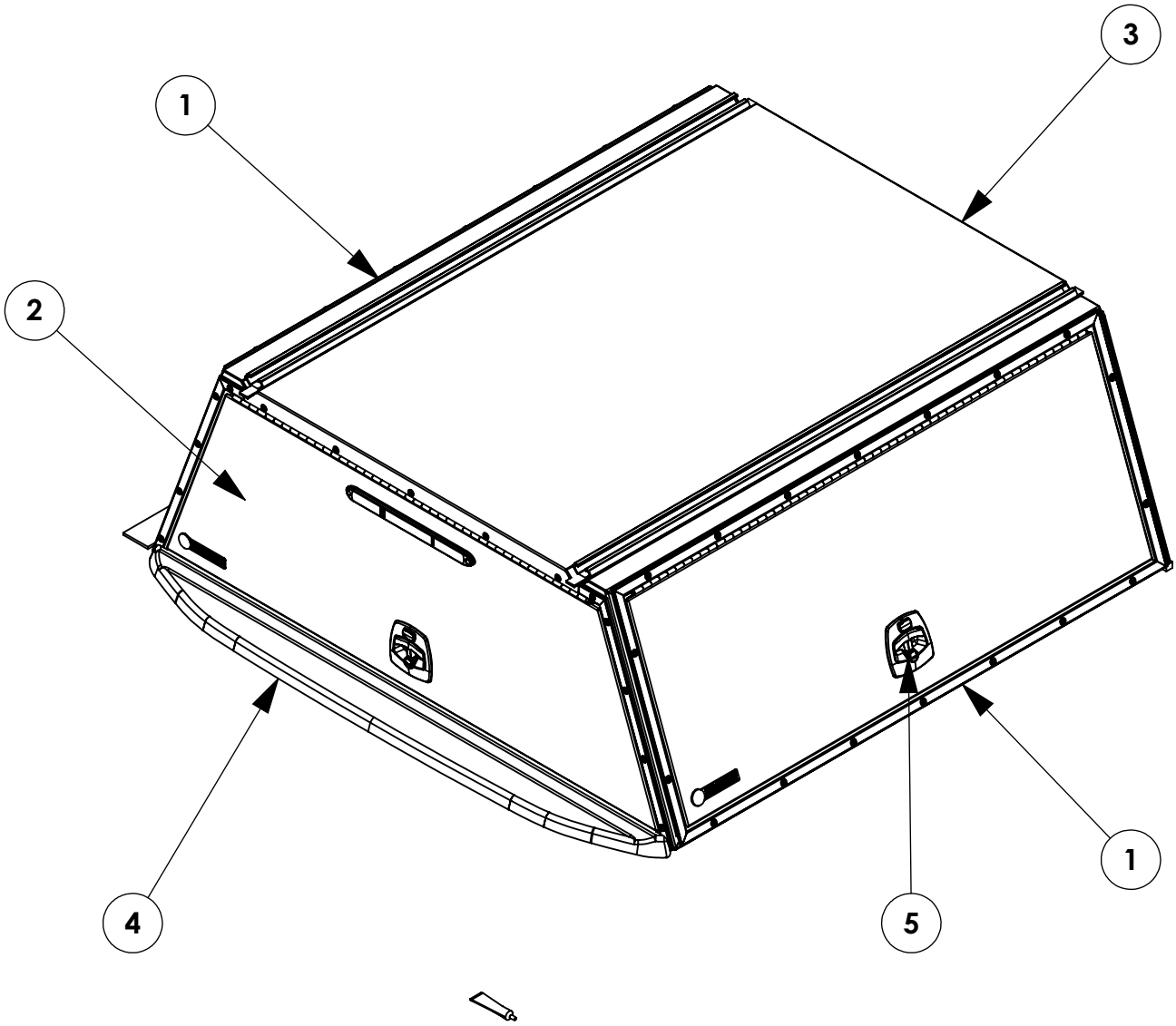

| INSTR. NUMBER : 71622 | PG: 10 | REV: W |
|---|---|---|

PART NUMBER : **TFKGME169HM23W**

PART DESC. : ASM INS, TFKGME169HM23W

**E-LOCK VERSIONS:**
**SWAP M WITH E IN PART NUMBER**
**EXAMPLE: TFKFDT178HM23W**
**BECOMES TFKFDT178HE23W**

**BOM FOR 69" 23" TALL SILVERADO EV 1500**

| ITEM NO. | PART NUMBER | DESCRIPTION | QTY. |
|---|---|---|---|
| 1 | TSK69M23WPS | TOP, SIDE KIT,SILVERADO EV, 69", PS | 1 |
| 2 | TSK69M23WDS | TOP, SIDE KIT,SILVERADO EV, 69",DS | 1 |
| 3 | TCKGMEHM23W | TOP,CLOSE KIT,SILVERADO EV,HM23,W | 1 |
| 4 | TRKGME6923W | TOP, ROOF KIT,69",23,W | 1 |
| 5 | THKGME169M23 | HDW KIT, TFKGME169HM23W | 1 |
| 6 | TMLHK | Topper Mechanical Lock Hatch Kit | 1 |

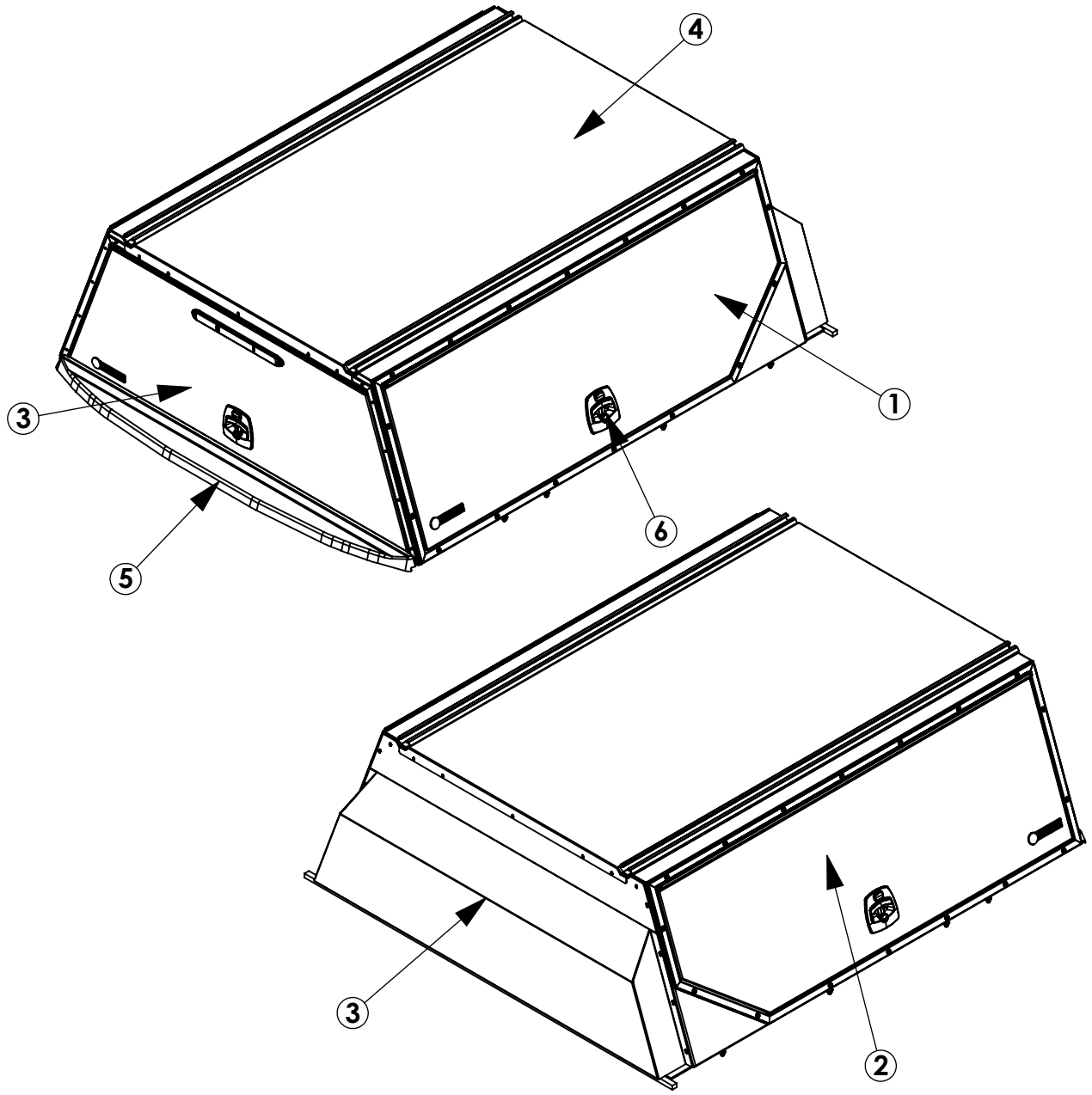

| INSTR. NUMBER : 71622 | PG: 11 | REV: W |
|---|---|---|
| PART NUMBER : TFKGMT280HM23W | | |
| PART DESC. : ASM INS, TFK__T178HM23W | | |

## BOM FOR 80" 23" TALL SILVERADO 2500, 3500

| ITEM NO. | PART NUMBER | DESCRIPTION | QTY. |
|---|---|---|---|
| 1 | TSK80M23W | TOP, SIDE KIT,80",M,23,W | 2 |
| 2 | TCK78HM23W | TOP,CLOSE KIT,78",HM23,W | 1 |
| 3 | TRK8026W | TOP, ROOF KIT,80",26,W | 1 |
| 4 | THKGMT280M23 | HDW KIT, TFKGMT280HM23W | 1 |
| 5 | TMLHK | Topper Mechanical Lock Hatch Kit | 1 |

**E-LOCK VERSIONS:**
**SWAP M WITH E IN PART NUMBER**
**EXAMPLE: TFKFDT178HM23W**
**BECOMES TFKFDT178HE23W**

*** E-LOCK VERSION SWAP TMLHK WITH TELH03**

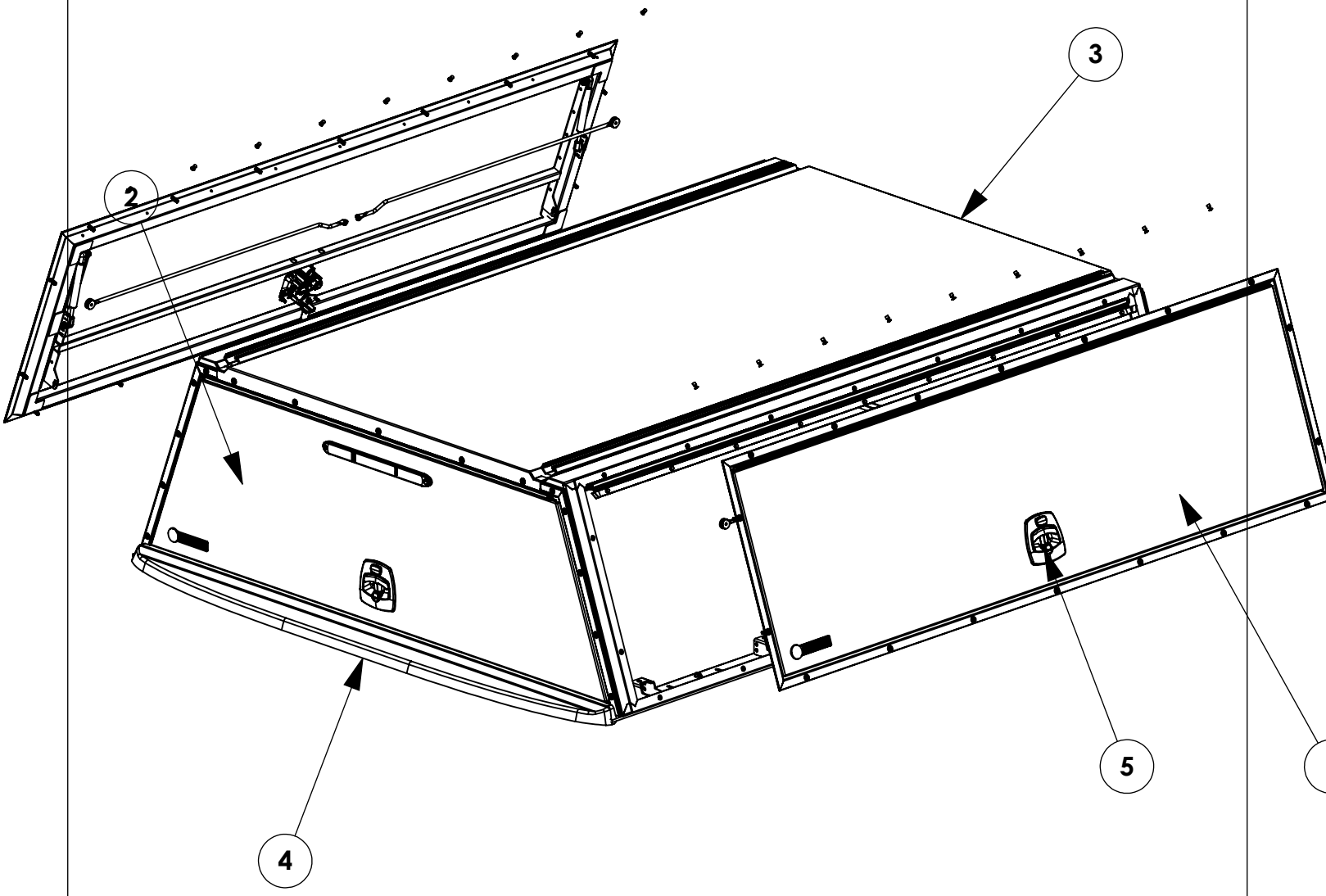

| INSTR. NUMBER : 71622 | PG: 12 | REV: W |
|---|---|---|
| PART NUMBER : TFKGMT170HM23W | | |
| PART DESC. : ASM INS, TFK__T178HM23W | | |

## BOM FOR 70" 23" TALL SILVERADO 1500

| ITEM NO. | PART NUMBER | DESCRIPTION | QTY. |
|---|---|---|---|
| 1 | TSK70M23W | TOP, SIDE KIT,70",M,23,W | 2 |
| 2 | TCK78HM23W | TOP,CLOSE KIT,78",HM23,W | 1 |
| 3 | TRK7023W | TOP, ROOF KIT,70",23,W | 1 |
| 4 | THKGMT280M23 | HDW KIT, TFKGMT280HM23W | 1 |
| 5 | TMLHK | Topper Mechanical Lock Hatch Kit | 1 |

**E-LOCK VERSIONS:**
**SWAP M WITH E IN PART NUMBER**
**EXAMPLE: TFKFDT178HM23W**
**BECOMES TFKFDT178HE23W**

*** E-LOCK VERSION SWAP TMLHK WITH TELH03**

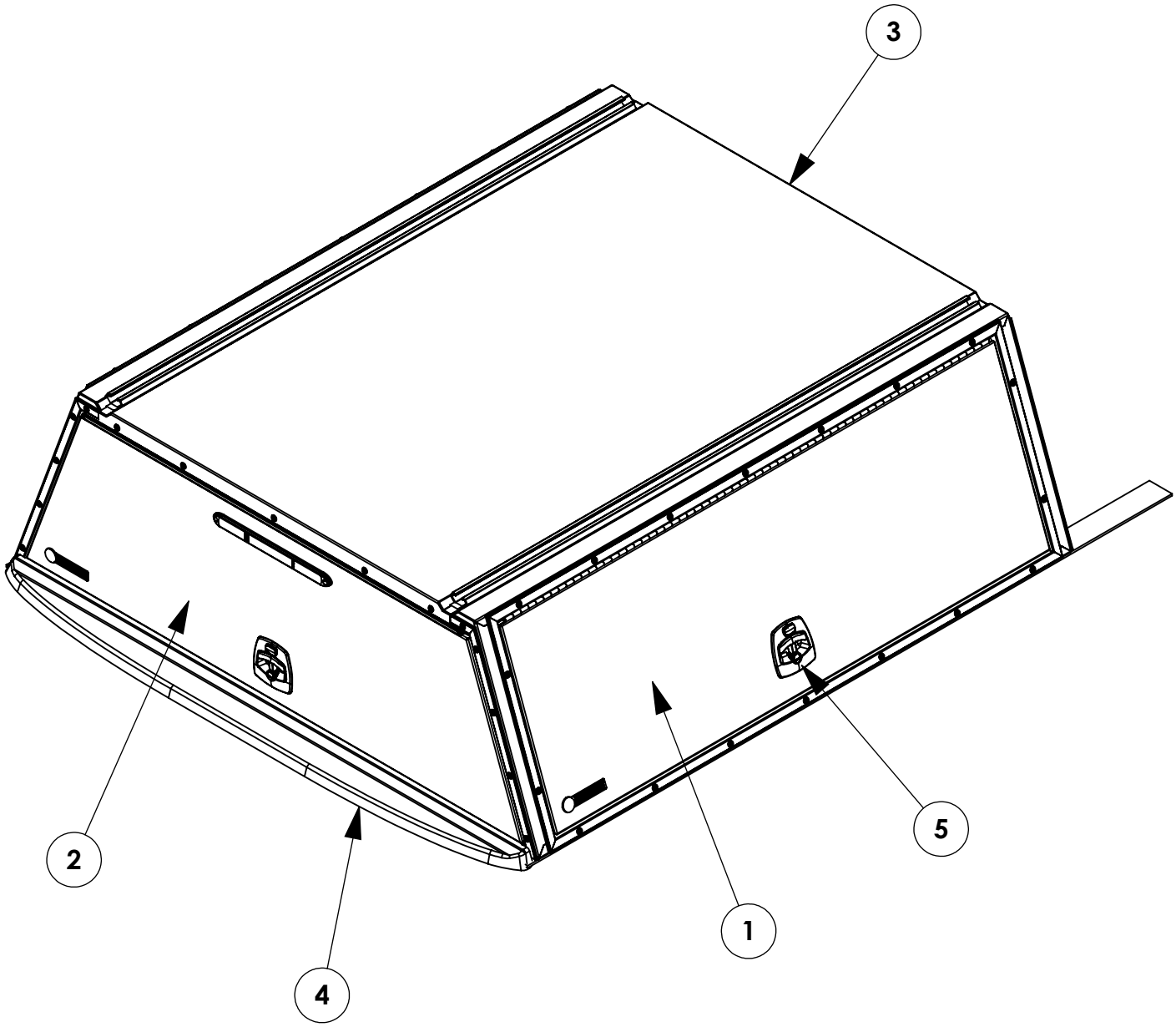

## *BEST PRACTICES*

**GET TO KNOW THE VEHICLE** - AT THE BEGINNING OF ANY INSTALLATION, CHECK THE LOCATION OF THE FUEL TANK, FUEL LINES, BRAKE LINES, HIGH VOLTAGE BATTERIES AND WIRING HARNESSES TO AVOID INJURY OR PROPERTY DAMAGE FROM TOOL CONTACT.

**SEAL ALL EXTERIOR HOLES** - ALL INSTALLATION HOLES SHOULD BE SEALED WITH BUTYL TAPE OR SILICON TO PREVENT WATER AND EXHAUST GASES FROM ENTERING THE VEHICLE.

**CONTROL DRILL DEPTH** - TO AVOID DAMAGE TO THE VEHICLE, USE A DRILL STOP OR CLEARED STEP BIT WHEN DRILLING INSTALLATION HOLES.

**ALWAYS ADD PRIMER** - WHEN ADDING INSTALLATION HOLES BE SURE TO USE A SELF-ETCHING PRIMER TO PREVENT CORROSION, FASTENER FAILURE AND INJURY.

**MOUNTING POINTS MUST HAVE METAL-TO-METAL CONTACT** - USE PROVIDED MOUNTING SPACERS TO ACCOMMODATE FOR VEHICLE FEATURES, CARPET OR SUBFLOORS.

**PROVIDE CLEARANCE FOR SPACERS** - IF THE INSTALLATION VEHICLE CONTAINS A CARPET OR SUBFLOOR, USE A 1-3/16" DIAMETER CARPET CUTTER (P/N: 31183-0) AT ALL MOUNTING LOCATIONS TO OPEN UP ROOM FOR SPACERS.

**CHECK SPACER ORIENTATION** - BE SURE THAT THE INDENT IN THE SPACER COVERS THE PLUSNUT HEAD; THIS ENSURES THE MOST METAL-TO-METAL CONTACT AND REDUCES VIBRATION.

**PLUSNUT INSTALLATION** - A PLUSNUT GUN IS RECOMMENDED FOR PLUSNUT INSTALLATION FOR ITS PRODUCTION SPEED. HOWEVER, A PLUSNUT SETTING TOOL CAN ALSO BE USED (P/N: 22200-0).

**THRU-BOLT CLEARANCE** - WHEN USING A THRU-BOLT AT ANY MOUNTING LOCATION, BE SURE THAT YOUR HOLE HAS 1/16" CLEARANCE.

**INTENTIONALLY LEFT BLANK**

**BEST PRACTICE: ORGANIZE ALL FASTENERS & VERIFY THAT ALL ARE ACCOUNTED FOR**



## *FASTENERS USED*

***BAG REFERENCE:*** **ALL**

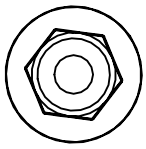

**FAS0055**
**1/4-20 ZP**
**HFLNG NLK NUT**
**QTY: 10**

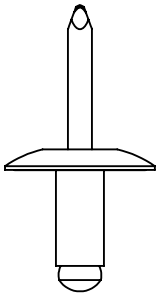

**FAS1014**
**.25X.11GR AL**
**RIVET, BLND**
**QTY: 5**

**FAS0919**
**5/16-18 X 1.25 SST**
**BHC SCREW**
**QTY: 10**

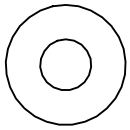

**FAS0234**
**1/4 SST**
**FLAT WASHER**
**QTY: 30**

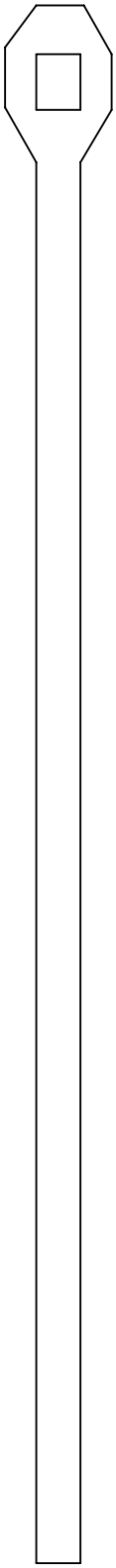

**78320**
**7.5" STUD MNT**
**CABLE TIE**
**QTY: 5**

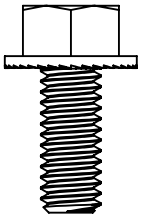

**FAS0438**
**5/16-18 X .75 ZP**
**HFNLG SCREW**
**QTY: 16**

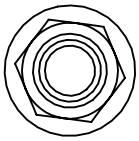

**FAS0440**
**5/16-18 ZP**
**HFLNG NLK NUT**
**QTY: 16**

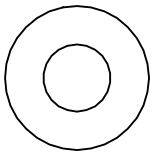

**FAS0552**
**5/16 SST**
**FLAT WASHER**
**QTY: 10**

**FAS0940**
**1/4-20 X 1.0 SS NP**
**BHTX SCREW**
**QTY: 30**

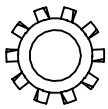

**FAS0066**
**1/4 LOCK WASHER**
**EXT. TOOTH**
**QTY: 1**

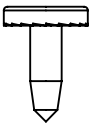

**FAS0148**
**#10 X 0.5 NI-ZN**
**PH SELF DRILL SCREW**
**QTY: 1**

INTENTIONALLY LEFT BLANK

**BEST PRACTICE: ORGANIZE ALL FASTENERS & VERIFY THAT ALL ARE ACCOUNTED FOR**



## *FASTENERS USED*

***BAG REFERENCE:*** **ALL**

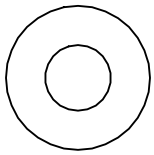

**FAS0164**
**5/16 ALUM**
**FLAT WASHER**
**QTY BAG71794: 0**
**QTY BAG71801: 8**

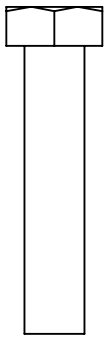

**FAS0242**
**5/16-18 X 1.5 SST**
**HH SCREW**
**QTY BAG71794: 8**
**QTY BAG71801: 8**

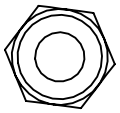

**FAS0248**
**5/16-18 SST**
**HH NLK NUT**
**QTY BAG71794: 8**
**QTY BAG71801: 8**

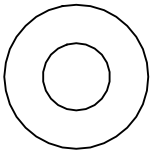

**FAS0552**
**5/16 SST**
**FLAT WASHER**
**QTY BAG71794: 16**
**QTY BAG71801: 8**

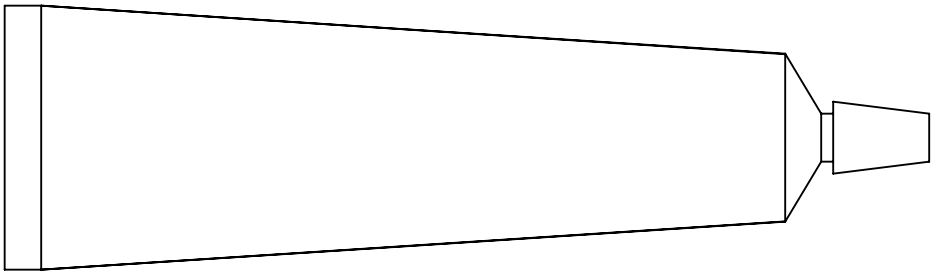

**26618-0**
**1 OZ TUBE**
**SILICONE**
**QTY BAG71794: 2**
**QTY BAG71801: 2**
**QTY THKCOL60M23: 1**

**INTENTIONALLY LEFT BLANK**

## *FASTENERS USED*

***BAG REFERENCE:*** **BAG76637**

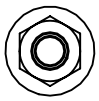

**FAS0917**
**M5 X .8 ZP**
**HFLNG NLK NUT**
**QTY: 12**

**FAS0918**
**10-24 ZP**
**HFLNG NLK NUT**
**QTY: 6**

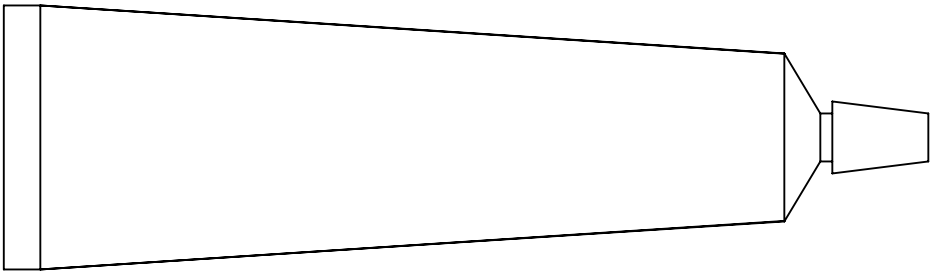

**26618-0**
**1 OZ TUBE**
**SILICONE**

**INTENTIONALLY LEFT BLANK**

# STEP 1 - ASSEMBLE BODY FRAME: SIDES AND CROSSBOWS

**Step 1.1**
**OPEN [x2] TOPPER SIDE KITS [TSK78M23W]**

**Step 1.2**
**OPEN TOPPER ROOF KIT [TRK7823W]**

**Step 1.3**
**FULLY TIGHTEN FAS0438 AND FAS0440 (16 PLACES)**
**1/2" WRENCH**
**1/2" SOCKET**

**Step 1.4**
**ADD FOAM STRIP 80402 TO THE MIDDLE OF EACH CROSSBOW (4 PLACES)**

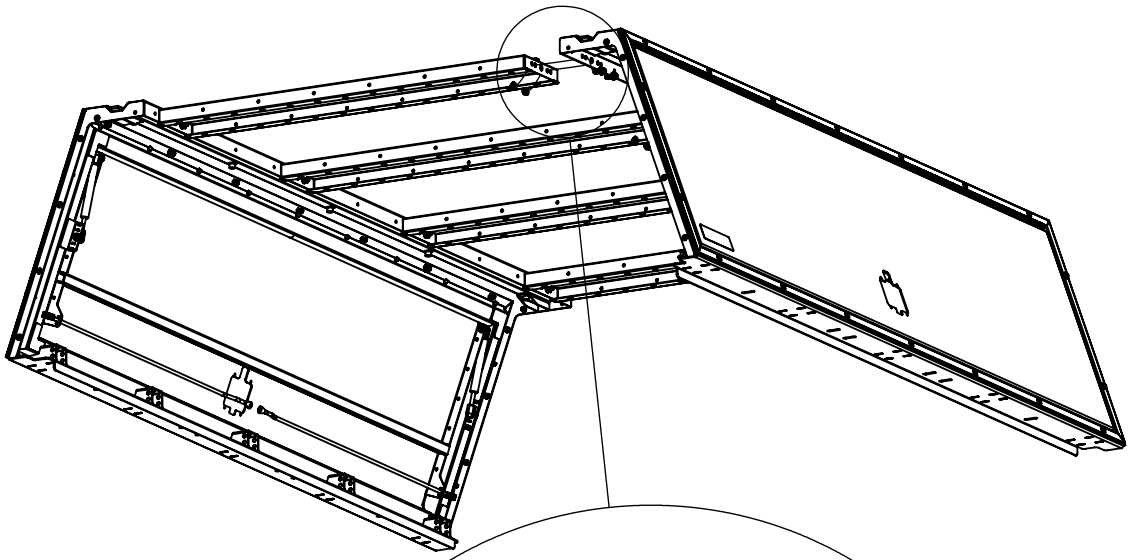

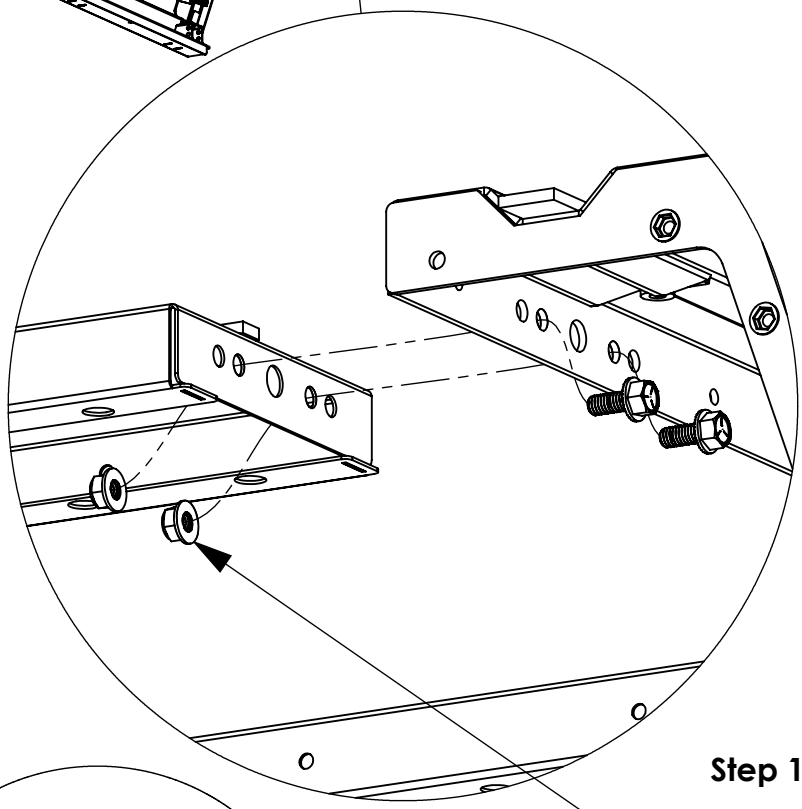


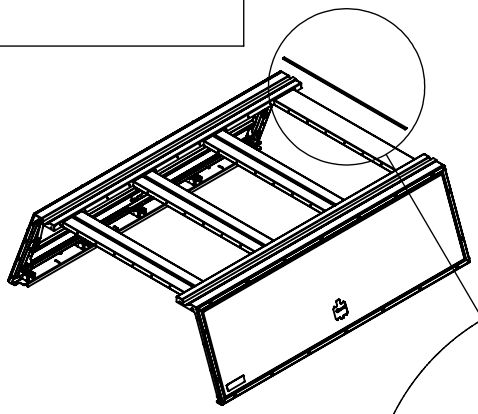

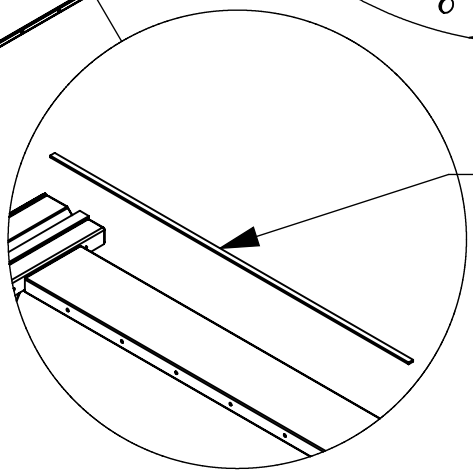

# STEP 2 - ATTACH HARDWARE: SIDE DOOR HANDLES, FRONT & REAR SEALS

**Step 2.1**
**CUT ZIP TIES THAT ARE HOLDING LOCKRODS IN PLACE.**

**!! CAUTION !! DOORS MAY TRY TO OPEN.**

**Step 2.2**
**ATTACH HANDLE TO DOOR**

**FULLY TIGHTEN**
**FAS0917**
**(4 PER DOOR)**
**M10 SOCKET**

**DO NOT OVERTIGHTEN**

**Step 2.3**
**ATTACH LOCKRODS TO HANDLE**

**FULLY TIGHTEN**
**FAS0918**
**(2 PLACES)**
**M8 SOCKET**

**DO NOT OVERTIGHTEN**

**Step 2.4**
**ADJUST HANDLE POINT TO ALIGN WITH CASTING LINE ON HANDLE BODY (APPROX: 1.0")**

**FULLY TIGHTEN 4mm ALLEN (2 PLACES)**

**Step 2.5**
**APPLY FOAM SEALS TO ALL CORNERS.**

**USE HOLES IN SEAL TO ALIGN MATERIAL.**

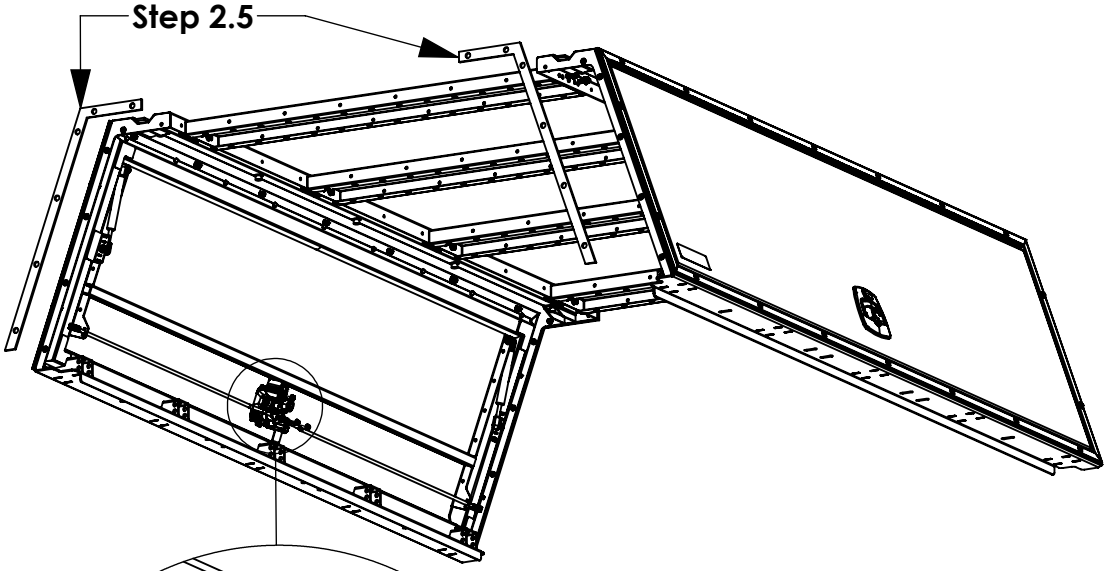


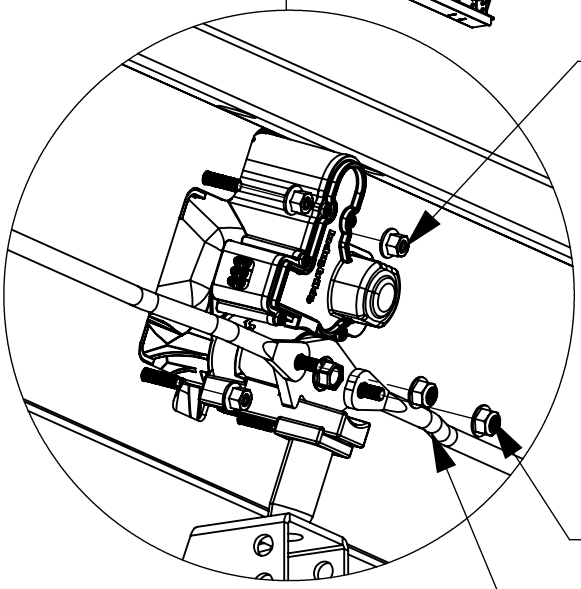


STOP **STEP 2.2 & 2.3 HAVE DIFFERENT SIZED FASTENERS**

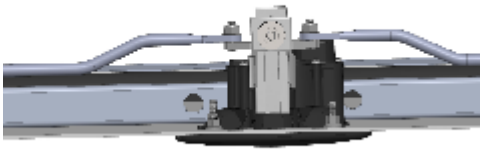

**NOTE THAT ORIENTATION OF LOCKRODS IS CRITICAL** STOP

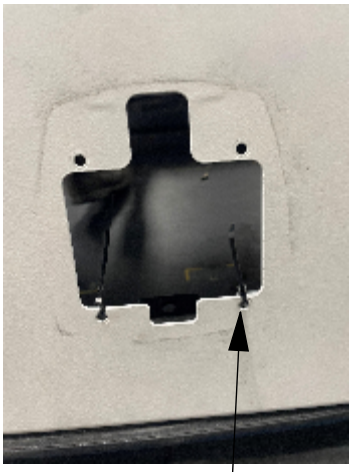


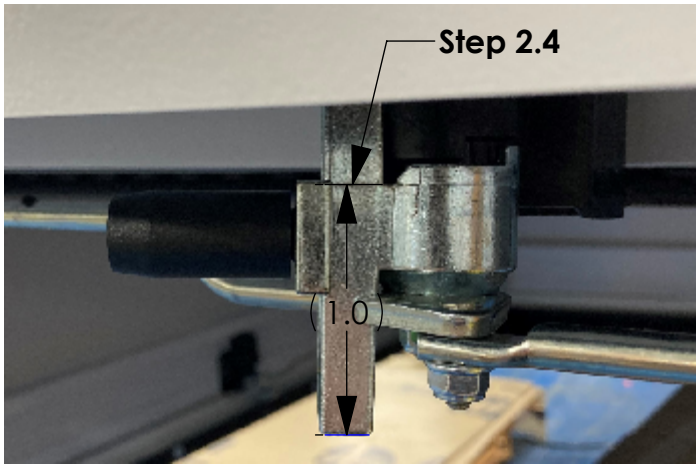

# STEP 3 - ATTACH FRONT PANEL

**Step 3.1**
**OPEN TOPPER CLOSURE KIT [TCK78HM23W]**

**Step 3.2**
**ATTACH FRONT PANEL**

**HAND TIGHTEN**
**FAS0234, FAS0940 (10 PLACES)**

**DO NOT TIGHTEN UNTIL AFTER STEP 4**

**Step 3.2B**
**COLORADO FRONT PANEL FLANGE IS OUTBOARD**

**DO NOT TIGHTEN UNTIL AFTER STEP 4**

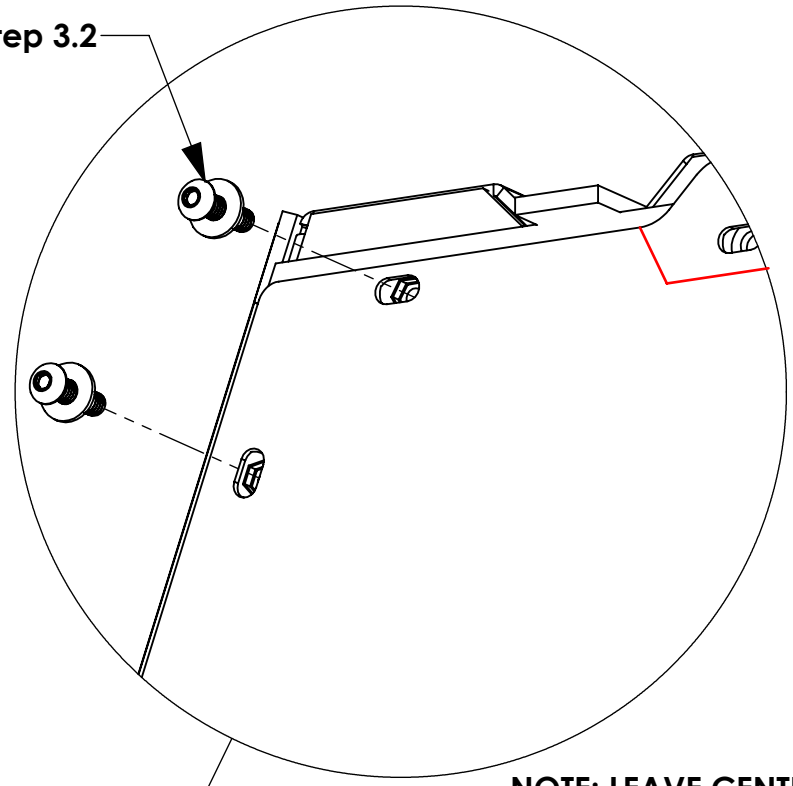


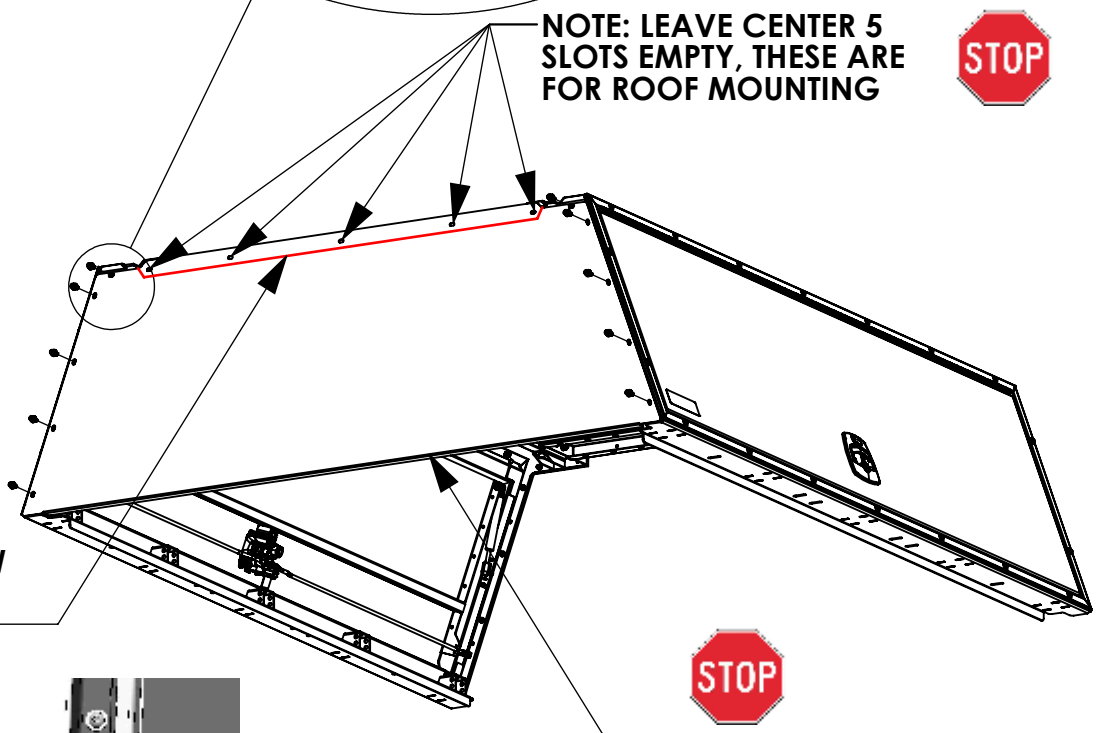


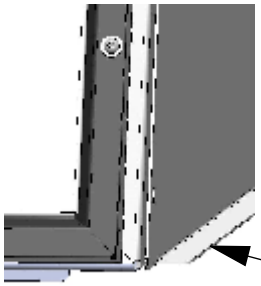

# STEP 4 - ATTACH LIFTGATE

**Step 4.1**
**ATTACH LIFTGATE FRAME**

**FULLY TIGHTEN**
**FAS0234, FAS0940**
**(10 PLACES)**
**5/32" ALLEN**

**Step 4.2**
**GO BACK AND FULLY TIGHTEN FASTENERS FROM STEP 3.2**

**(10 PLACES)**
**5/32" ALLEN**

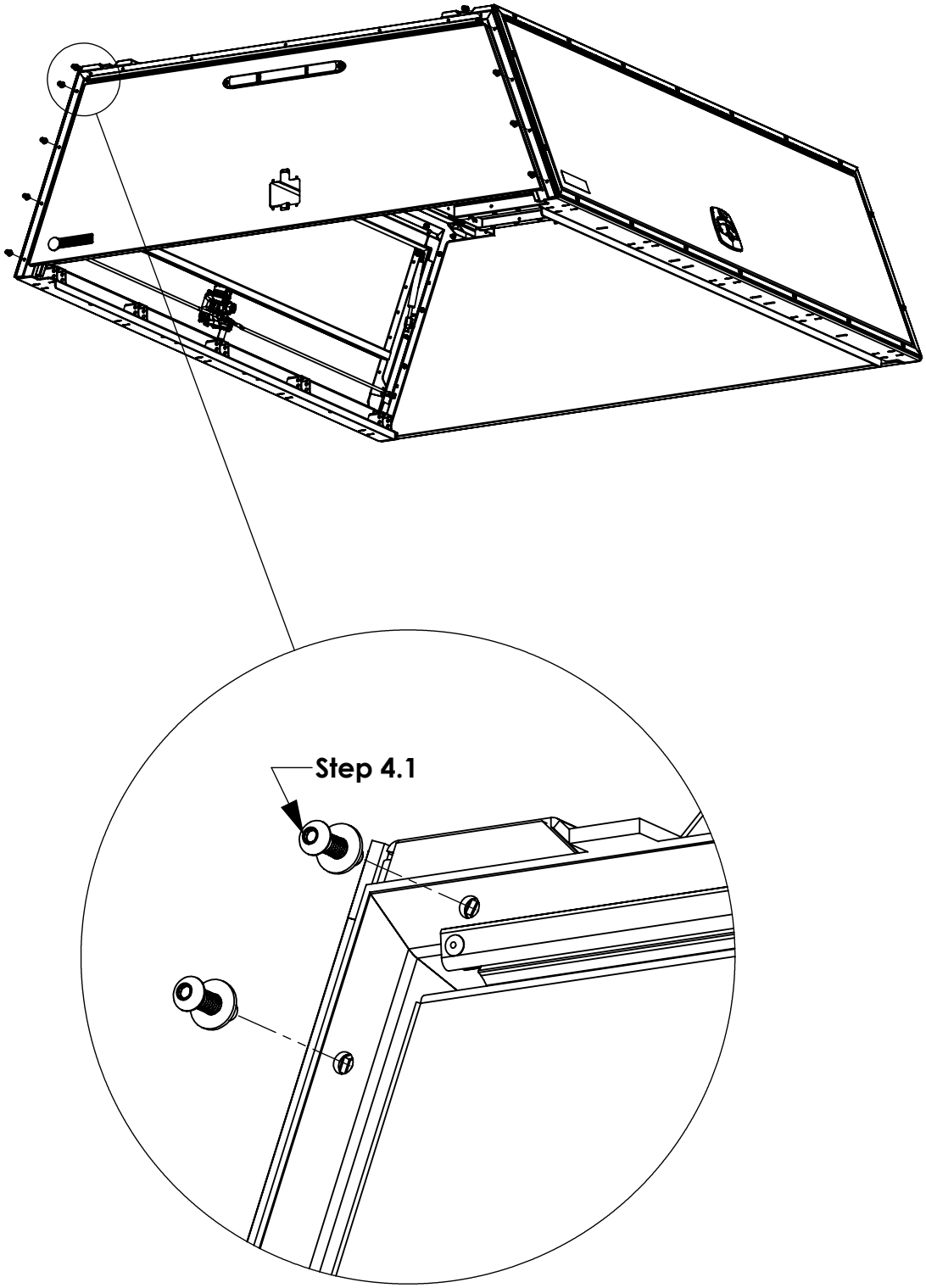

# STEP 5 - ATTACH LIFTGATE HANDLE

**Step 5.1**
**CUT ZIP TIES THAT ARE HOLDING LOCKRODS IN PLACE.**

**!! CAUTION !!**
**DOOR MAY TRY TO OPEN.**

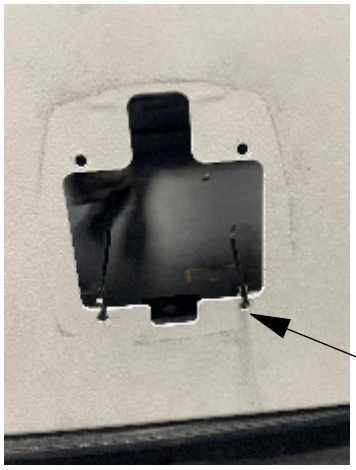


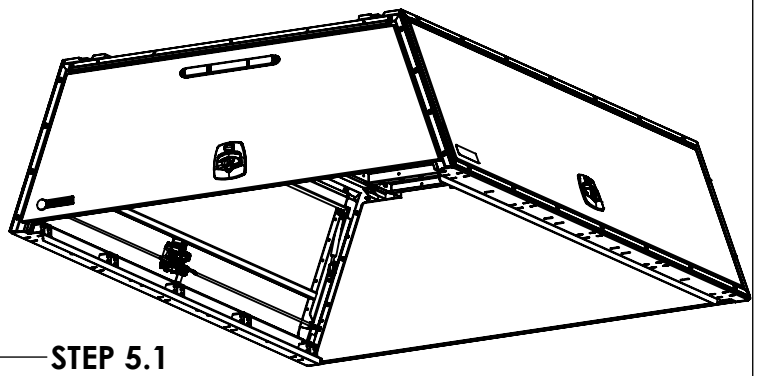

**Step 5.2**
**ATTACH HANDLE TO DOOR**

**<u>FULLY TIGHTEN</u>**
**FAS0917**
**(4 PER DOOR)**
**M10 SOCKET**

**DO NOT OVERTIGHTEN**

**Step 5.3**
**ATTACH LOCKRODS TO HANDLE**

**<u>FULLY TIGHTEN</u>**
**FAS0918**
**(2 PLACES)**
**M8 SOCKET**

**DO NOT OVERTIGHTEN**

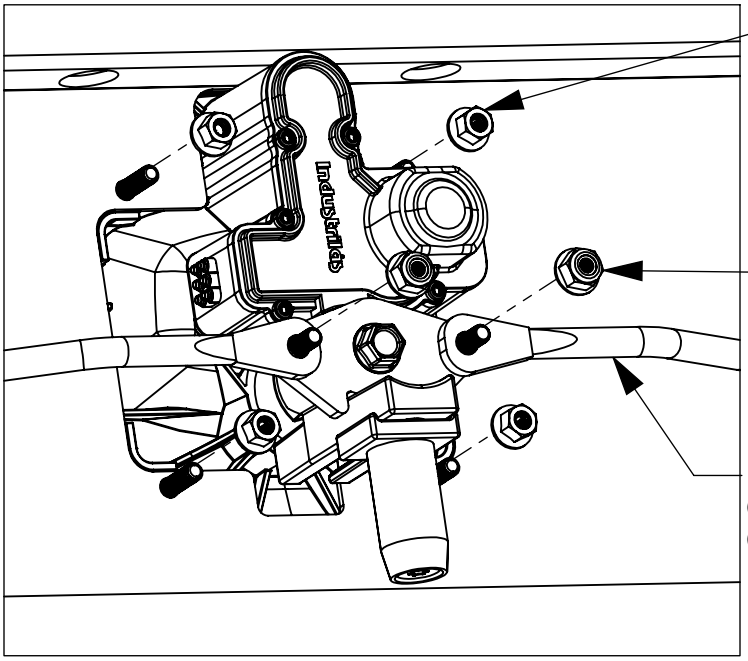


**Step 5.4**
**ADJUST HANDLE POINT TO ALIGN WITH CASTING LINE ON HANDLE BODY**
**(APPROX: 1.0")**

**FULLY TIGHTEN**
**M4 ALLEN**
**(2 PLACES)**

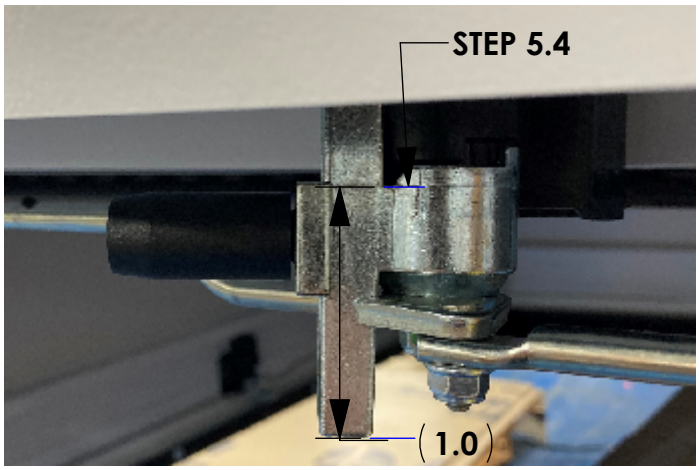

# STEP 6 - ATTACH ROOF AND ROOF RAILS

**Step 6.1**
**PLACE ROOF PANEL ON TOPPER BODY, BUT SLID FORWARD OF FRONT PANEL TO AVOID REMOVING SILICONE APPLIED IN STEP 3. THEN SLIDE ROOF PANEL INTO CORRECT POSITION.**

**Step 6.2**
**ATTACH MOUNTING RAILS TO TOPPER BODY.**

**USE AN ALIGNMENT PUNCH TO POKE THROUGH SEALS**

**<u>FULLY TIGHTEN</u>**
**FAS0552,**
**FAS0919**
**(10 PLACES)**
**3/16" ALLEN**

**Step 6.3**
**ATTACH ROOF TO TOPPER BODY.**

**<u>FULLY TIGHTEN</u>**
**FAS0055,**
**FAS0552,**
**FAS0940**
**(10 PLACES)**
**5/32" ALLEN**
**7/16" WRENCH**

**STOP**

**PLEASE NOTE THAT ORDER OF OPERATIONS ON THESE BUILD STEPS IS CRITICAL TO A PROPER SEAL!**

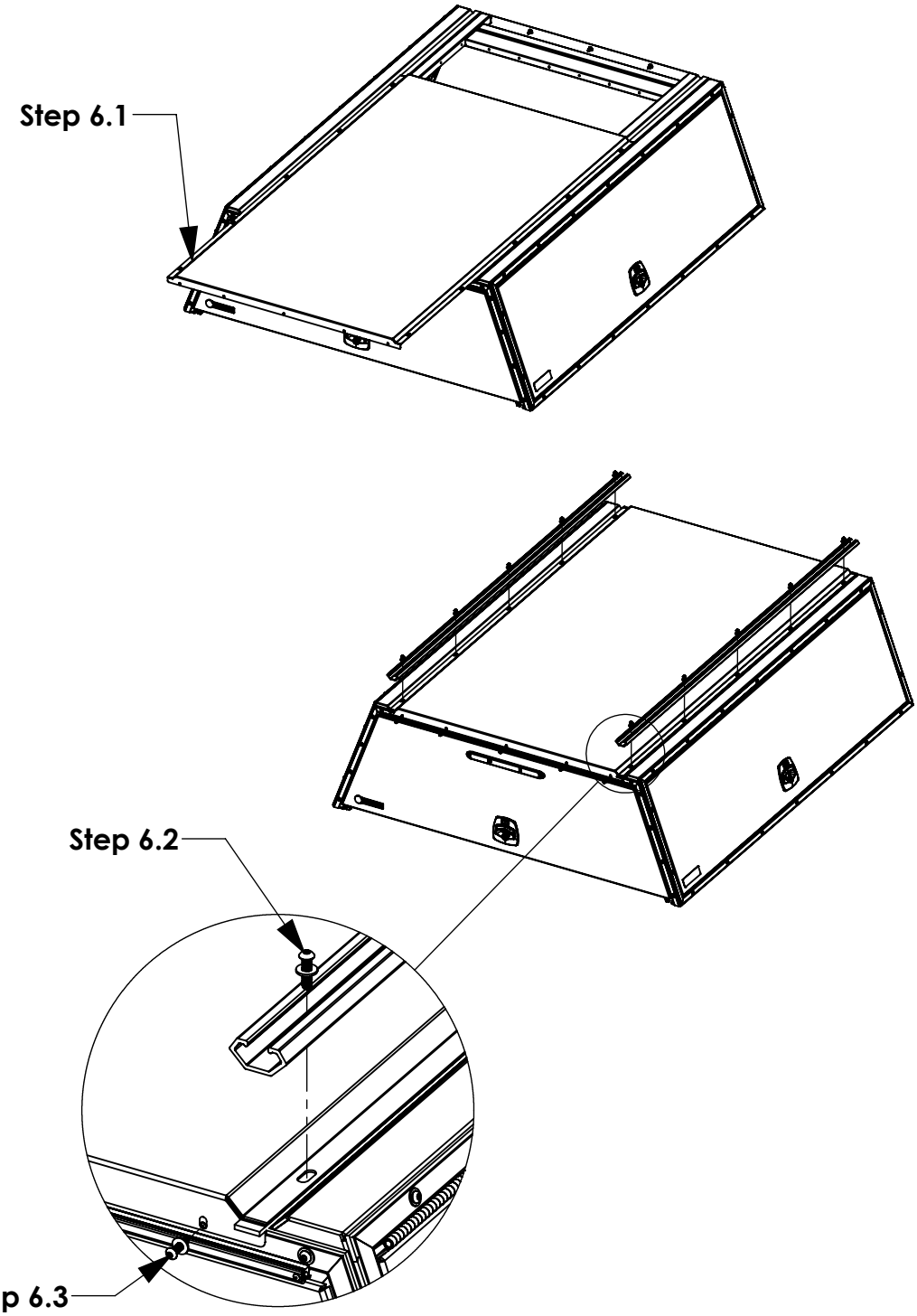

# STEP 7 - ATTACH TAILGATE COVER

**Step 7.1**
**ADD SILICONE TO CORNER OF TAILGATE COVER AND AROUND BOTTOM FACE MOUNTING HOLES.**

**Step 7.2**
**ATTACH TAILGATE COVER TO REAR DOOR.**

**<u>FULLY SECURE</u>**
**FAS1014**
**(5 PLACES)**

**1/4" RIVET TIP**

**Step 7.3**
**COLORADO & SILVERADO.**
**PREP WITH 57392 ADHESION PROMOTER.**

**ADD 77152 D-SEAL X 22" LG TO BOTH SIDE OF TAILGATE COVER**

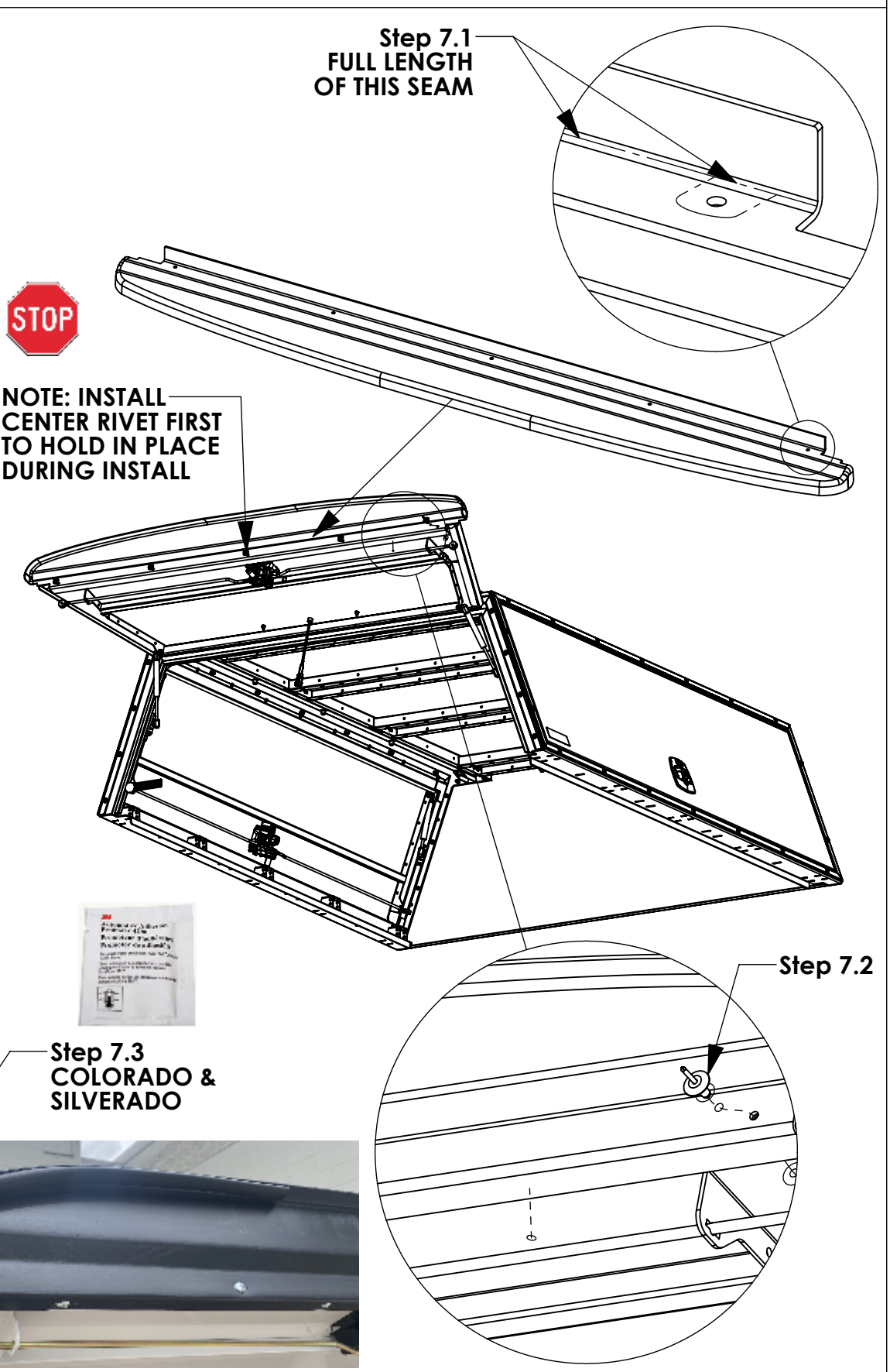

# STEP 8 - ATTACH SEALS TO TRUCK BED

**Step 8.1**
**INSTALL FRONT BED SEAL. REFER TO TABLE 1 TO GET OEM SPECIFIC DISTANCE OFF OF THE INSIDE EDGE OF THE BED. CENTER BETWEEN THE DRIVER AND PASSENGER SIDE BED RAIL TRIM.**

**TRIM OFF EXTRA, IF NECESSARY.**

**Step 8.2**
**INSTALL SIDE BED SEALS. ALIGN TO THE FRONT AND INSIDE EDGES OF THE SIDE BED RAIL TRIM.**

**DO NOT TRIM EXCESS UNTIL TOPPER IS ON THE TRUCK.**

**Step 8.3**
**COLORADO ONLY !**
**INSTALL SIDE BED SEALS. ALIGN TO THE FRONT AND INSIDE EDGES OF THE SIDE BED RAIL TRIM.**

**DO NOT TRIM EXCESS UNTIL TOPPER IS ON THE TRUCK.**

**TOP VIEW -COLORADO, SILVERADO & RAM, FULL DISTANCE AT FRONT EDGE**

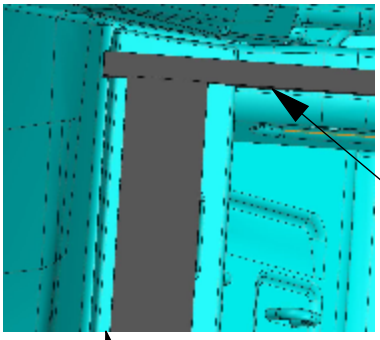


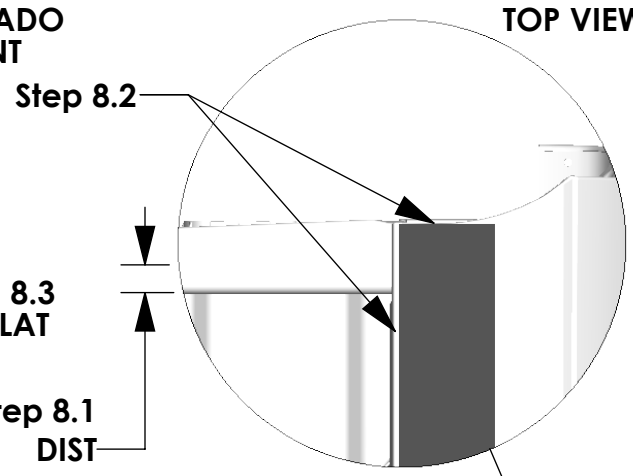


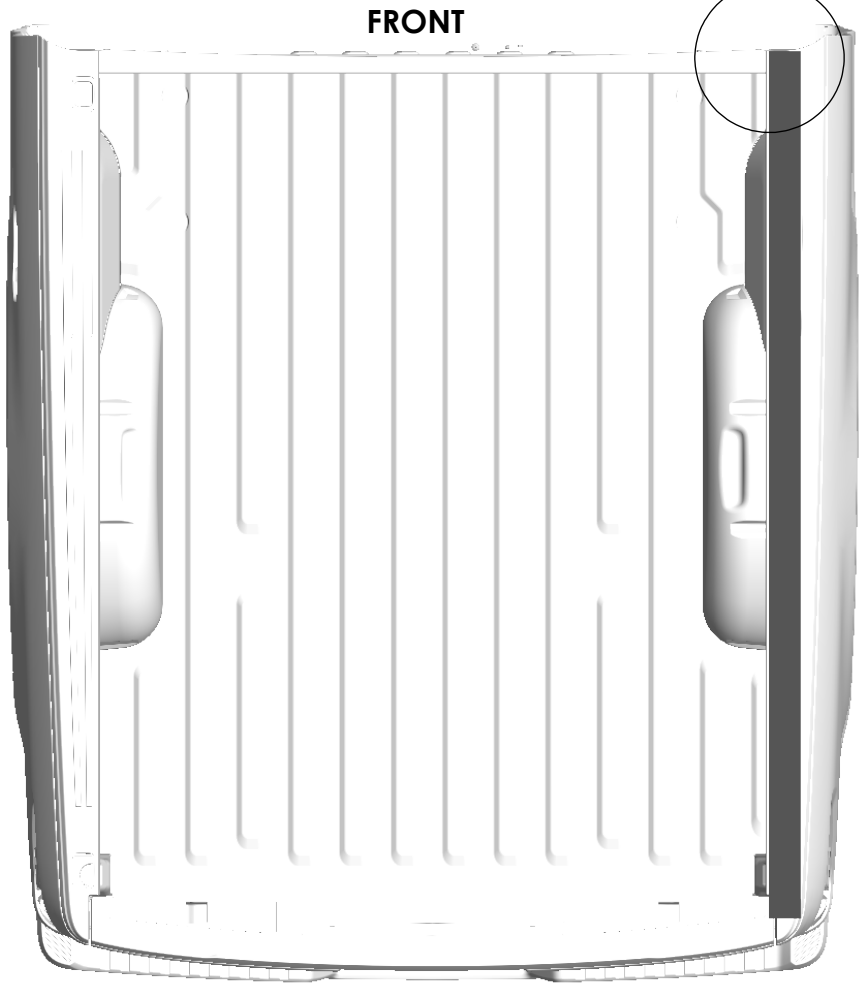


**TABLE 1:**

| VEHICLE PLATFORM | DIST. |
|---|---|
| F-150 | .875" |
| SILVERADO | 0.25" |
| RAM | .15" |

# STEP 8.3 CONTINUED - INSTALL FOAM (NOTE: FOR CHEVY COLORADO ONLY)

**Step 8.3A**
**COLORADO ONLY! CUT 74471 IN HALF TO MAKE TWO SEALS. INSTALL ADDITIONAL SIDE BED SEALS (74471 (X1)). ALIGN TO THE FRONT AND INSIDE EDGES OF THE SEALS FROM THE PREVIOUS STEP.**

**DO NOT TRIM EXCESS UNTIL TOPPER IS ON THE TRUCK.**

**Step 8.3B**
**SHIFT TO DRIVERS SIDE OF TRUCK AND MIRROR INSTALLATION OF THE FIRST HALF OF 74471.**

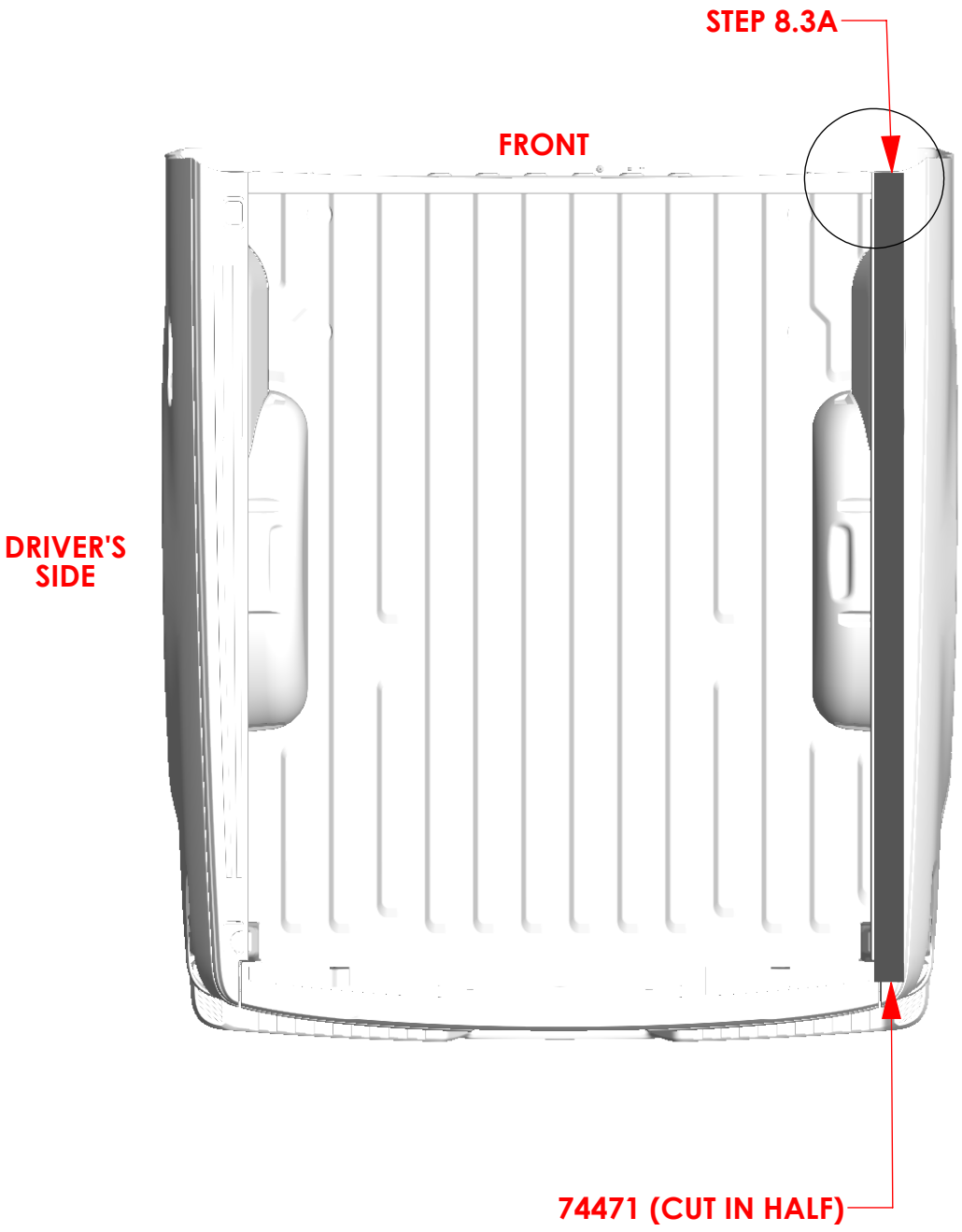

## *STEP 8 - ATTACH SEALS TO TRUCK BED (NOTE: FOR CHEVY SILVERADO ONLY)*

**Step 8.4**
**PLACE 81456 GASKET IN THE GAP BETWEEN THE TRUCK BED AND CAB.**

**BEFORE ATTACHING TO TRUCK BED, CLEAN AND PREP AREA. DO NOT ATTACH TO PLASTIC TRIM. IF TRIM IS ON FRONT OF BED ATTACH TO CAB.**

**ONCE AREA IS PREPARED CENTER GASKET ON THE REAR WINDOW.**

**MAKE SURE THAT GASKET HAS FULL SURFACE CONTACT SO ADHESIVE WILL PROPERLY BOND.**

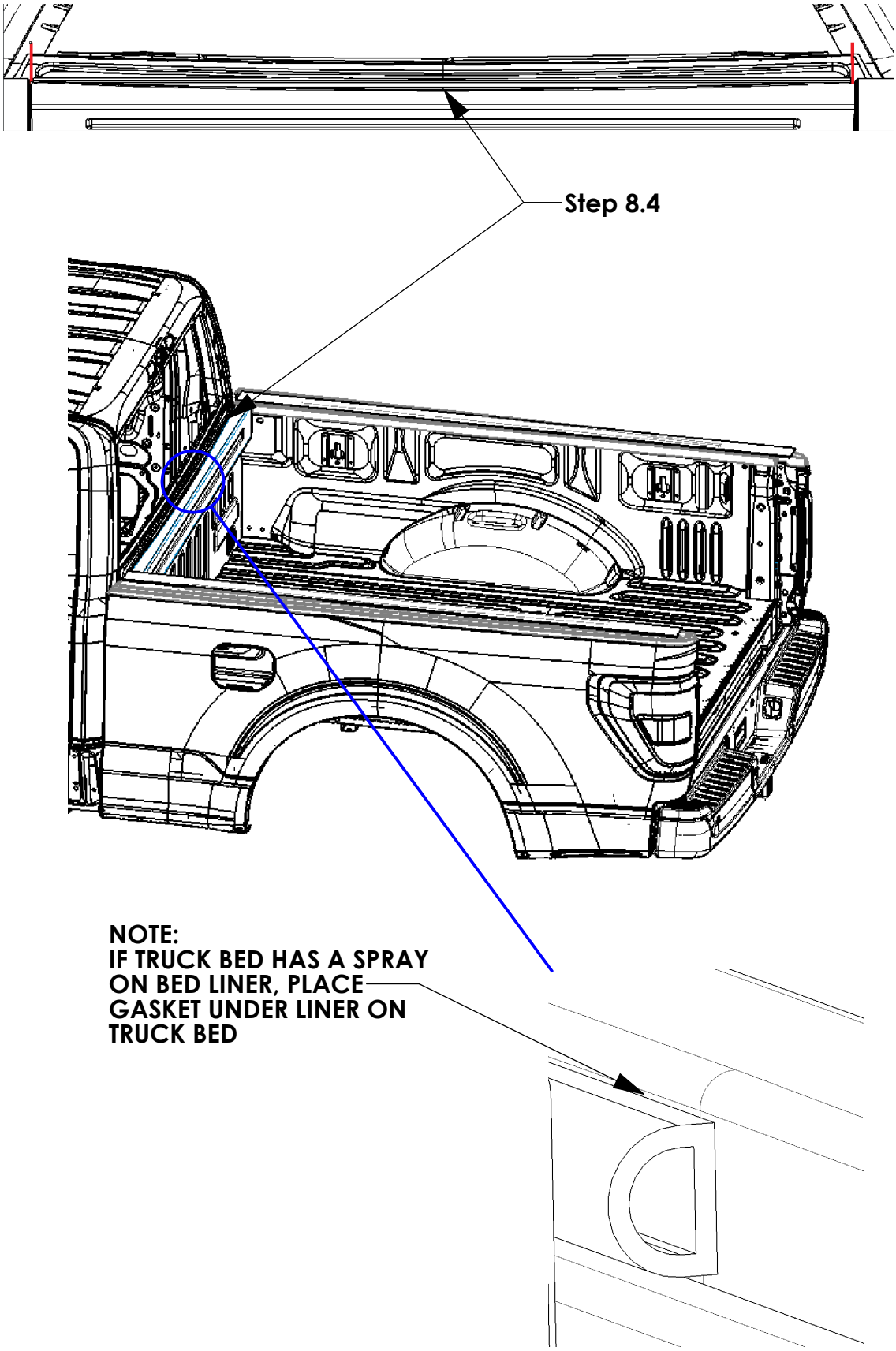

# STEP 9A - INSTALL FOAM & 73740 SEALANT TO TRUCK CAB AND BED SEAMS *(NOTE: FOR CHEVY SILVERADO ONLY)*

**STEP 9A.1**
**CUT A 2.5" FOAM PIECE OF 73398, INSERT UNDER TRIM OF THE BED RAIL, GOING INTO THE GAP AS SHOWN**

**STEP 9A.2**
**INSERT A 2ND FOAM OF THE SAME DIMENSION INTO THE GAP, PERPENDICULAR TO THE ONE IN STEP 9.1, BOTH PIECES SHOULD BE TOUCHING**

**STEP 9A.3**
**SECURE BOTH PIECES OF FOAM IN PLACE WITH 3M SEALANT AROUND THE PERIMETER AND FILL ANY REMAINING GAPS, REPEAT ON PASSENGER SIDE**

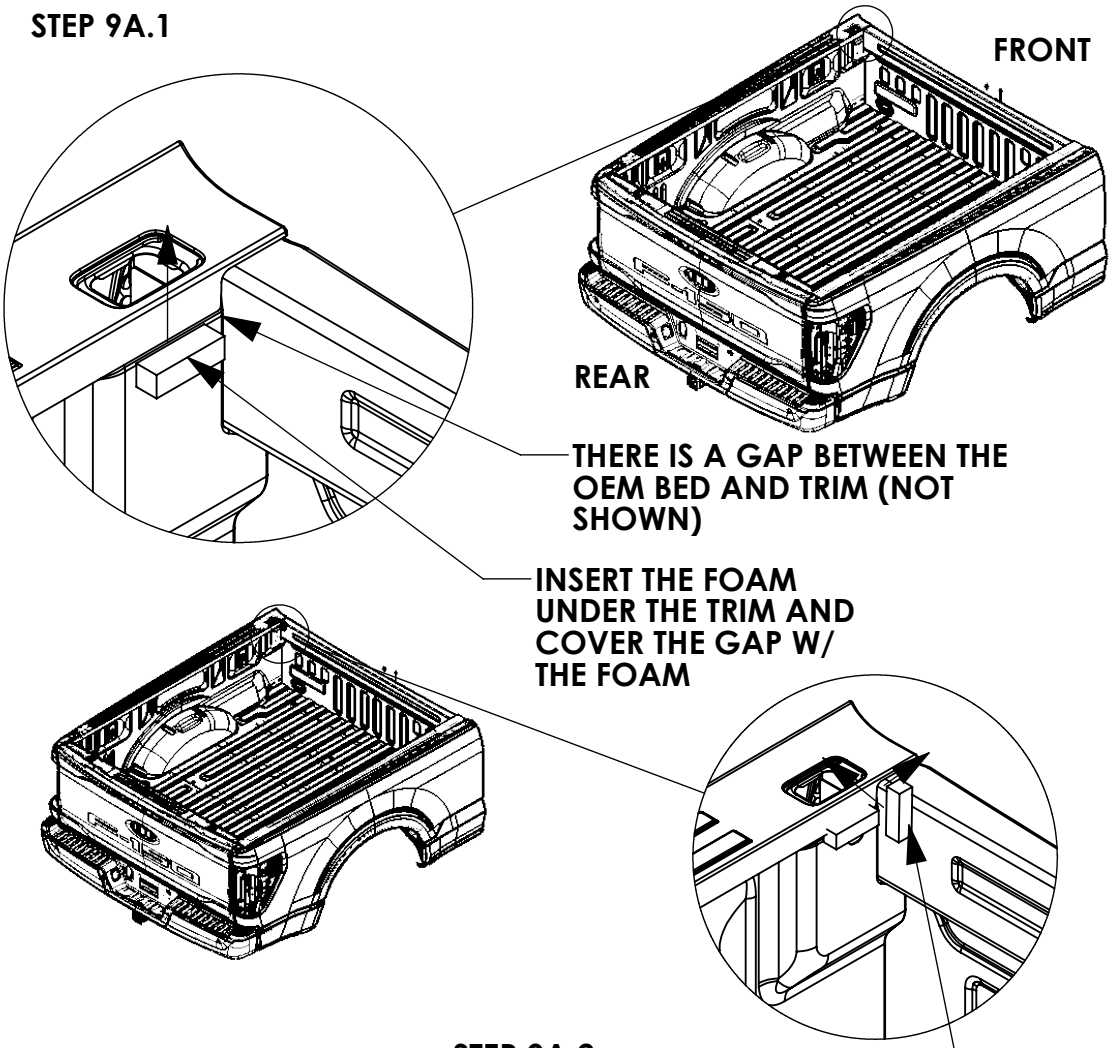

**STEP 9A.3**

**ADD 3M SEALANT AROUND THE PERIMETER OF THE FOAMS, BETWEEN THE RAIL TRIM & THE BED, & REPEAT ON PASSENGER SIDE**

# STEP 9B - INSTALL FOAM TO TRUCK CAB AND BED SEAMS (NOTE: FOR CHEVY SILVERADO EV ONLY)

**STEP 9B.1**
PLACE FOAM AROUND TOP OF BED RAILS, STRIPS WILL BUTT UP AGAINST EACH OTHER AT CORNERS

**STEP 9B.2**
WHEN PLACING TOPPER ON BED, TOPPER WILL NEED TO BE BROUGHT IN LOW AND THEN MOVED FORWARD TO FIT INSIDE TRUCK TRIM. (AS SHOWN)

**STEP 9B.3**
WITH TOPPER IN PLACE EXCESS TRIM

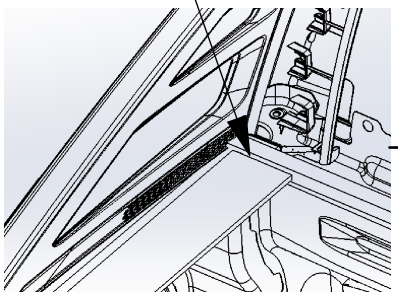


NOTE:
LOCATE DRAIN HOLES AND TRIM FOAM AROUND THEM, TO MAKE SURE HOLES AREN'T BEING BLOCKED

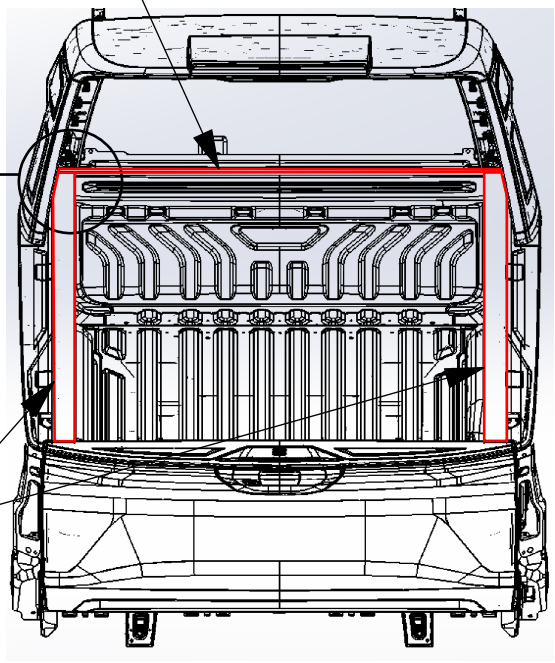


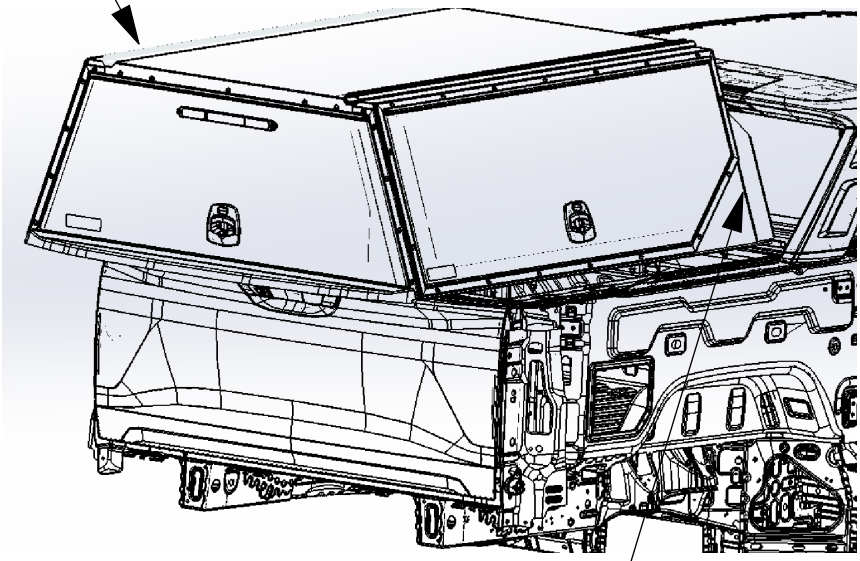


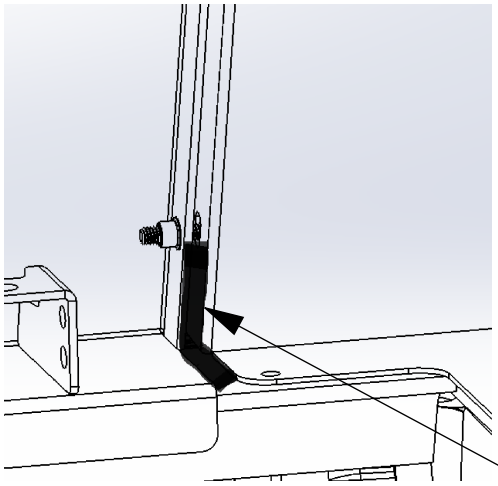

NOTE:
WHEN TOPPER IS IN PLACE USE SLICONE INSIDE OF TOPPER TO SEAL GAPS AT FRONT OF TOPPER . (AS SHOWN)

# STEP 9C - INSTALL FOAM, (6) SPACER & 73740 SEALANT TO TRUCK CAB AND BED SEAMS (NOTE: FOR FORD RANGER ONLY)

**STEP 9C.1**
**REMOVE PLUGS LOCATED ON THE TRUCK BED RAIL,**

**STOP**

**DO NOT DRILL INTO THE RAIL**

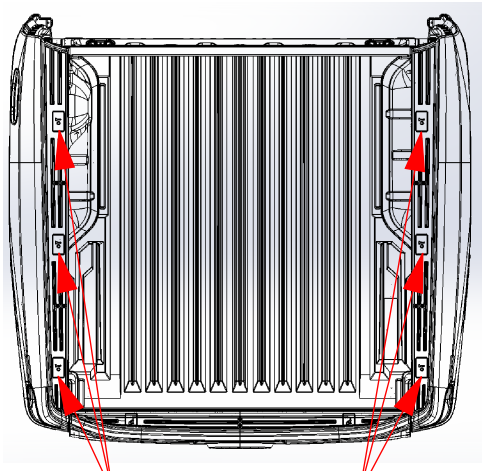


**STEP 9C.2**
**CENTER (6)SPACERS OVER HOLE, TAPE SPACER TO HOLD IT IN THE LOCATION**

**NOTE:**
**TALL SPACERS TO BE USED WITH 2025 MODELS,**

**SHORT SPACERS TO BUT USED WITH 2026 OR NEWER MODELS**

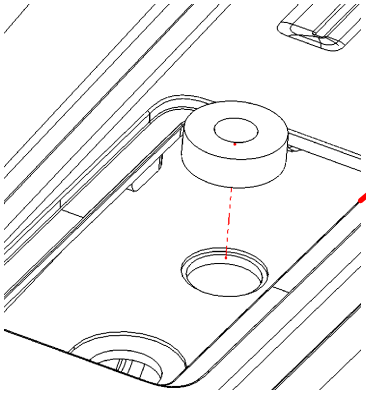

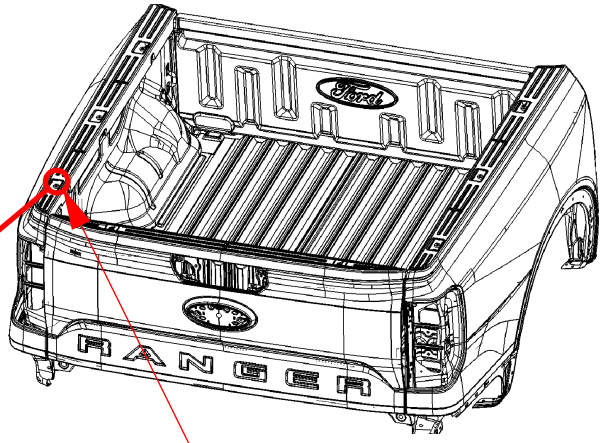


**STEP 9C.3**
**PLACE FOAM AROUND TOP OF BED RAILS, STRIPS WILL BUTT UP AGAINST EACH OTHER AT CORNERS**

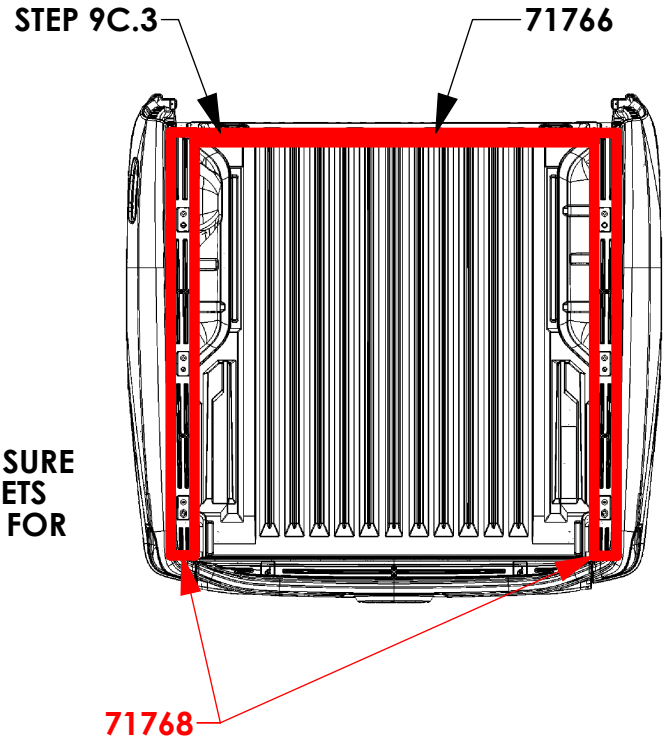


**STOP**

**NOTE:**
**BEFORE INSTALL PREP IS STARTED,**
**IF RANGER MODEL YEAR IS 2024, MAKE SURE THAT LOAD BOX REINFOREMENT BRACKETS HAVE BEEN INSTALLED. SCAN QR CODE FOR DOCUMENTED DIRECTION**

# STEP 9C - INSTALL FOAM, (6) SPACER & 73740 SEALANT TO TRUCK CAB AND BED SEAMS (NOTE: FOR FORD RANGER ONLY)

**STEP 9C.4**
**SLIDE 80670 & 80671 UNDER TRIM AT FRONT CORNERS OF BED TO MOUNT TO OEM HOLES, FULLY TIGHTEN (6)FAS0329, (6)FAS0552, & (6)FAS0588**

**M8 SOCKET DRILL**

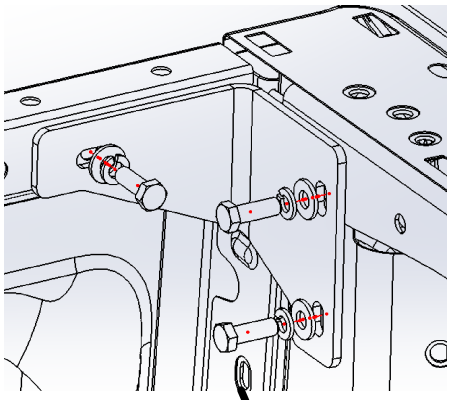

**NOTE:**
**TRIM IS NOT VISIBLE FOR CLARITY**

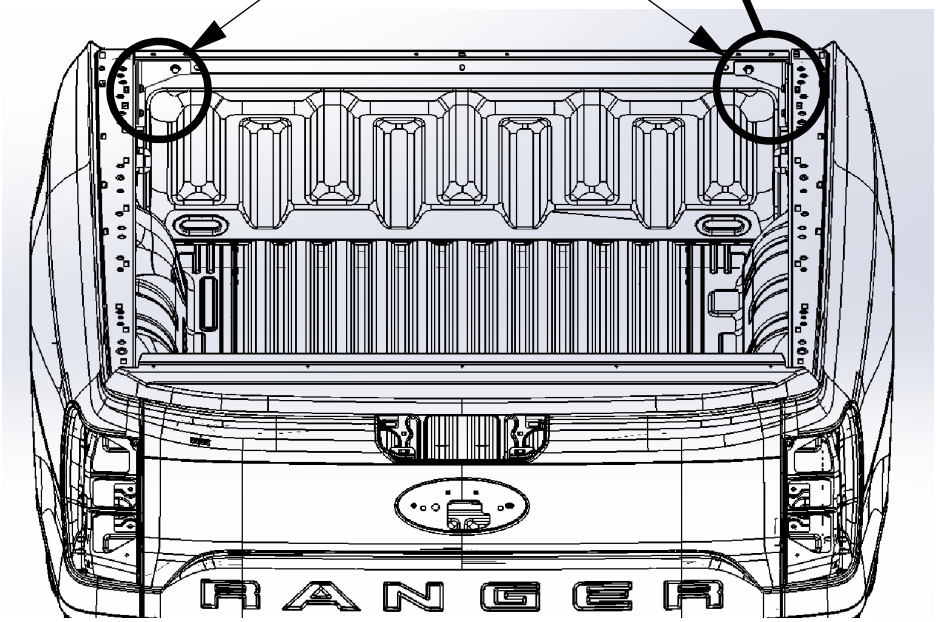


**NOTE:**
**BEFORE INSTALL PREP IS STARTED, IF RANGER MODEL YEAR IS 2024, MAKE SURE THAT LOAD BOX REINFOREMENT BRACKETS HAVE BEEN INSTALLED. SCAN QR CODE FOR DOCUMENTED DIRECTION**

## STEP 10 - ATTACH TOPPER TO TRUCK BED

**NOTE: (FOR 8.0' 26" TALL RAM 1500, 2500, 3500 ONLY) TOPPER MUST BE SOFT INSTALLED TO MARK FOR DRILLING. TOPPER TO BE REMOVED PRIOR TO DRILLING.**

**Step 10.1**
**SET TOPPER ONTO TRUCK BED. ALIGNMENT IS BASED OFF OF THE TAILGATE CLEARANCE CUTOUT IN THE SIDE BED RAILS (FOR FORD ONLY) AND PLACE ON THE PREVIOUSLY INSTALLED FRONT BED SEAL STEP 8.1**

**THESE 2 FACES SHOULD BE ALIGNED.**

**NOTE: IT IS RECOMMENDED THAT YOU LOAD THE TOPPER ONTO A TRUCKBED WITH ONE OF THE FOLLOWING METHODS:**

**-HOIST: ATTACH TO THE ROOF RAILS OF THE TOPPER**
**-FORKLIFT: OPEN THE REAR DOOR AND SET FORKS ON THE ROOF BOWS**
**-MANUAL: HAVE 1 INDIVIDUAL AT EACH CORNER OF THE TOP AND CARRY OVER THE SIDES OF THE TRUCK. DO NOT SCRATCH THE VEHICLE.**

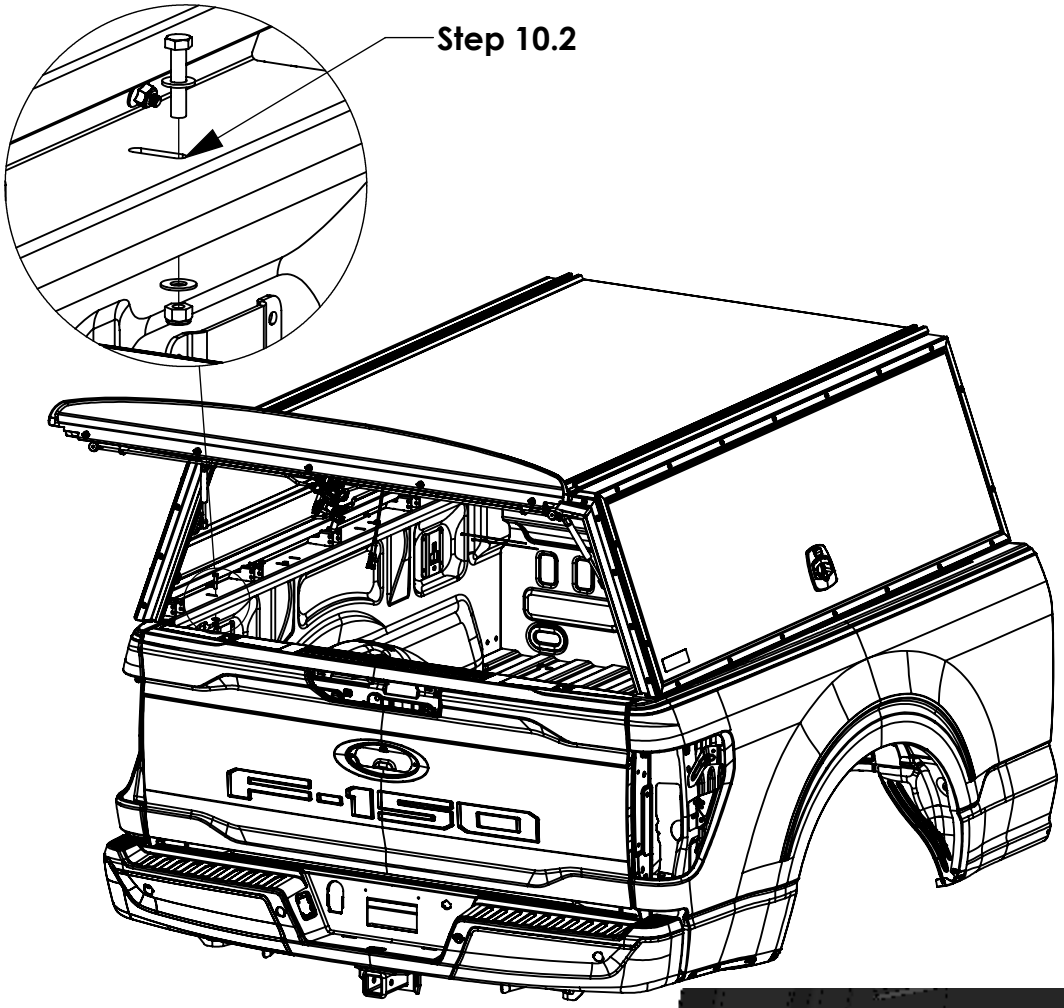


**Step 10.2**
**USE HOLES IN THE BED RAIL TO MARK AND DRILL MOUNTING LOCATIONS. IT IS NOT NECESSARY TO REMOVE THE TOPPER FOR THIS STEP.**

**(8 PLACES)**
**11/32" DRILL BIT**

**NOTE: IF THESE HOLES INTERFERE WITH THE OEM BODY, DRILL A NEW HOLE IN THE BED RAIL +/- 2" FROM THE INTERFERENCE.**

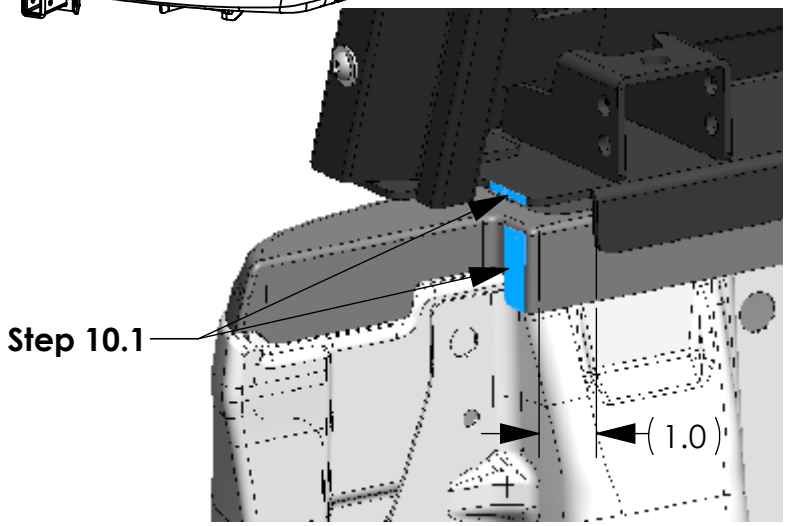

## STEP 10 ALT- ATTACH TOPPER TO TRUCK BED

STOP NOTE: (FOR 5.0' FORD RANGER ONLY) TOPPER MUST BE SOFT INSTALLED TO MARK FOR DRILLING. TOPPER TO BE REMOVED PRIOR TO DRILLING.

**Step 10.1 ALT**
SET TOPPER ONTO TRUCK BED. ALIGNMENT IS BASED OFF OF THE TAILGATE CLEARANCE CUTOUT IN THE SIDE BED RAILS (FOR FORD ONLY) AND PLACE ON THE PREVIOUSLY INSTALLED FRONT BED SEAL STEP 8.1

THESE 2 FACES SHOULD BE ALIGNED.

NOTE: IT IS RECOMMENDED THAT YOU LOAD THE TOPPER ONTO A TRUCKBED WITH ONE OF THE FOLLOWING METHODS:

-HOIST: ATTACH TO THE ROOF RAILS OF THE TOPPER
-FORKLIFT: OPEN THE REAR DOOR AND SET FORKS ON THE ROOF BOWS
-MANUAL: HAVE 1 INDIVIDUAL AT EACH CORNER OF THE TOP AND CARRY OVER THE SIDES OF THE TRUCK. DO NOT SCRATCH THE VEHICLE.

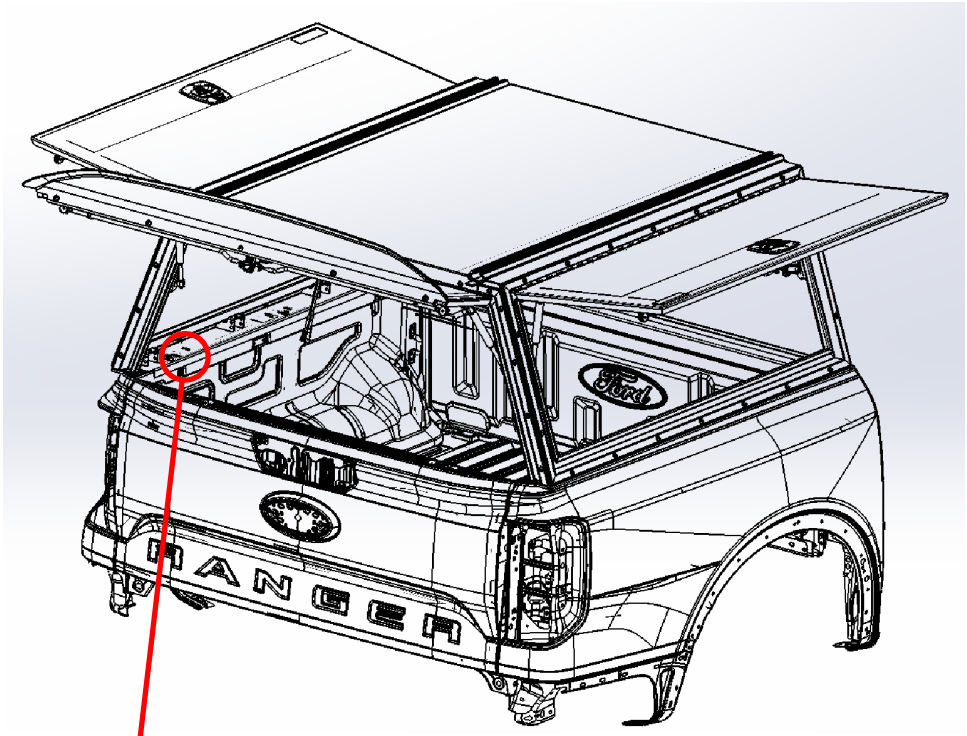


**Step 10.2 ALT**
USE HOLES IN THE BED RAIL TO MARK AND DRILL MOUNTING LOCATIONS. IT IS NOT NECESSARY TO REMOVE THE TOPPER FOR THIS STEP.

(8 PLACES)
11/32" DRILL BIT

STOP

NOTE: IF THESE HOLES INTERFERE WITH THE OEM BODY, DRILL A NEW HOLE IN THE BED RAIL +/- 2" FROM THE INTERFERENCE.

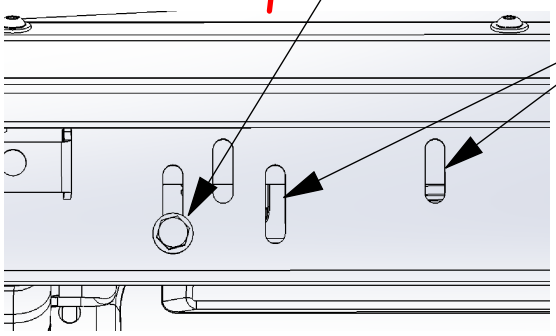


NOTE:
OUTER SLOTS ARE TO BE USED WITH 2026 FORD RANGER INNER AND SMALLER SLOTS TO BE USED WITH 2025 FORD RANGER

NOTE:
OVERHEAD VIEW FOR CLARITY

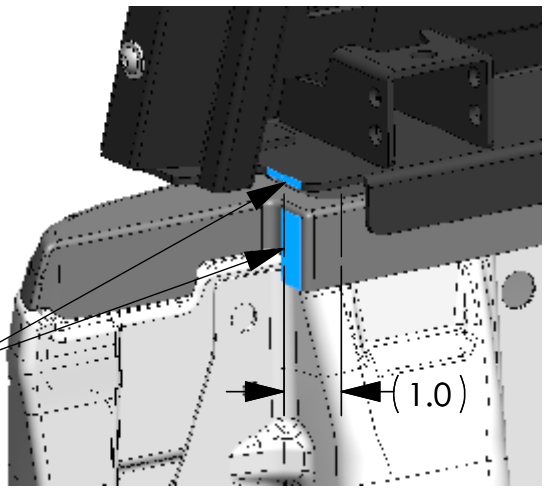

## *STEP 10 - ATTACH TOPPER TO TRUCK BED*

**NOTE: (FOR 8.0' 26" TALL RAM 1500, 2500, 3500 ONLY) TOPPER MUST BE SOFT INSTALLED TO MARK FOR DRILLING. TOPPER TO BE REMOVED PRIOR TO DRILLING.**

**Step 10.3**
**USING THE HOLES YOU JUST DRILLED OUT, FASTEN THE TOPPER TO THE TRUCK BED.**
**FAS0242,**
**FAS0552 [x2],**
**FAS0248**

**(8 PLACES)**
**1/2" SOCKET**
**1/2" WRENCH**

**Step 10.4**
**ADD TO BOTH SIDES SILICONE BETWEEN FRONT PANEL GAP AND BED RAIL, AND REAR OF TOPPER.**

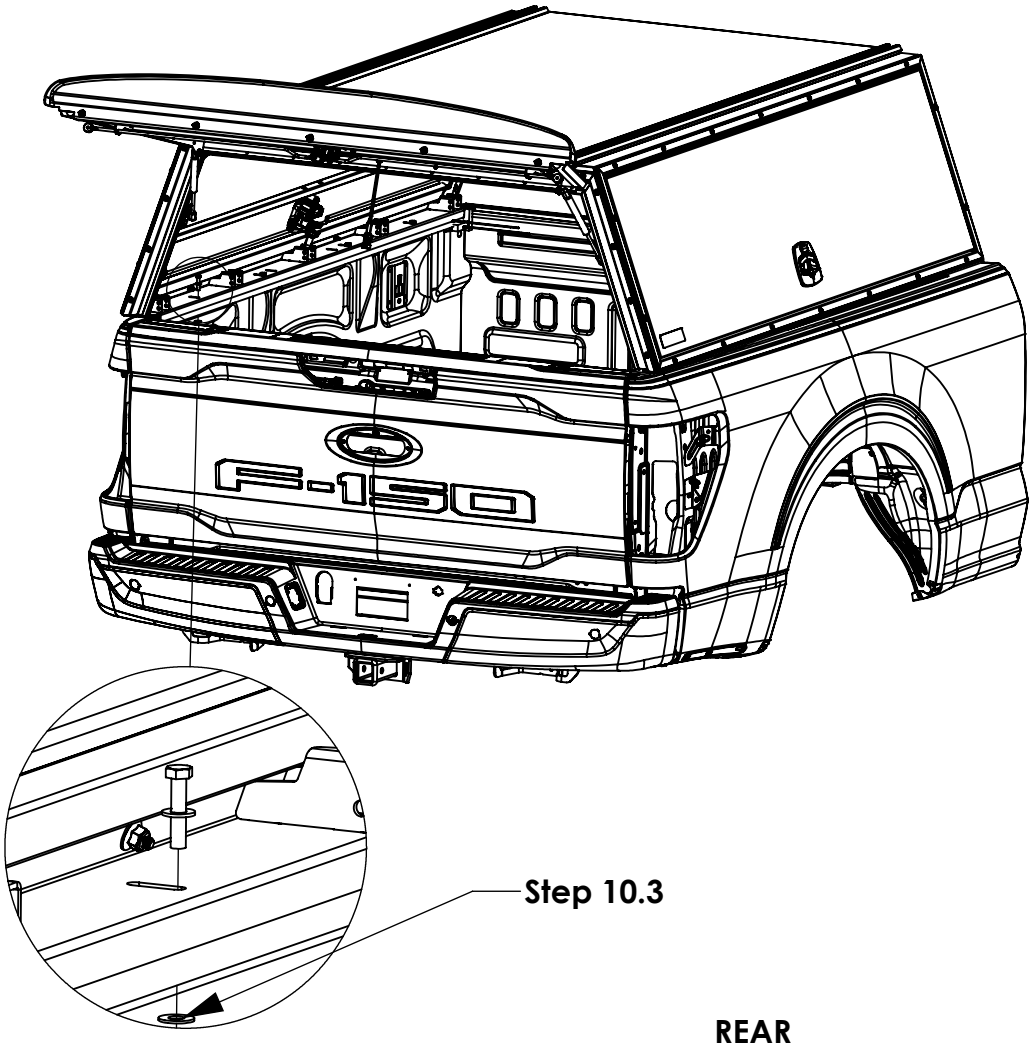


**FRONT**

**Step 10.4**

**REAR**

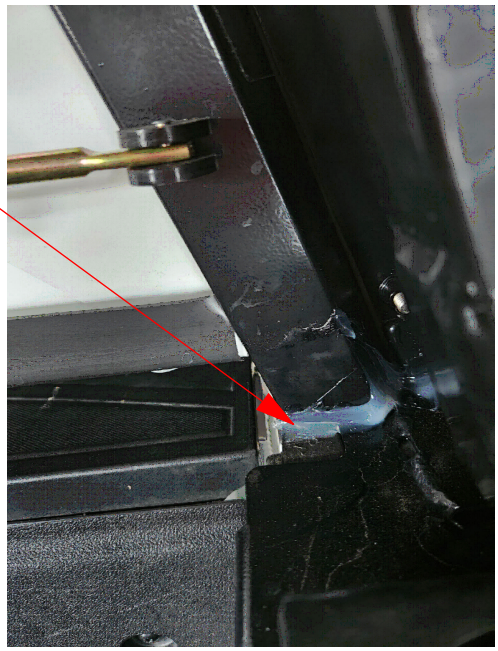

**MAKE SURE ALL FASTENERS ARE TIGHTENED!! INSTALLATION IS COMPLETE**

## *STEP 10 (CON'T) - ATTACH TOPPER TO TRUCK BED*

***NOTE: THIS STEP IS FOR COLORADO TOPS ONLY***

**Step 10.4B**
**ONCE TOPPER IS BOLTED TO BED RAILS, APPLY SILICONE (26618-0) TO LOWER INSIDE CORNERS OF THE TOPPER CLOSEST TO THE CAB, SEALING THE GAP TO THE BED RAIL.**

**NOTE: IMAGES SHOW BLACK SEALENT, SILICONE PROVIDED WILL BE CLEAR.**

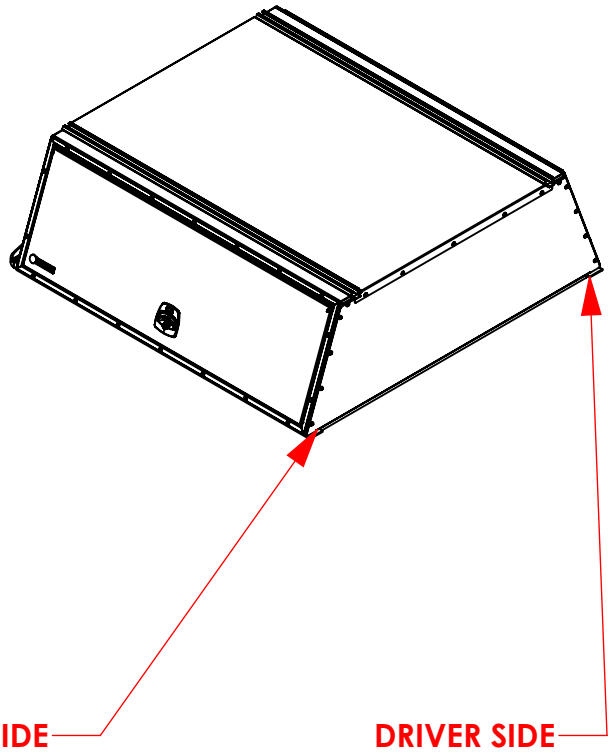


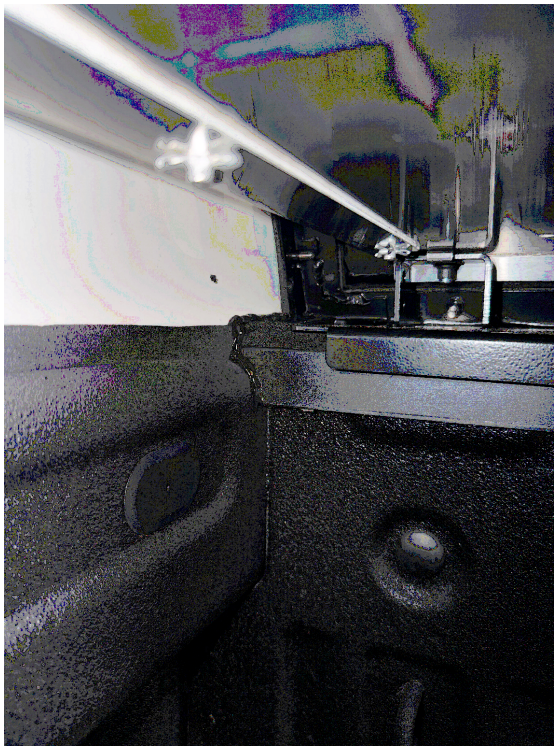

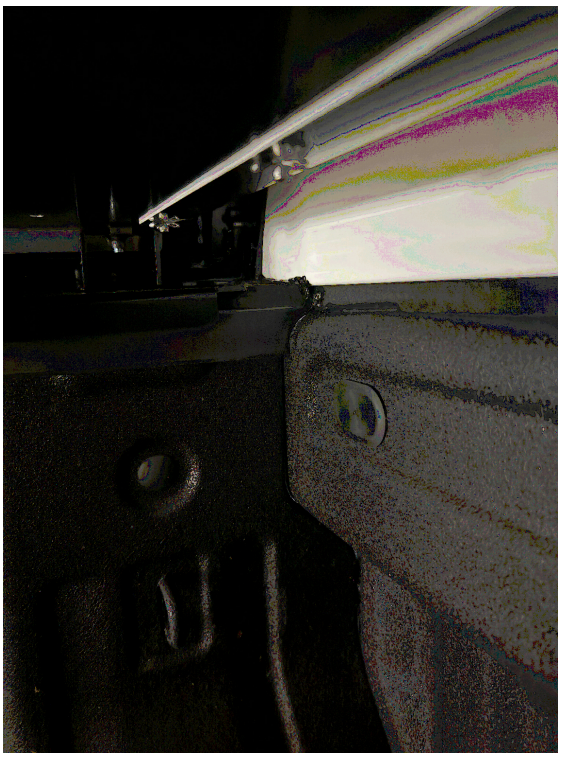

**MAKE SURE ALL FASTENERS ARE TIGHTENED!! INSTALLATION IS COMPLETE**

## STEP 10 ( CON'T) - ATTACH TOPPER TO TRUCK BED

**NOTE: (FOR 8.0' 26" TALL RAM 1500, 2500, 3500 ONLY) TOPPER MUST BE SOFT INSTALLED TO MARK FOR DRILLING. TOPPER TO BE REMOVED PRIOR TO DRILLING.**

**Step 10.4**
**COLORADO TOPPER. ALIGNMENT IS BASED OFF OF THE TAILGATE AND THE SIDE BED RAILS.**

**THESE 2 FACES SHOULD BE ALIGNED.**

**NOTE: IT IS RECOMMENDED THAT YOU LOAD THE TOPPER ONTO A TRUCKBED WITH ONE OF THE FOLLOWING METHODS:**

**-HOIST: ATTACH TO THE ROOF RAILS OF THE TOPPER**
**-FORKLIFT: OPEN THE REAR DOOR AND SET FORKS ON THE ROOF BOWS**
**-MANUAL: HAVE 1 INDIVIDUAL AT EACH CORNER OF THE TOP AND CARRY OVER THE SIDES OF THE TRUCK. DO NOT SCRATCH THE VEHICLE.**

**Step 10.5**
**USING THE HOLES YOU JUST DRILLED OUT, FASTEN THE TOPPER TO THE TRUCK BED.**
**FAS0242, FAS0552 [x2], FAS0248**

**(6 PLACES)**
**1/2" SOCKET**
**1/2" WRENCH**

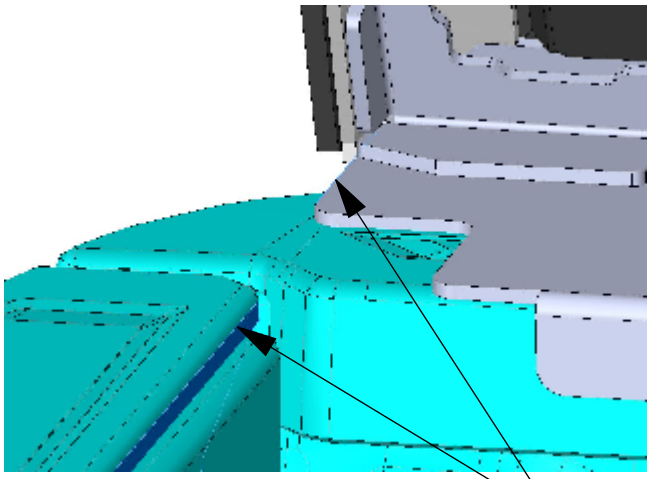

**Step 10.4 IN LINE**

**STEP 10.5 INSIDE SLOTS FOR THE COLORADO**

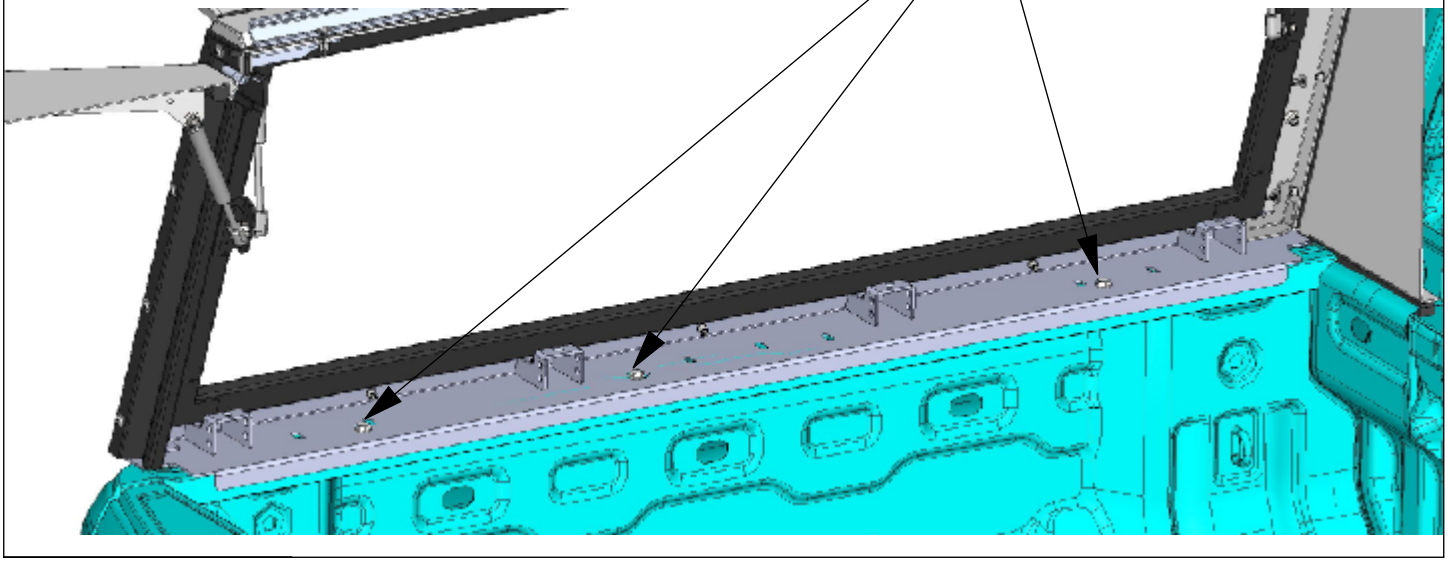

**MAKE SURE ALL FASTENERS ARE TIGHTENED!! INSTALLATION IS COMPLETE**

## Introduction / Comments:

Install Instructions For Brake Light On Topper For F150 (5.5'/6.5' & 8')

### Note:

Read all instructions prior to installation. Review the Adrian Steel **GENERAL PRECAUTIONS PAGES (56638**) before attempting installation. Only personnel familiar with using electrical best practices should perform this install. Reference **ELECTRICAL BEST PRACTICES MANUAL (54479)** before attempting installation.

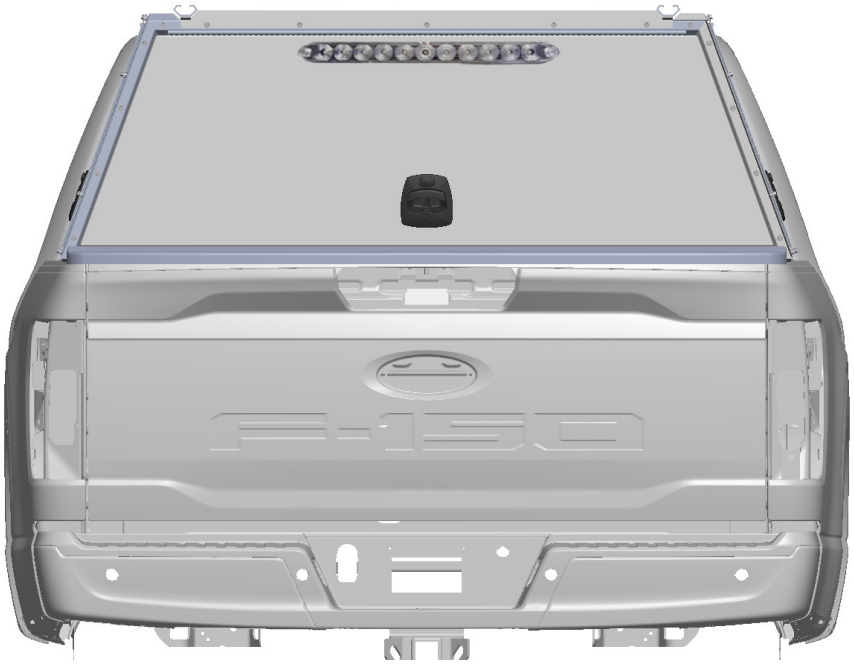

# Installation Instructions For Brake Light On Topper For F150 (5.5'/6.5' & 8')

# Routing Overview

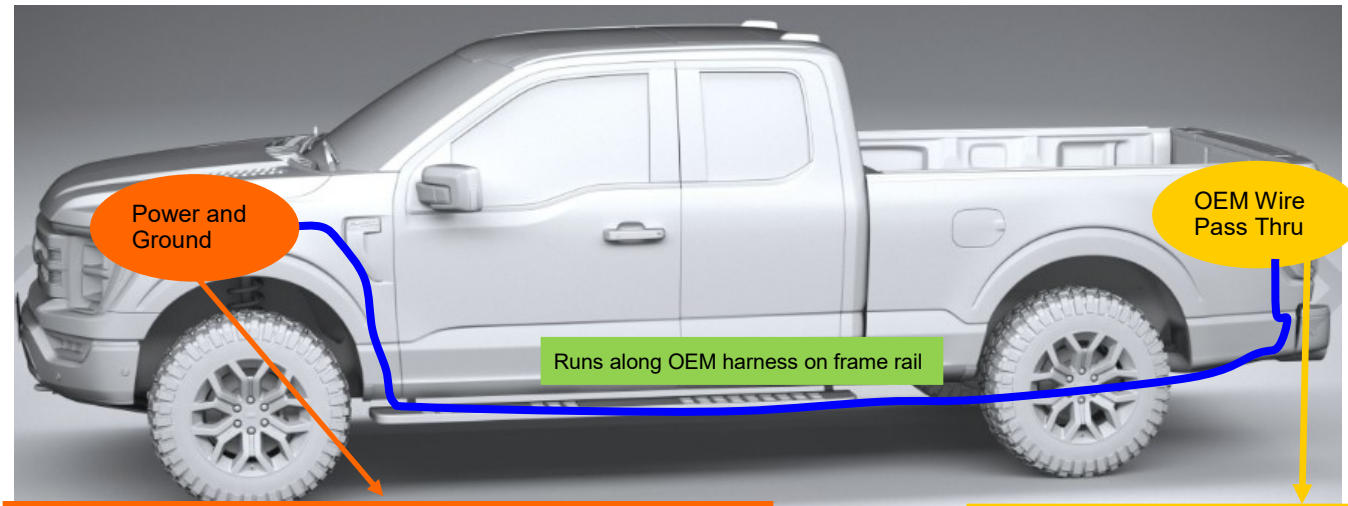

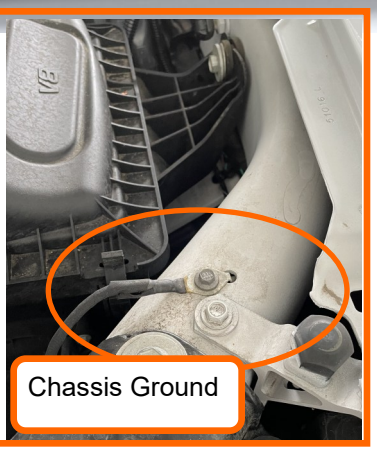


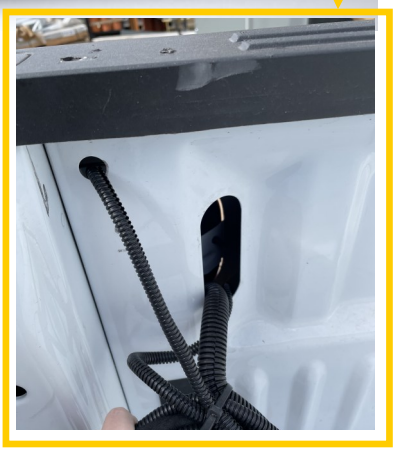

| Color | Key - Items |
|---|---|
| Orange | Power and Ground Location |
| Blue | Harness Routing |
| Yellow | Bed Wire Pass Thru |

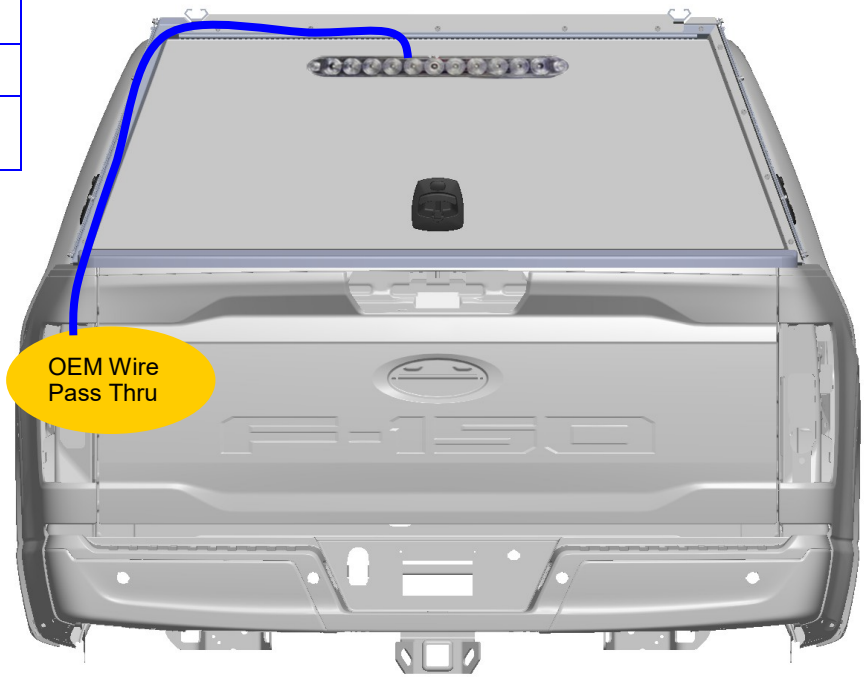

**Step 1:** Locate the brake light harness 71668.

Remove the fuse from the inline fuse holder until the end of the install.

**Step 2:** Open the vehicle hood.

Locate the driver's side frame OEM harness. Follow the harness forward of the truck, until you reach the hood shock area.

There will be a small grey/orange wire separate from the OEM harness. It will have a black covering on the end.

*** Please note the Hybrid F150 may have a green/purple wire instead of grey/orange.

This is the OEM CHMSL circuit wire for the brake light.

Strip the wire covering and prepare it to be connected to the brake light harness.

Locate the end of the harness (PN71668) with the ring terminal and butt connector.

Use the butt connector to connect to the OEM CHMSL wire. Use a heat gun to shrink the butt connector once crimped on.

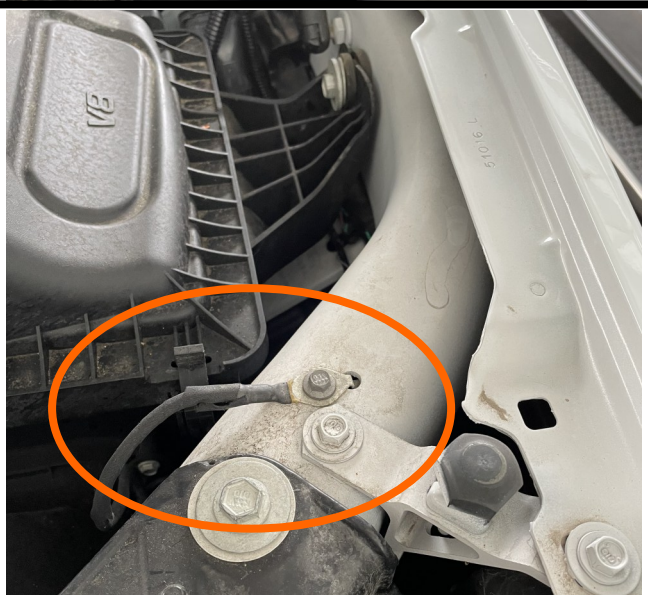

**Step 3:** Locate the OEM chassis ground located on the frame—forward of the CHMSL circuit.

Secure the ring terminal on the brake light harness to the chassis ground.

Torque the ground to 9Nm (80 in lb).

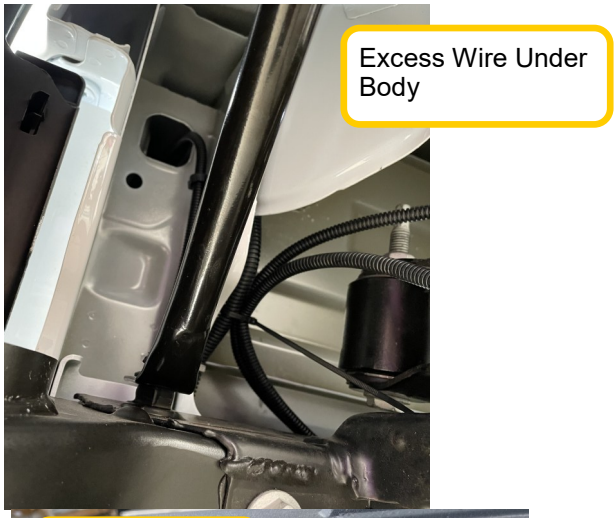

**Step 4: Routing (Refer to routing diagrams at the beginning of the instructions)**

Route the brake light harness rearward and down the engine compartment to the frame (red dotted line).

Follow the OEM wire harness on the frame rearward to the bumper of the truck.

Continue routing the harness upward in the bed cavity, to the bed wire pass thru.

Drill a hole in the OEM grommet, for the pass thru. If the grommet has a light in place of it, please utilize the round hole that is up and to the right of it.

If installing the interior lighting kit as well as the brake light kit, utilize the larger grommet supplied in the brake light harness bag.

If only installing the brake light harness, utilize the smaller grommet supplied in the brake light harness kit.

Drill (for larger grommet a 1” hole and 0.625” (5/8) hole for the smaller grommet) then route the wire harness through the grommet, to the underbody of the truck.

Silicone after routing through the grommet.

Tuck any excess wiring into the empty cavity underneath the bed frame.

For **REV B** of the harnesses there will be a tek screw and p-clip supplied in the bag.
Bundle the excess wire in the cavity using zip ties. Use the tek screw and p-clip to secure the bundle to the frame.

Secure the wiring with zip ties.

**DO NOT secure wiring to any brake lines.**

Be sure the bundle of wire is secure and will not fall out over time.

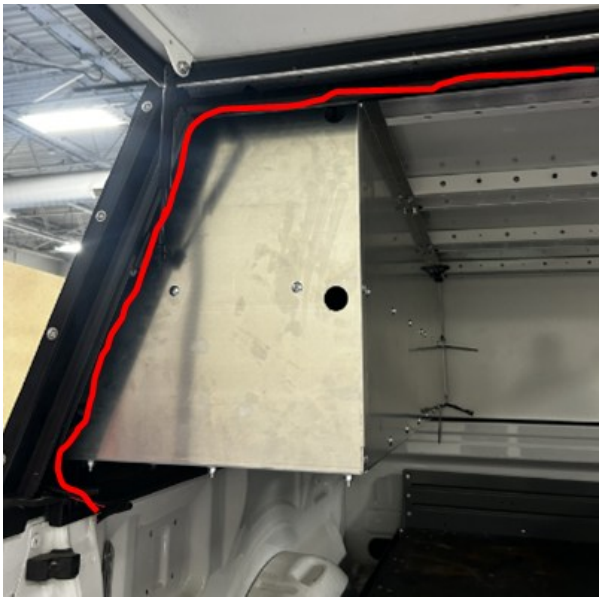

**Step 5: Routing continued**
Continue routing the brake light harness inside the topper, to the light.

The harness should run along the driver's side rear cavity, then across the top cavity to the light. (Red and blue lines shown in pictures

Be sure to leave extra wire from the brake light to the topper rails before securing. This ensures the wires wont brake when the topper door opens and closes.

Secure harness using stud mount zip ties.

**Connect the harness to the light:**
Plug the connectors together. Pull connectors lightly to ensure they do not come apart.

Be sure the red wire on the harness connects to the black wire on the light. Then the black wire on the harness connects to the white wire on the light.

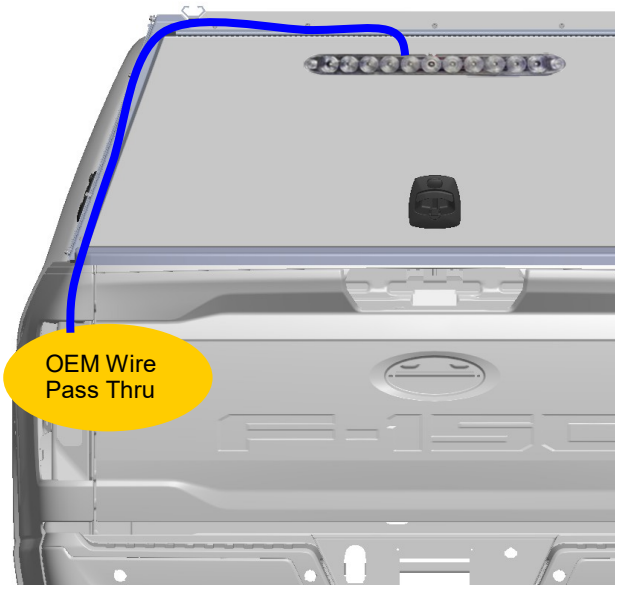


**Insert the fuse into the inline-fuse holder on the brake light harness.**

**The install is now complete.**

**Check that the brake light comes on when the brake pedal is pushed, then back off once pedal is released.**