ADRIAN STEEL
Cargo Management Solutions for Commercial Vehicles

ROOF RAIL KIT,TOPPER,74" UNICOVER

PRODUCT WEIGHT

10.77 LBS

WIDTH X DEPTH X HEIGHT

2.875" X 3.50" X 63.00"

CAPACITY

74"

COLOR

UNPAINTED

CATALOG NUMBER

RRKTOP74UC

PRODUCT FEATURES

THIS PORDUCT IS USED ON UNICOVER TOPPERS FOR TRUCK BEDS RANGING FROM 6' 2" - 6'10" . THESE RAIL KITS DO NOT INCLUDE Z BRACKETS AND BOLT DIRECTLY THROUGH THE RAILS INTO THE TOPPER SUPPORT PLATES.

THIS RAIL KIT WILL ALLOW OUT UTILITY RACKS, GRIP-LOCK RACKS, AND PROLIFT DROP DOWN RACKS TO BE INSTALLED ON THE UNICOVER TOPPER.

RAIL KITS FOR ALTERNATIVE BED SIZES LISTED BELOW. ENSURE ROOF RAIL ORDERED CORRESPONDS TO VEHILCES BED LENGTH.

Vehicle Platform	Bed Length	Bed Length (in)	Roof Rail Kit
Maverick	4'6"	54"	RRKTOP55UC
All	4'10" - 5'6"	58"-66"	RRKTOP58UC
All	5'7"-6'1"	67"-73"	RRKTOP67UC
All	6'2"-6'10"	74"-82"	RRKTOP74UC
All	8'+	96"+	RRKTOP96UC

SEE PAGE 2 FOR APPLICATION NOTES, ACCESSORIES AND OTHER PRODUCTS THAT WORK WITH THIS UNIT.

ADRIAN STEEL
Cargo Management Solutions for Commercial Vehicles

ROOF RAIL KIT,TOPPER,74" Unicover

CATALOG NUMBER **RRKTOP74UC**

PRODUCT APPLICATION

THIS PORDUCT IS USED ON TRUCK BEDS 6'2" - 6'10" WITH UNICOVER TOPPERS. THESE RAIL KITS DO NOT INCLUDE Z BRACKETS AND BOLT DIRECTLY THROUGH THE RAILS INTO THE TOPPER SUPPORT PLATES.

THIS RAIL KIT WILL ALLOW OUT UTILITY RACKS, GRIP-LOCK RACKS, AND PROLIFT DROP DOWN RACKS TO BE INSTALLED ON THE UNICOVER TOPPER.

ACCESSORIES THAT WILL WORK WITH THIS PRODUCT

CATALOG NUMBER	*DESCRIPTION (smart)*
2BARTOPW / B	2BAR UTILITY RACK, TOP
2BAR53W / B	2BAR,UTILITY RACK, 53"
2BARCW / B	2BAR UTILITY RACK, CV
MAVRMBK4W / B	MAV RAIL MNT BKT KT,4
GL-CVDSW / B	GRIP-LOCK,COMPACT VAN DS
GL-CVPSW / B	GRIP-LOCK,COMPACT VAN PS
PLMDDSLT5W /B	PROLIFT,MAX,DS,LOW T,5
PLMDDSMT5W /B	PROLIFT,MAX,DS,MID T,5
PLMDPSLT5W /B	PROLIFT,MAX,PS,LOW T,5
PLMDPSMT5W /B	PROLIFT,MAX,PS,MID T,5
PLSDDSLT5W /B	PROLIFT,STD,DS,LOW T,5
PLSDPSLT5W /B	PROLIFT,STD,PS,LOW T,5

The information contained in this document is the sole property of ADRIAN STEEL COMPANY. ADRIAN STEEL COMPANY retains the right to modify and/or change the product of its design at any time with prior notification.

INSTR. NUMBER : 73049	PG: 1	REV: A

PART NUMBER : RRKTOP67UC, RRKTOP74UC, RRKTOP96UC

PART DESC. :
- ROOF RAIL KIT,TOPPER,67"
- ROOF RAIL KIT,TOPPER,74"
- ROOF RAIL KIT,TOPPER,96"

ITEM NO.	PART NUMBER	DESCRIPTION	RRKTOP67UC	RRKTOP74UC	RRKTOP96UC
1	73023	RAIL, 32.00	2	-	-
2	73024	RAIL, 35.00	2	2	-
3	73025	RAIL, 39.00	-	2	-
4	66056	UTILITY,TOP SUPPORT PLATE	4	4	4
5	73026	RAIL, 48.00	-	-	4

NOTE: THIS INSTRUCTION IS VALID FOR THE FOLLOWING KITS:

- **RRKTOP67UC (SHOWN)**
- **RRKTOP74UC**
- **RRKTOP96UC**

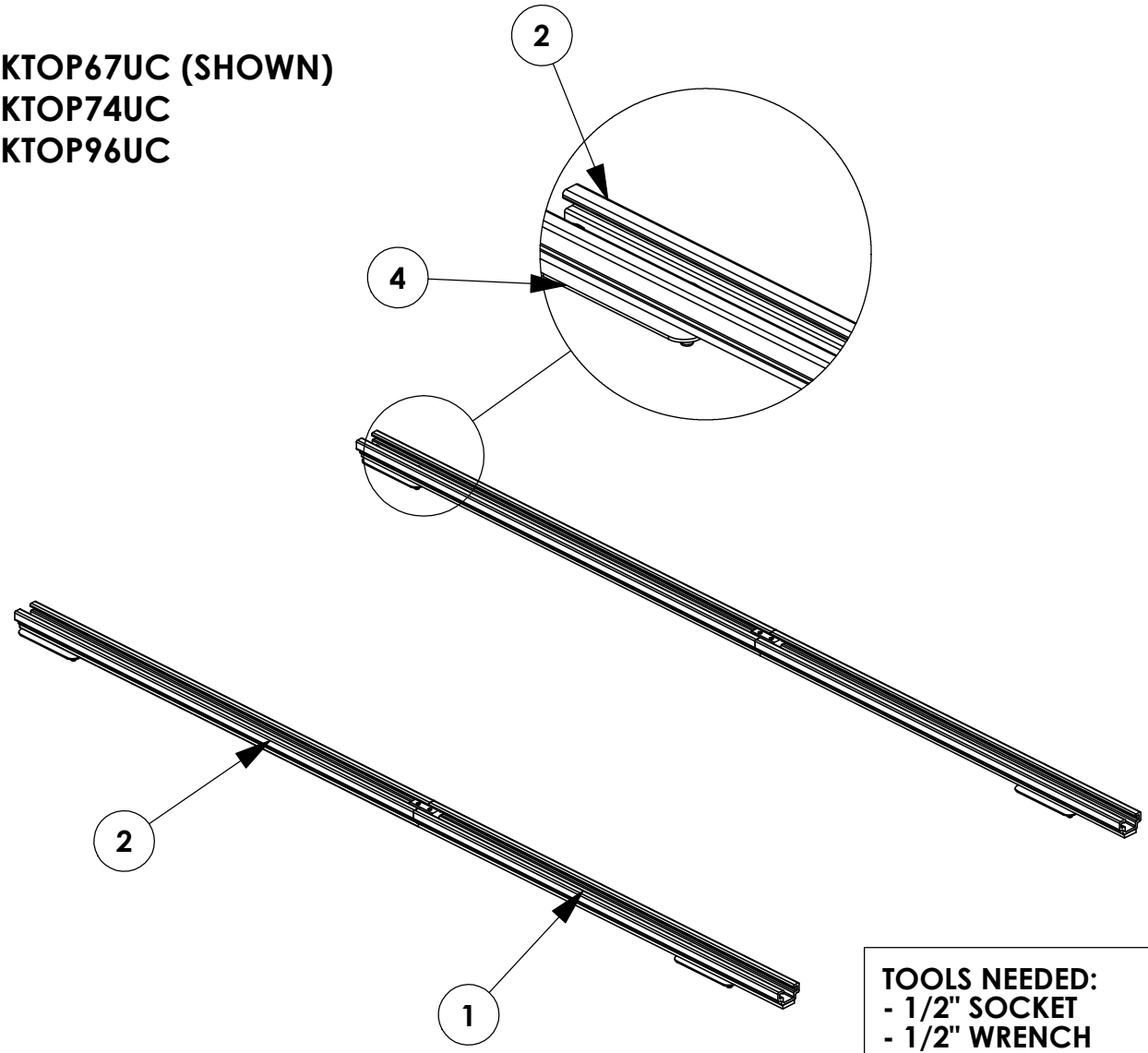

TOOLS NEEDED:
- **1/2" SOCKET**
- **1/2" WRENCH**
- **5/32" ALLEN WRENCH**
- **DRILL**
- **IMPACT DRIVER**

BEST PRACTICES

GET TO KNOW THE VEHICLE - AT THE BEGINNING OF ANY INSTALLATION, CHECK THE LOCATION OF THE FUEL TANK, FUEL LINES, BRAKE LINES, HIGH VOLTAGE BATTERIES AND WIRING HARNESSES TO AVOID INJURY OR PROPERTY DAMAGE FROM TOOL CONTACT.

SEAL ALL EXTERIOR HOLES - ALL INSTALLATION HOLES SHOULD BE SEALED WITH BUTYL TAPE OR SILICON TO PREVENT WATER AND EXHAUST GASES FROM ENTERING THE VEHICLE.

CONTROL DRILL DEPTH - TO AVOID DAMAGE TO THE VEHICLE, USE A DRILL STOP OR CLEARED STEP BIT WHEN DRILLING INSTALLATION HOLES.

ALWAYS ADD PRIMER - WHEN ADDING INSTALLATION HOLES BE SURE TO USE A SELF-ETCHING PRIMER TO PREVENT CORROSION, FASTENER FAILURE AND INJURY.

MOUNTING POINTS MUST HAVE METAL-TO-METAL CONTACT - USE PROVIDED MOUNTING SPACERS TO ACCOMMODATE FOR VEHICLE FEATURES, CARPET OR SUBFLOORS.

PROVIDE CLEARANCE FOR SPACERS - IF THE INSTALLATION VEHICLE CONTAINS A CARPET OR SUBFLOOR, USE A 1-3/16" DIAMETER CARPET CUTTER (P/N: 31183-0) AT ALL MOUNTING LOCATIONS TO OPEN UP ROOM FOR SPACERS.

CHECK SPACER ORIENTATION - BE SURE THAT THE INDENT IN THE SPACER COVERS THE PLUSNUT HEAD; THIS ENSURES THE MOST METAL-TO-METAL CONTACT AND REDUCES VIBRATION.

PLUSNUT INSTALLATION - A PLUSNUT GUN IS RECOMMENDED FOR PLUSNUT INSTALLATION FOR ITS PRODUCTION SPEED. HOWEVER, A PLUSNUT SETTING TOOL CAN ALSO BE USED (P/N: 22200-0).

THRU-BOLT CLEARANCE - WHEN USING A THRU-BOLT AT ANY MOUNTING LOCATION, BE SURE THAT YOUR HOLE HAS 1/16" CLEARANCE.

FASTENERS USED
BAG REFERENCE: BAG 66068

FAS0497
5/16-18X.75 SS
SET SCREW
QTY: 4

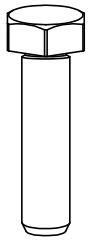

FAS0830
5/16-18X1.25 SS
SCREW, HH
QTY: 8

FAS0552
5/16 SS
FLAT WASHER
QTY: 8

FAS0861
5/16-18 SS
HH FLG NUT
QTY: 8

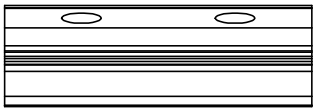

63491
RAIL SLIDE
2"
QTY: 6

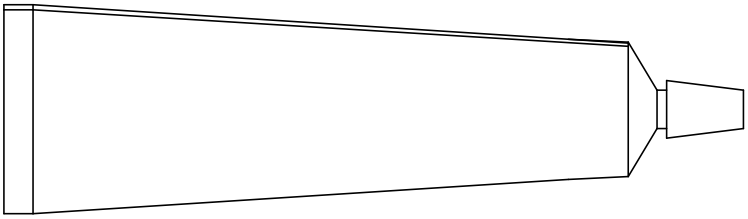

26618-0
SILICONE
1 OZ TUBE
QTY: 1

INTENTIONALLY LEFT BLANK

STEP 1 - CONNECT ROOF RAILS

STEP 1:
INSTALL 63491,
(2) FAS0497
(2 PLACES)
5/32 HEX DRIVE

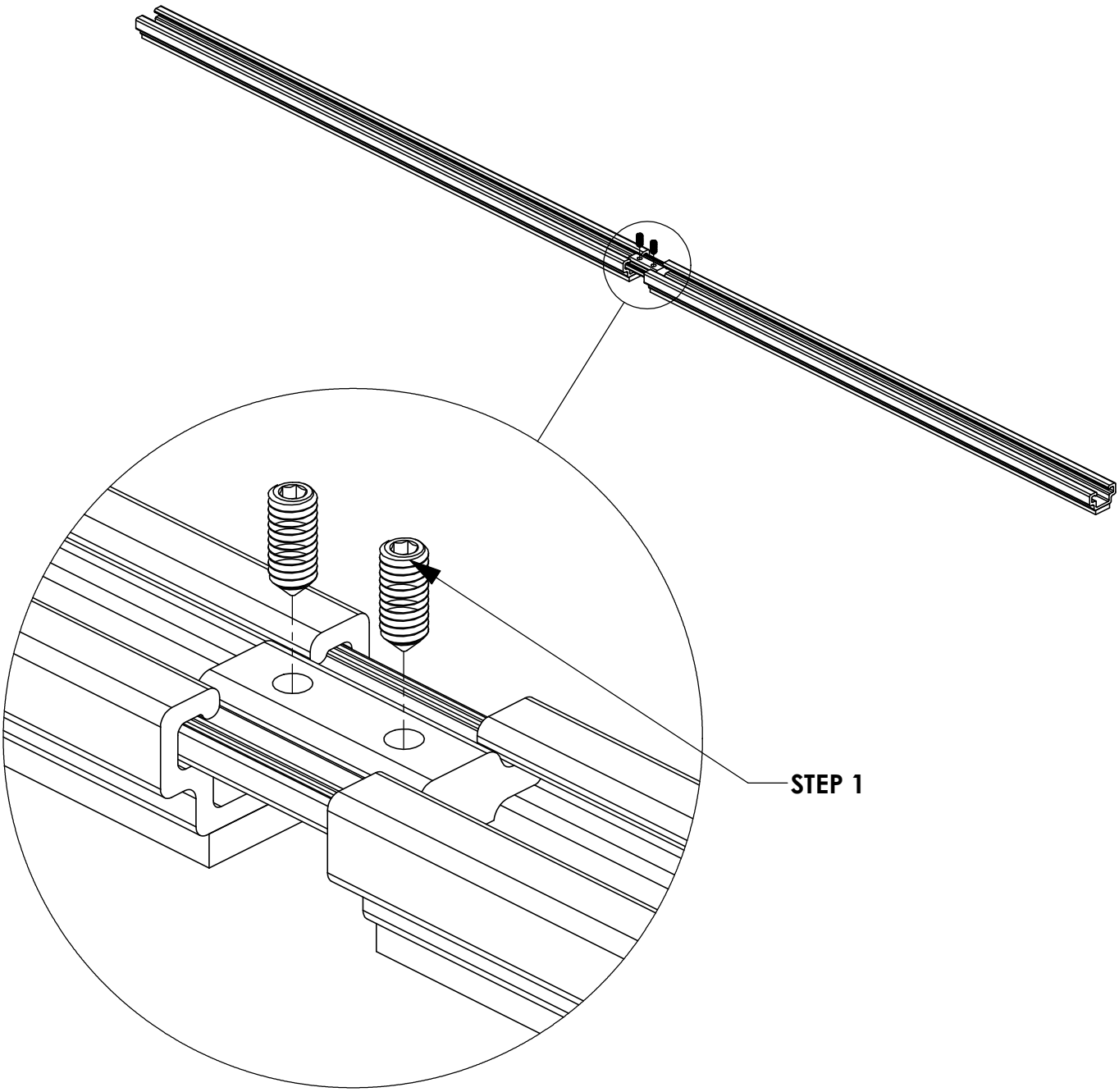

STEP 2 - MARK AND DRILL HOLES TO MOUNT RAILS

NOTE: INSIDE OF TOPPER SHOWN HERE

STEP 2.1:
LOCATE THE REINFORCEMENT PLATES ON BOTH SIDES OF TOPPER (FRONT AND REAR).

MOUNTING HOLES IN RAIL NEED TO BE ABOVE THESE WHEN INSTALLED!!!

STEP 2.2:
SET RAILS ON ROOF, CENTER-TO-CENTER DISTANCE OF RAILS MUST BE A MINIMUM OF 36.5", CENTERED ON THE TOPPER, WITH RAILS IN VALLEYS OF THE ROOF COREUGATIONS PLEASE ENSURE THE SPACING OF THE RAIL RAILS PROVIDE ENOUGH CLEARANCE FOR THE MOUNTING BRACKETS OF THE RACK TO BE INSTALLED. RACK SHOULD BE INSTALLED AS FAR REARWARD AS POSSIBLE.

STEP 2.3:
MARK AND DRILL HOLES (4 PLACES PER RAIL) 11/32" DRILL BIT

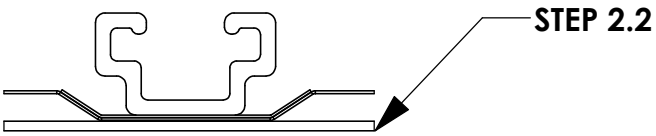

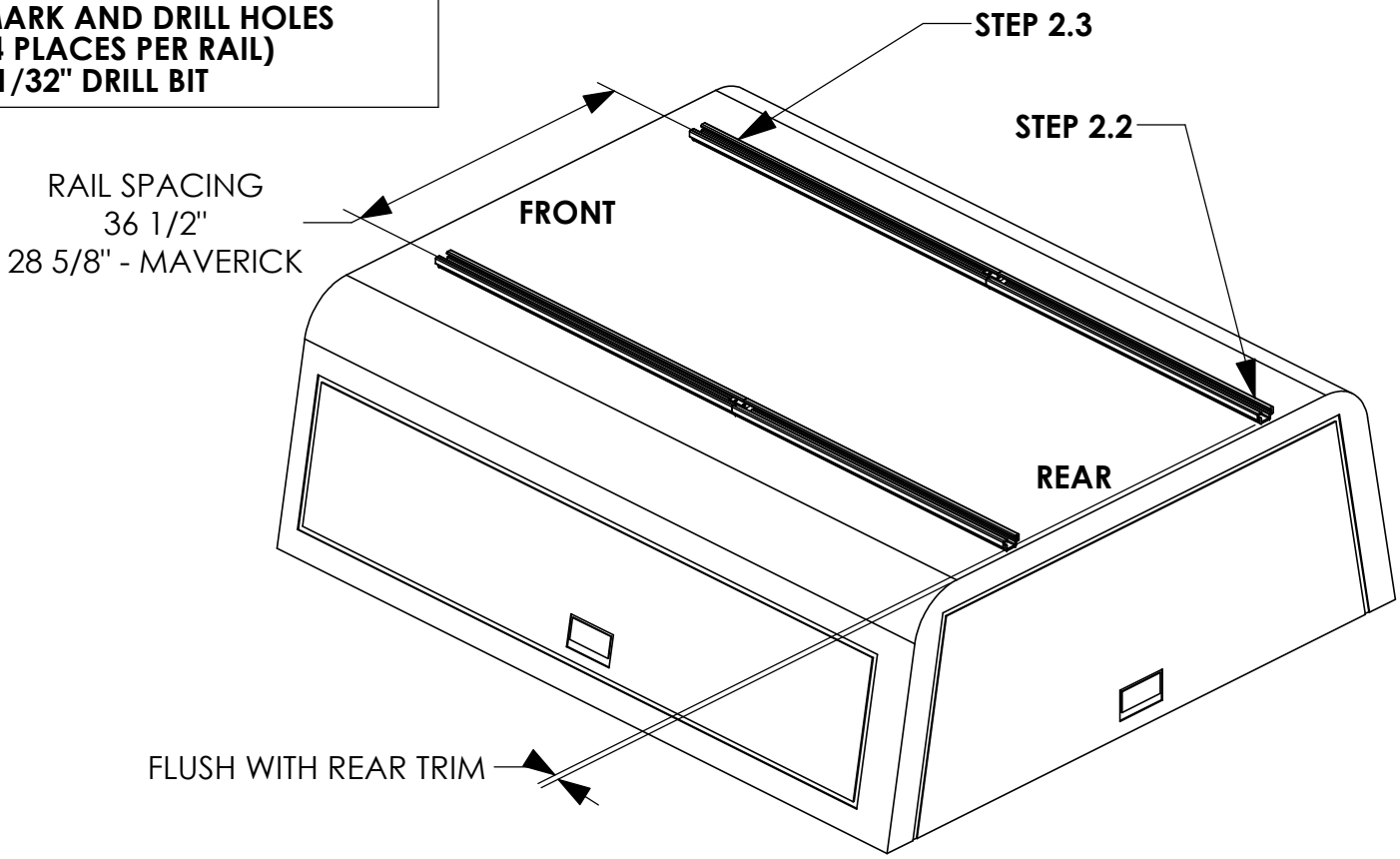

STEP 3 - MOUNT RAILS TO TOPPER

NOTE: INSIDE OF TOPPER SHOWN HERE

STEP 3.1:
POSITION PLATE TO ALLOW THE MOST SURFACE AREA OF THE PLATE TO CONTACT THE WELDED REINFORCEMENT PLATES.

STEP 3.2:
FULLY TIGHTEN BOLTS (4 PLACES PER RAIL)
FAS0830, FAS0552, FAS0861
1/2" SOCKET
1/2" WRENCH

STEP 3.3:
POKE FASTENERS THROUGH FOAM TAPE. APPLY SILICONE AROUND DRILLED HOLES!

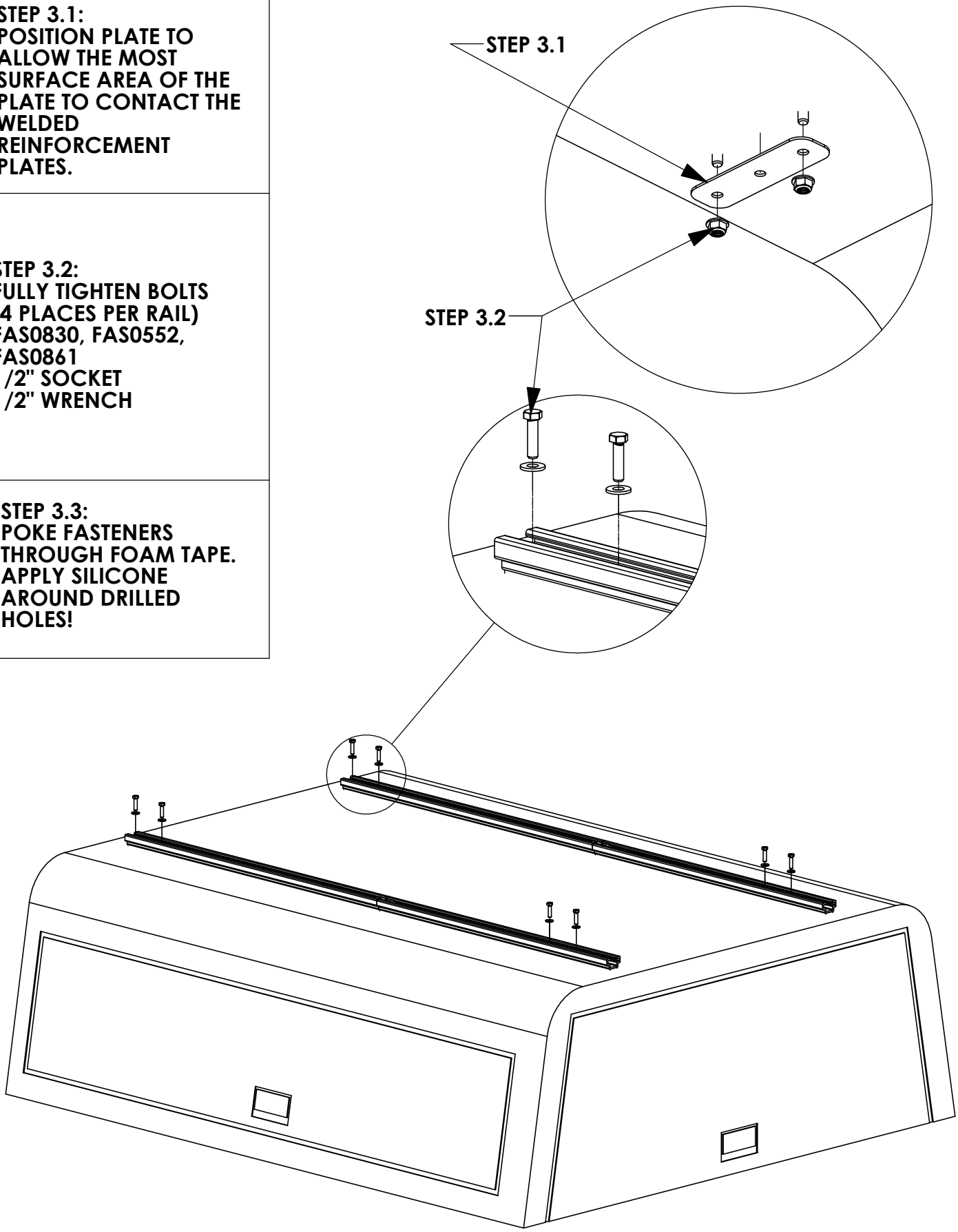

MAKE SURE ALL FASTENERS ARE TIGHTENED!!! INSTALLATION IS COMPLETE