ADRIAN STEEL
Cargo Management Solutions for Commercial Vehicles

MOUNTING FLOOR KIT MS144

PRODUCT WEIGHT

88.37 LBS

WIDTH X DEPTH X HEIGHT

69" X 129.62" X .50"

CAPACITY

N/A

COLOR

FLOORING BLACK, SILL PLATES YELLOW, MOUNTING BRACKETS BLACK

CATALOG NUMBER

MFKMS144

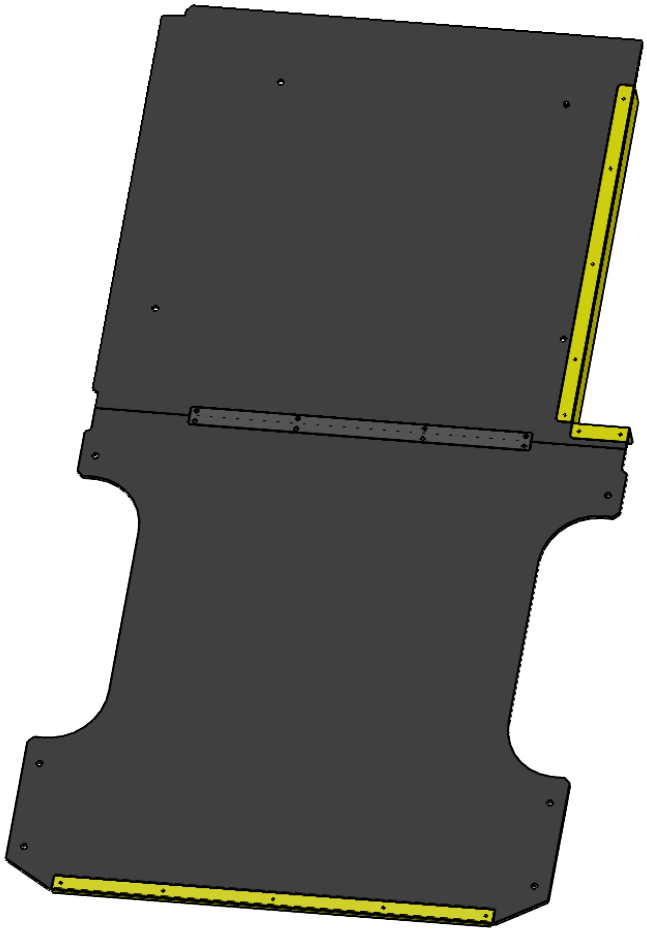

PRODUCT FEATURES

"This floor is designed to seamlessly fit the Mercedes Sprinter cargo vans with a 144" wheelbase. The floor is cut from 1/2" thick birch plywood with a phenolic resin textured top for durable, non-slip performance. The floor is compatible with standard internal combustion and electric drivetrain configurations. However, it is required when installing next-generation shelving and other products in the electric version of the van.

This floor eliminates the need to drill and fasten to the metal van floor. Using this flooring removes the dangers of drilling into an electric van. The floor is secured to existing tie down points in the van. Shelving and other items are fastened to the floor using threaded inserts that provide a 5/16"-18 hole for mounting anywhere on the floor. "

SEE PAGE 2 FOR APPLICATION NOTES, ACCESSORIES AND OTHER PRODUCTS THAT WORK WITH THIS UNIT.

MOUNTING FLOOR KIT MS144

CATALOG NUMBER **MFKMS144**

PRODUCT APPLICATION

MOUNTING FLOOR KIT AND FLOORING USED FOR THE MERCEDES SPRINTER 144 WHEEL BASE.

ACCESSORIES THAT WILL WORK WITH THIS PRODUCT

CATALOG NUMBER	*DESCRIPTION (smart)*
FLR-F-MS170	FLOOR,FRONT,MS170
FLR-R-MS144	FLOOR,R,MS144
FBKMS144	FLOOR BRKT KIT MS144
FSKMS	FLOOR SILL KIT MS

The information contained in this document is the sole property of ADRIAN STEEL COMPANY. ADRIAN STEEL COMPANY retains the right to modify and/or change the product of its design at any time with prior notification.

INSTR. NUMBER: INSMFKMS	PG: 1	REV: B
PART NUMBER: MFKMS170		
PART DESC.: MOUNTING FLOOR KIT MS170		

ITEM NO.	PART NUMBER	DESCRIPTION	QTY.
1	FSKMS	FLOOR SILL KIT MS	1
2	FBKMS170	FLOOR BRKT KIT MS170	1
3	FLRKMS170	MOUNTING FLOOR KIT MS170	1

NOTE: THIS INSTRUCTION IS VALID FOR THE FOLLOWING KITS:
- **MFKMS144 (2 PCS FLOOR)**
- **MFKMS170 (3 PCS FLOOR)**
- **MFKMS170X (3 PCS FLOOR)**

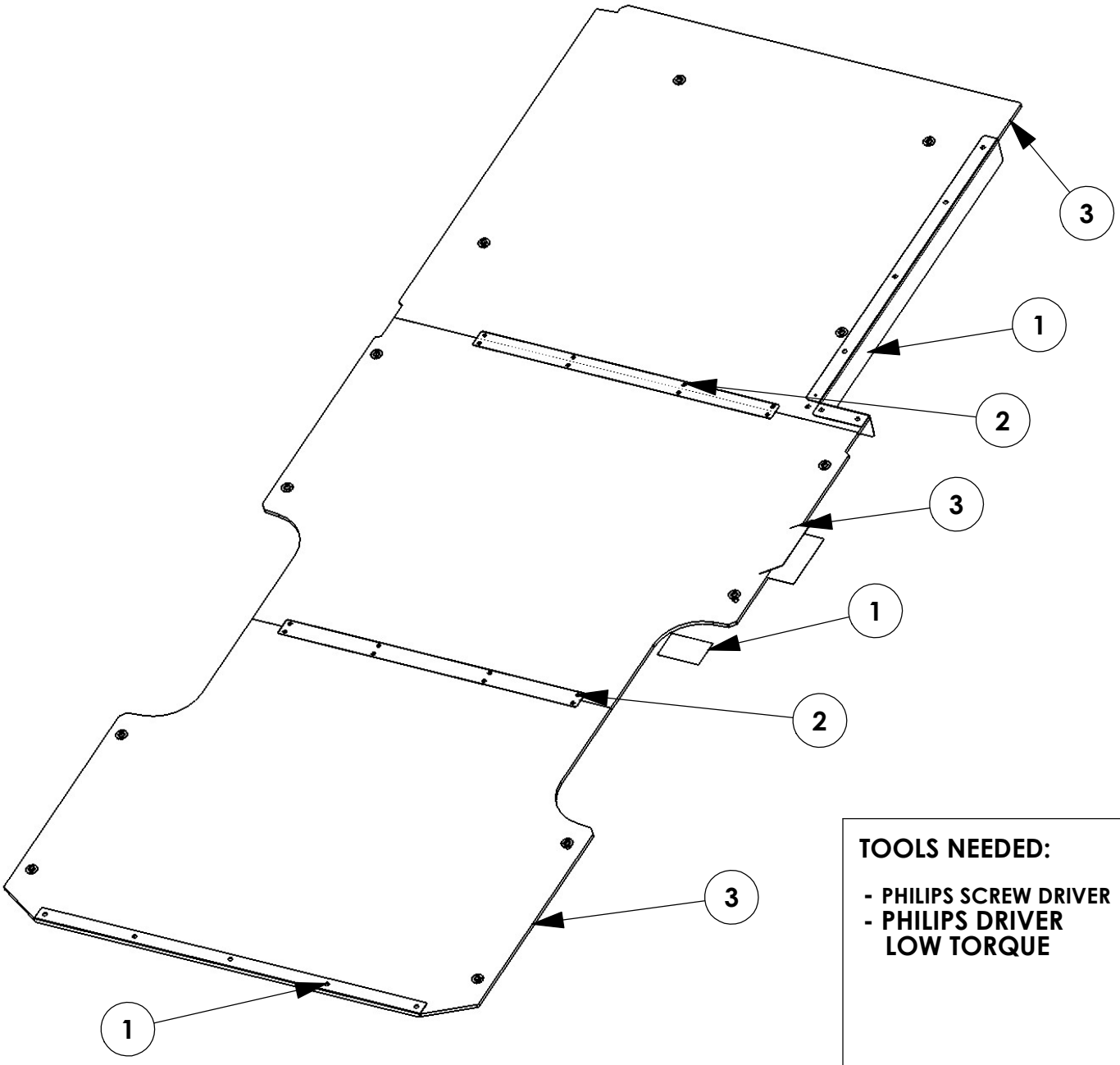

TOOLS NEEDED:

- **PHILIPS SCREW DRIVER**
- **PHILIPS DRIVER LOW TORQUE**

BEST PRACTICES

GET TO KNOW THE VEHICLE - AT THE BEGINNING OF ANY INSTALLATION, CHECK THE LOCATION OF THE FUEL TANK, FUEL LINES, BRAKE LINES, HIGH VOLTAGE BATTERIES AND WIRING HARNESSES TO AVOID INJURY OR PROPERTY DAMAGE FROM TOOL CONTACT.

SEAL ALL EXTERIOR HOLES - ALL INSTALLATION HOLES SHOULD BE SEALED WITH BUTYL TAPE OR SILICON TO PREVENT WATER AND EXHAUST GASES FROM ENTERING THE VEHICLE.

CONTROL DRILL DEPTH - TO AVOID DAMAGE TO THE VEHICLE, USE A DRILL STOP OR CLEARED STEP BIT WHEN DRILLING INSTALLATION HOLES.

ALWAYS ADD PRIMER - WHEN ADDING INSTALLATION HOLES BE SURE TO USE A SELF-ETCHING PRIMER TO PREVENT CORROSION, FASTENER FAILURE AND INJURY.

MOUNTING POINTS MUST HAVE METAL-TO-METAL CONTACT - USE PROVIDED MOUNTING SPACERS TO ACCOMMODATE FOR VEHICLE FEATURES, CARPET OR SUBFLOORS.

PROVIDE CLEARANCE FOR SPACERS - IF THE INSTALLATION VEHICLE CONTAINS A CARPET OR SUBFLOOR, USE A 1-3/16" DIAMETER CARPET CUTTER (P/N: 31183-0) AT ALL MOUNTING LOCATIONS TO OPEN UP ROOM FOR SPACERS.

CHECK SPACER ORIENTATION - BE SURE THAT THE INDENT IN THE SPACER COVERS THE PLUSNUT HEAD; THIS ENSURES THE MOST METAL-TO-METAL CONTACT AND REDUCES VIBRATION.

PLUSNUT INSTALLATION - A PLUSNUT GUN IS RECOMMENDED FOR PLUSNUT INSTALLATION FOR ITS PRODUCTION SPEED. HOWEVER, A PLUSNUT SETTING TOOL CAN ALSO BE USED (P/N: 22200-0).

THRU-BOLT CLEARANCE - WHEN USING A THRU-BOLT AT ANY MOUNTING LOCATION, BE SURE THAT YOUR HOLE HAS 1/16" CLEARANCE.

FASTENERS USED

BAG REFERENCE: **BAGMFKMS170**

BEST PRACTICE: ORGANIZE ALL FASTENERS & VERIFY THAT ALL ARE ACCOUNTED FOR

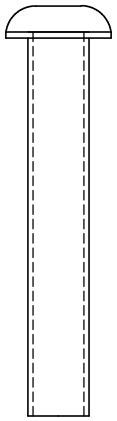

#1 FAS0742
SCREW, BUTTON HD
M8-1.25X.50
TOTAL 12

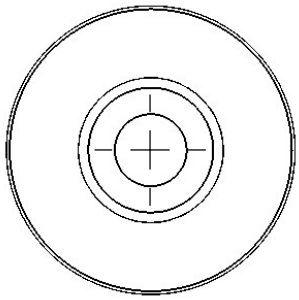

#2 FAS0833
WASHER,CUP FLANGED
1.5" DIA
TOTAL 12

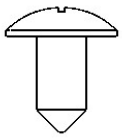

#3 FAS0044
SCREW THP
#14-10 X .5"
TOTAL 12

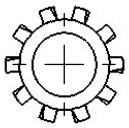

 # 4 FAS0085
WASHER, LCK EXT
5/16 ZP
TOTAL 12



 # 5 FAS0961
TAPPING INSERT
1/4-20 X 1/2" ZINC
TOTAL 16



#6 FAS0962
PHIL,FLT MS
1/4-20 x 1/2" ZN
TOTAL 16

INTENTIONALLY LEFT BLANK

STEP 1 - INSTALL MERCEDES 170 THREE PIECE FLOORING

Step 1A,1B,1C
FULLY TIGHTEN
FAS0961 AND FAS0961
(12 PLACES)
5MM ALLEN

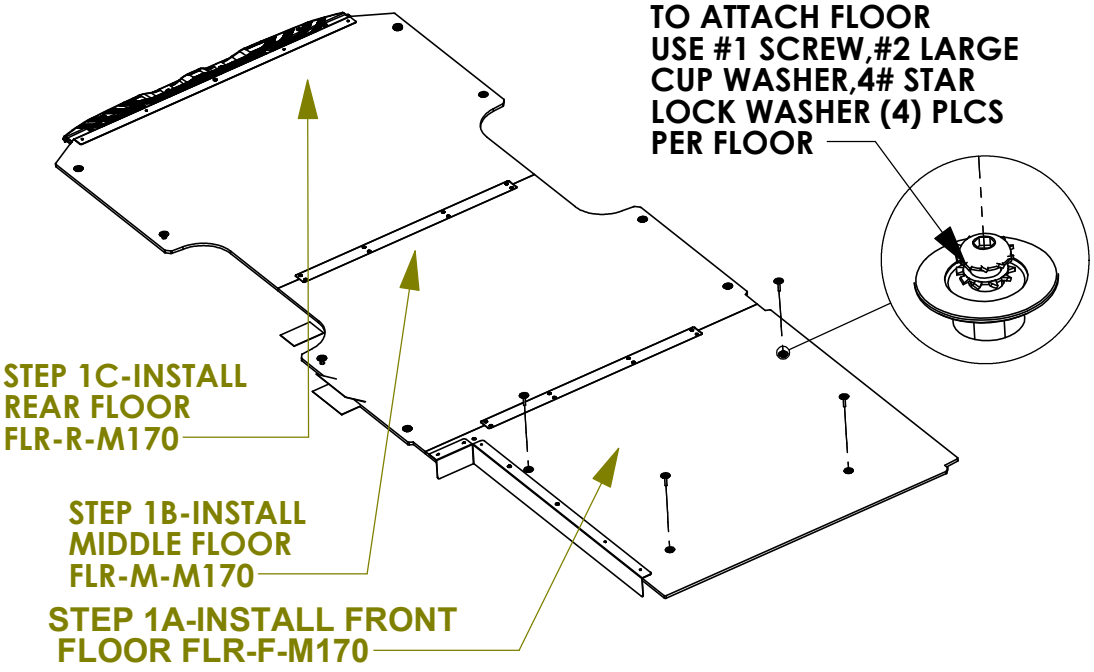

Step 1.2A,1.2B
FULLY TIGHTEN
(16) FAS0961 TAPPING INSERTS,ALLEN HEAD
(16) FAS0962, COUNTER SINK SCREW PHILLIPS HEAD SCREW

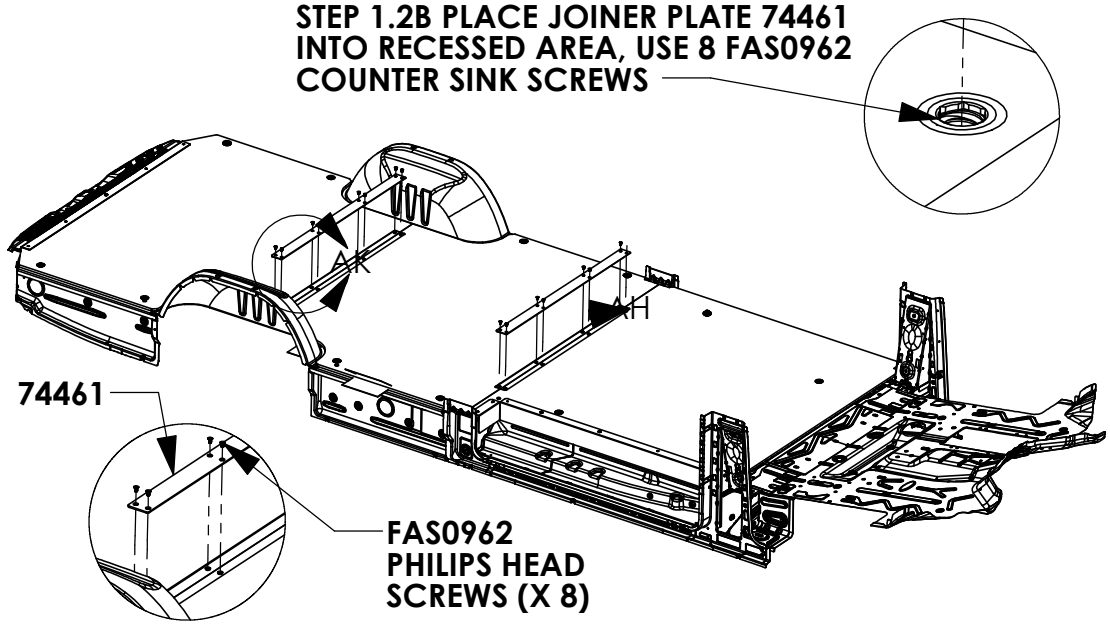

DETAIL AK
SCALE 1 : 19

DETAIL AG
SCALE 1 : 2

STEP 2 - INSTALL PASSENGER SIDE SILL PLATE SP-MS-Y

Step 2.1
FULLY TIGHTEN FAS0044 WOOD SCREWS X 7 USING PHILIPS HEAD SCREW DRIVER DO NOT OVER TIGHTEN

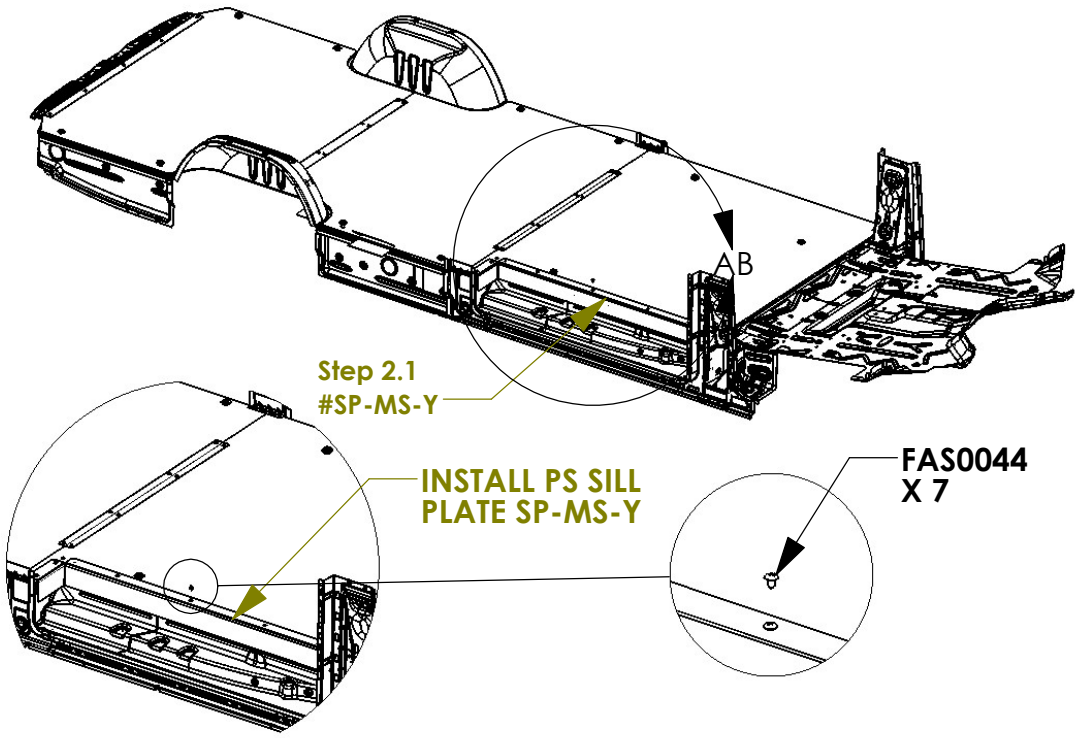

STEP 3 - INSTALL REAR SILL PLATE #74332-Y

Step 3.1
FULLY TIGHTEN FAS0044 WOOD SCREWS PHILLIPS HEAD DRIVER, DO NOT OVER TIGHTEN

