FASTENER GROUPS LISTED BELOW ARE USED ON ASSEMBLY AND INSTALLATION. SOME ASSEMBLY DRILLING IS REQUIRED. PART ON INSTRUCTIONS & FASTENERS ARE WITH PART ONLY. USE ASSEMBLY DRAWINGS TO IDENTIFY WHERE SEPARATE PARTS. CUSTOMER SPECIFIED SHELF DIMENSIONS ARE SHOWN HERE.

| SYM. | FASTENERS | QTY | DRILL |
|---|---|---|---|
| | **ASSEMBLY FASTENERS** | | |
| ⊖ | #14 x 3/4" THP.SCW. | (12) | 3/16 |
| | 1/4 EXT.TOOTH L'WASH. | (12) | |
| ● | 1/4-20 x 1/2" THP.SCW. | (24) | 9/32 |
| | 1/4-20 HX. FLANGE NUT | (24) | |
| ◕ | 1/4-20 x 3/4" HX.HD.SCW. | (2) | 9/32 |
| | 1/4-20 HX. FLANGE NUT | (4) | |
| | **INSTALLATION FASTENERS** | | |
| ● | 1/4-20 PLUSNUT "PB" | (2) | 3/8 |
| | 1/4-20 x 1" HH.SCW.FT | (2) | |
| | 1/4 PLN WASH | (2) | |
| | 1/4 SPLIT RING L'WASHER | (2) | |
| ⊕ | 5/16-18 PLUSNUT "PB" | (3) | 1/2 |
| | 5/16-18 x 1-1/2" HH.SCW.FT | (3) | |
| | 5/16 PLN WASH | (3) | |
| | 5/16 SPLIT RING L'WASHER | (3) | |
| ⊘ | 5/16 PLN. WASHER | (6) | 11/32 |
| | 5/16-18 HX.STOP NUT | (3) | |
| | 5/16-18 x 1-1/2" HH.SCW.FT | (3) | |
| | 1/2 PLN. WASHER | (3) | |
| | 22200 PLUSNUT TOOL N/C | (1) | |

ADRIAN STEEL CO.
906 JAMES STREET
ADRIAN, MI 49221
517/265-6194

MD602 DWR/CAB MOD

| DWG BY | ECN# | DATE | CHK'D BY | PACKAGE # | REV |
|---|---|---|---|---|---|
| BTS | 8329 | 08/23/05 | RES | MD 602 | B |

PACKAGE WEIGHT 100.92 #

HORIZONTAL & VERTICAL
HOG= 9.00 VOG= 28.00

| ITEM | PART NO. | DESCRIPTION | QTY. |
|---|---|---|---|
| 1 | 10388-1 | MOUNT BRACKET W/O FAS | 1 |
| 2 | 4B | PARTS TRAY 2x12x18 | 1 |
| 3 | 8 | 3-DRAWER MEDIUM | 3 |
| 4 | MB118 | MOUNT ANGLE 1-1/2" / GALV | 2 |
| 5 | MB120 | STRAP,BRKT.13-1/2" / GALV | 1 |

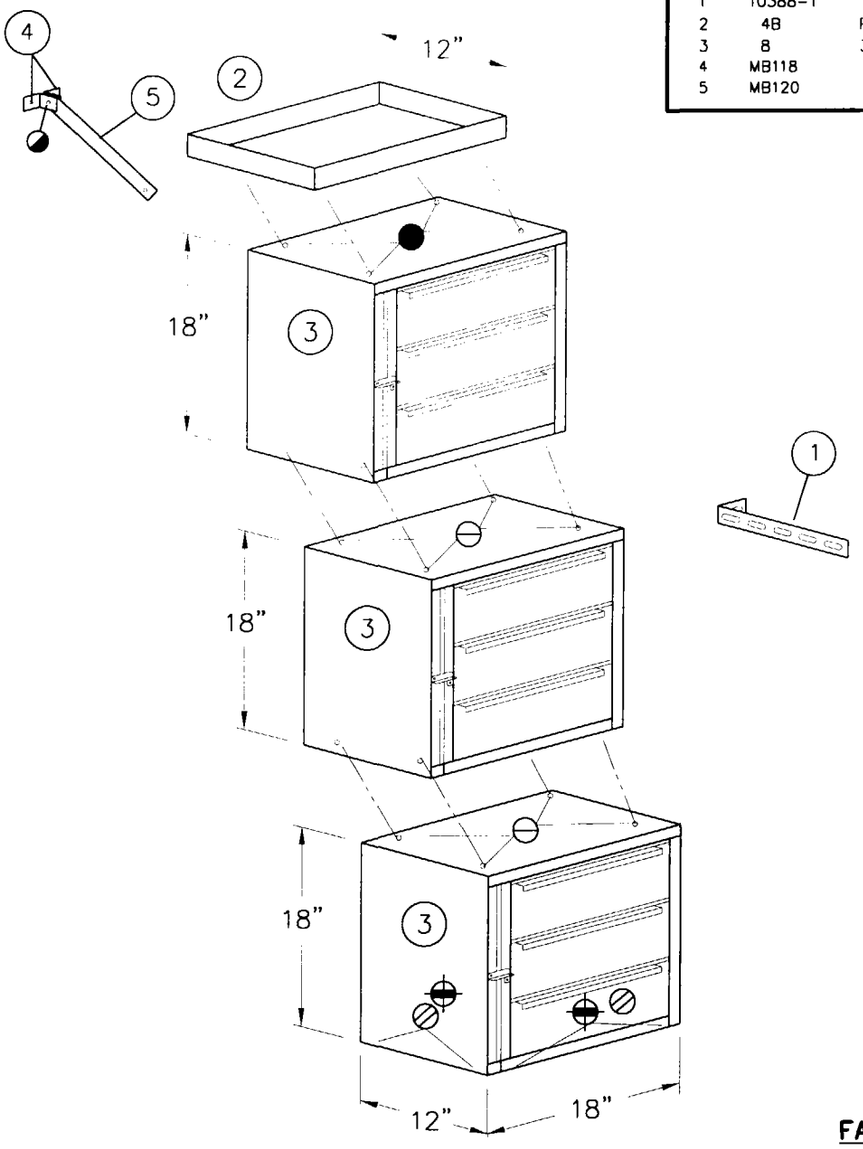


**CAUTION:**
DRILL THRU FLOOR WITH CARE
WATCH FOR GAS TANK, CONTROL LINES, & ELECTRICAL WIRING.

## FASTENING PROCEDURES

1. USE NUT & BOLT THRU WHEREVER POSSIBLE.
2. USE PLUSNUTS FOR BLIND FASTENING.
3. USE SHEET METAL SCREWS IN SHEAR ONLY.