ADRIAN STEEL
Cargo Management Solutions for Commercial Vehicles

SINGLE HVAC GAUGE COVER

PRODUCT WEIGHT

4.88 LBS

WIDTH X DEPTH X HEIGHT

11.0" X 3.5" X 10.0"

CAPACITY

1 SET OF HVAC GAUGES

COLOR

GRAY

CATALOG NUMBER

GC1

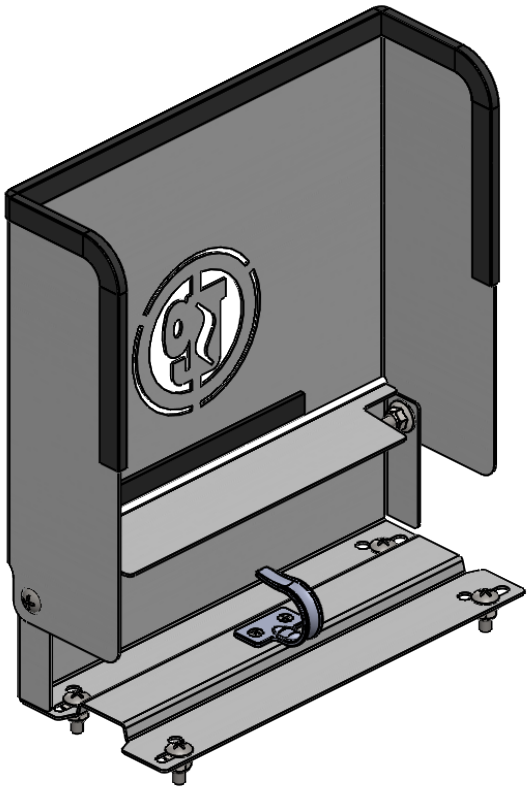

PRODUCT FEATURES

THIS PRODUCT IS USED TO STORE HVAC GAUGES AND REDUCE THE LIKELIHOOD OF IMPACT AND DAMAGE IN THE VEHICLE.

WHILE THIS IS CONSIDERED A UNIVERSAL ITEM THAT CAN BE INSTALLED TO ANY SURFCE, IS COMPATIBLE WITH NEXT GENERATION SHELVING. THE MOUNTING HOLES ARE OPTIMIZED FOR HAD SERIES AND 16" HD SERIES END PANELS.

INSTR. NUMBER	PG:	REV:
69990	1	B

PART NUMBER : **GC1**

PART DESC. : HVAC GAUGE COVER KIT

ITEM NO.	PART NUMBER	DESCRIPTION	QTY.
1	47900	UTILITY HOOK	1
2	54691	TRIM PINCHWELD, #2 BLK, 34" lg	1
3	65407	RUBBER STRIP 6.125", ADHESIVE BACK	1
4	69988-G	HVAC GAUGE COVER, LID, GRAY	1
5	69989-G	HVAC GAUGE COVER, BASE, GRAY	1

THIS PRODUCT CAN BE MOUNTED TO MANY FACES IN AN UPFIT. AN ADRIAN STEEL END PANEL IS REPRESENTED IN THIS INSTRUCTION

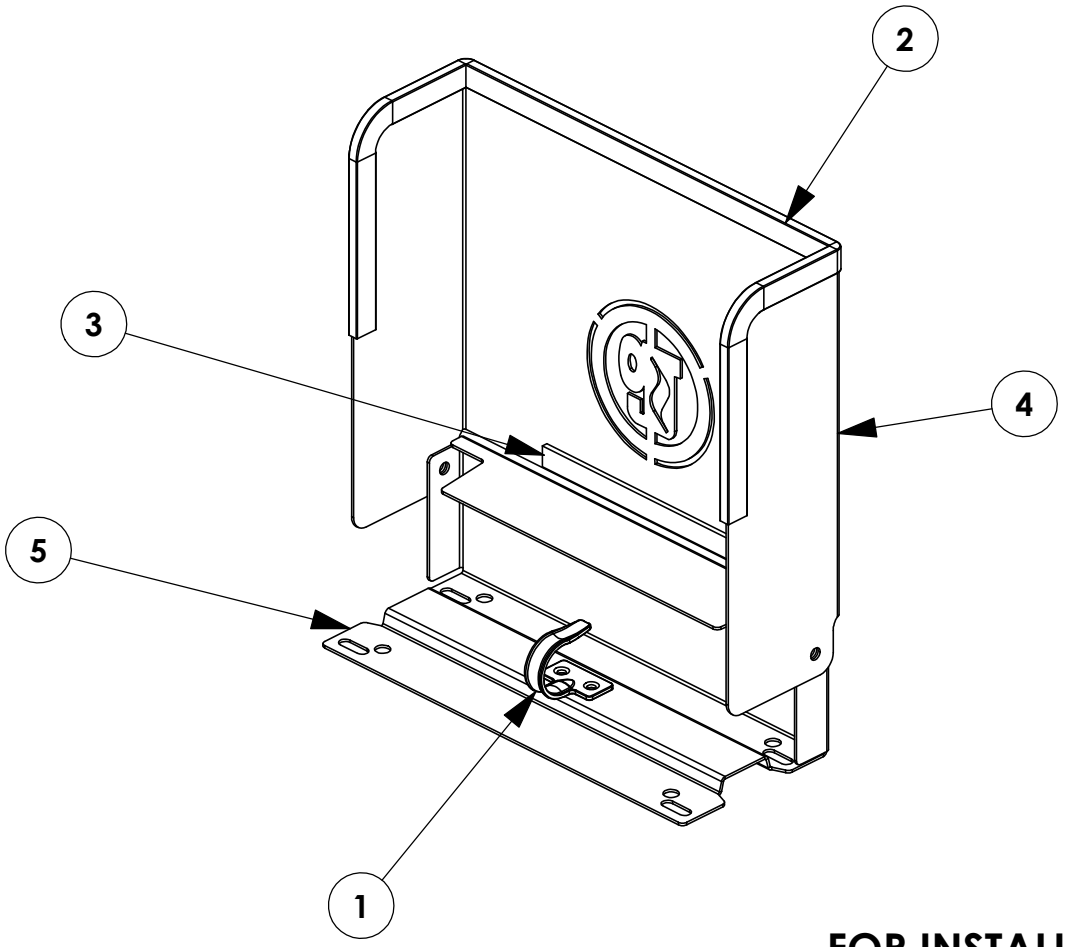

FOR INSTALLATION ON NEW ASC END PANEL, SEE PAGE 5!

BEST PRACTICES

GET TO KNOW THE VEHICLE - AT THE BEGINNING OF ANY INSTALLATION, CHECK THE LOCATION OF THE FUEL TANK, FUEL LINES, BRAKE LINES, HIGH VOLTAGE BATTERIES AND WIRING HARNESSES TO AVOID INJURY OR PROPERTY DAMAGE FROM TOOL CONTACT.

SEAL ALL EXTERIOR HOLES - ALL INSTALLATION HOLES SHOULD BE SEALED WITH BUTYL TAPE OR SILICON TO PREVENT WATER AND EXHAUST GASES FROM ENTERING THE VEHICLE.

CONTROL DRILL DEPTH - TO AVOID DAMAGE TO THE VEHICLE, USE A DRILL STOP OR CLEARED STEP BIT WHEN DRILLING INSTALLATION HOLES.

ALWAYS ADD PRIMER - WHEN ADDING INSTALLATION HOLES BE SURE TO USE A SELF-ETCHING PRIMER TO PREVENT CORROSION, FASTENER FAILURE AND INJURY.

MOUNTING POINTS MUST HAVE METAL-TO-METAL CONTACT - USE PROVIDED MOUNTING SPACERS TO ACCOMMODATE FOR VEHICLE FEATURES, CARPET OR SUBFLOORS.

PROVIDE CLEARANCE FOR SPACERS - IF THE INSTALLATION VEHICLE CONTAINS A CARPET OR SUBFLOOR, USE A 1-3/16" DIAMETER CARPET CUTTER (P/N: 31183-0) AT ALL MOUNTING LOCATIONS TO OPEN UP ROOM FOR SPACERS.

CHECK SPACER ORIENTATION - BE SURE THAT THE INDENT IN THE SPACER COVERS THE PLUSNUT HEAD; THIS ENSURES THE MOST METAL-TO-METAL CONTACT AND REDUCES VIBRATION.

PLUSNUT INSTALLATION - A PLUSNUT GUN IS RECOMMENDED FOR PLUSNUT INSTALLATION FOR ITS PRODUCTION SPEED. HOWEVER, A PLUSNUT SETTING TOOL CAN ALSO BE USED (P/N: 22200-0).

THRU-BOLT CLEARANCE - WHEN USING A THRU-BOLT AT ANY MOUNTING LOCATION, BE SURE THAT YOUR HOLE HAS 1/16" CLEARANCE.

FASTENERS USED
BAG69987 AND BAGPEPACCMNT4

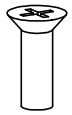

FAS0002
#8-32 X .50
FHP SCREW
QTY: 2

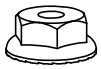

FAS0013
#8-32
HFLNG NUT
QTY: 2

FAS0055
1/4-20 ZP
NLK HFLNG NUT
QTY: 6

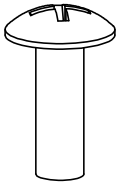

FAS0062
1/4-20 X .75 ZP
THP SCREW
QTY: 6

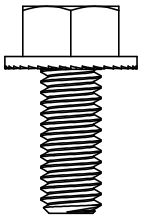

FAS0438
SCREW,HFLNG
5/16-18X.75ZP
QTY: 2

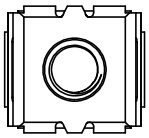

FAS0915
SNAP-IN NUT,
0.028-0.056"
QTY: 2

STEP 1 - ATTACH HOOK TO BASE

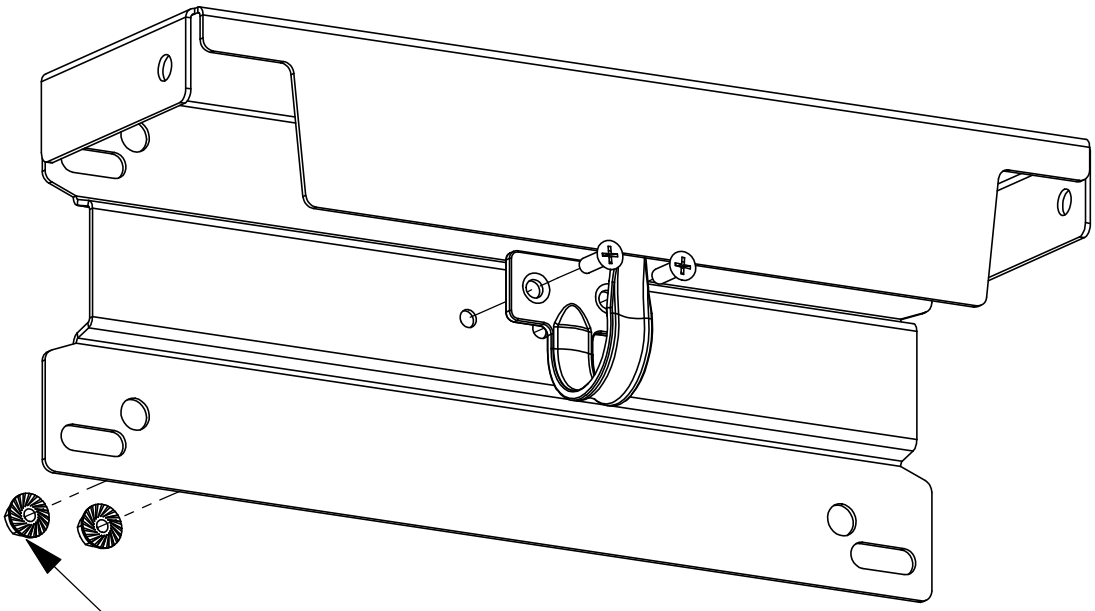

FAS0002, FAS0013
(2 PLACES)
#2 PHILLIPS
___" SOCKET

STEP 2A - INSTALL BASE TO SURFACE (ADRIAN STEEL END PANEL IS SHOWN)

NOTE: UNIT CAN BE INSTALLED ON VARIOUS FACES. THE HOLE PATTERN IS OPTIMIZED FOR *16" HD* SERIES, AND *HAD* SERIES SHELVING UNIT END PANELS.

IF MOUNTING SOMEWHERE ELSE, MARK AND DRILL OUT HOLES WITH A 9/32" STEP/DRILL BIT .

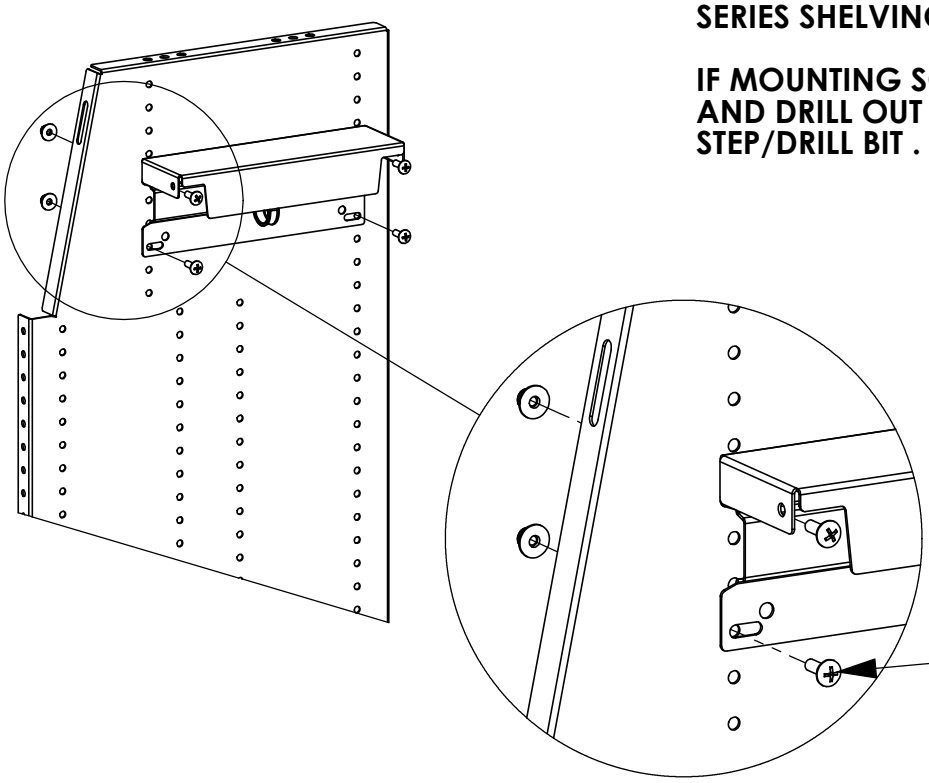

FAS0062, FAS0055
(4 PLACES)
#2 PHILLIPS
7/16" SOCKET

STEP 2B - INSTALL BASE TO SURFACE (NEW ADRIAN STEEL END PANEL IS SHOWN)

STEP 1: ALIGN BRACKET IN DESIRED POSITION AND INSERT FAS0915 (QTY: 4) INTO CORRESPONDING CUTOUTS.

STEP 2: PLACE BRACKET OVER INSERTED FASTENERS AND SECURE USING FAS0438 (QTY: 4) AND 1/2" SOCKET OR WRENCH

STEP 3: FULLY TIGHTEN ALL FASTENERS

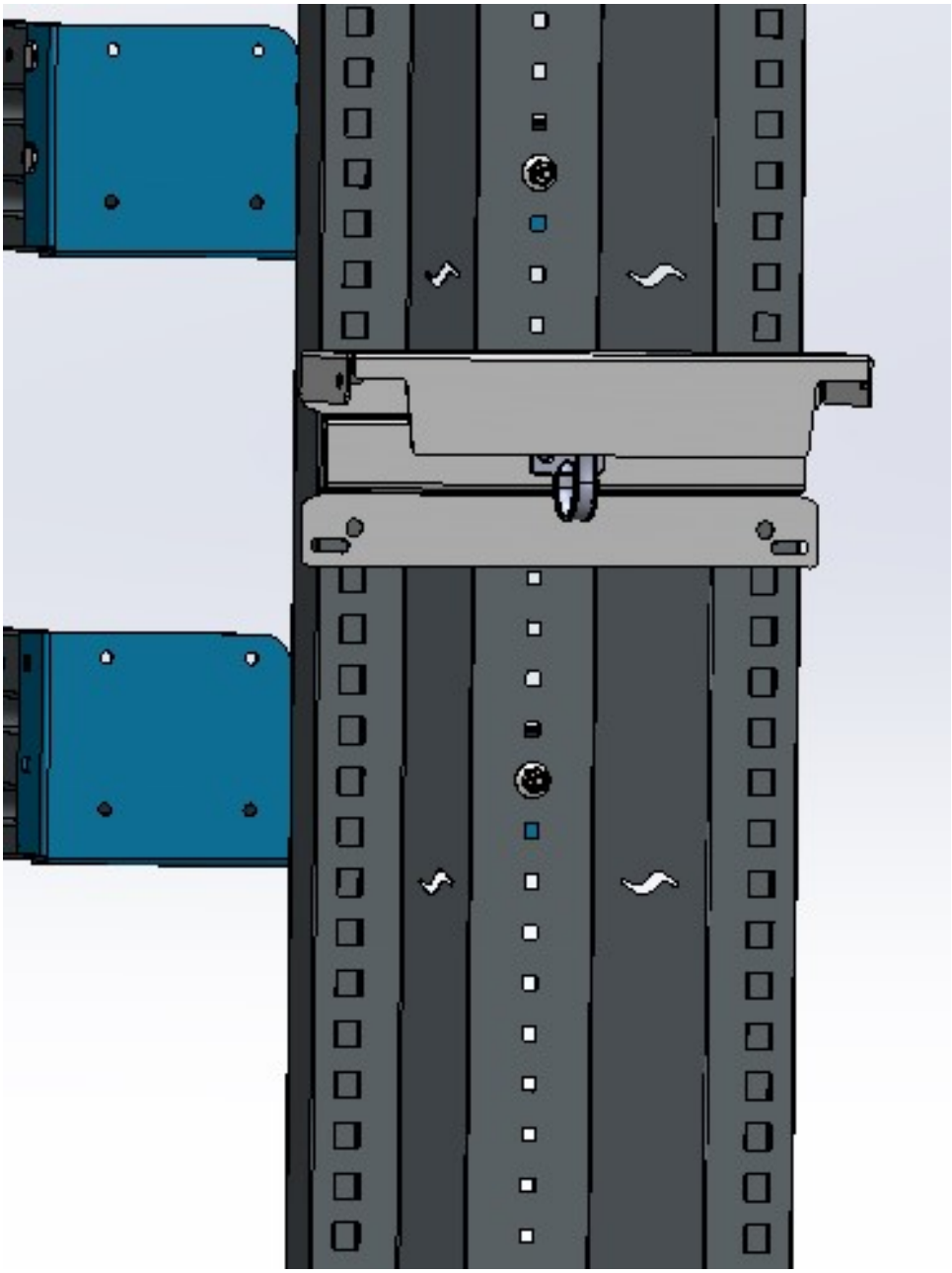

STEP 3 - ATTACH PINCHWELD TO LID

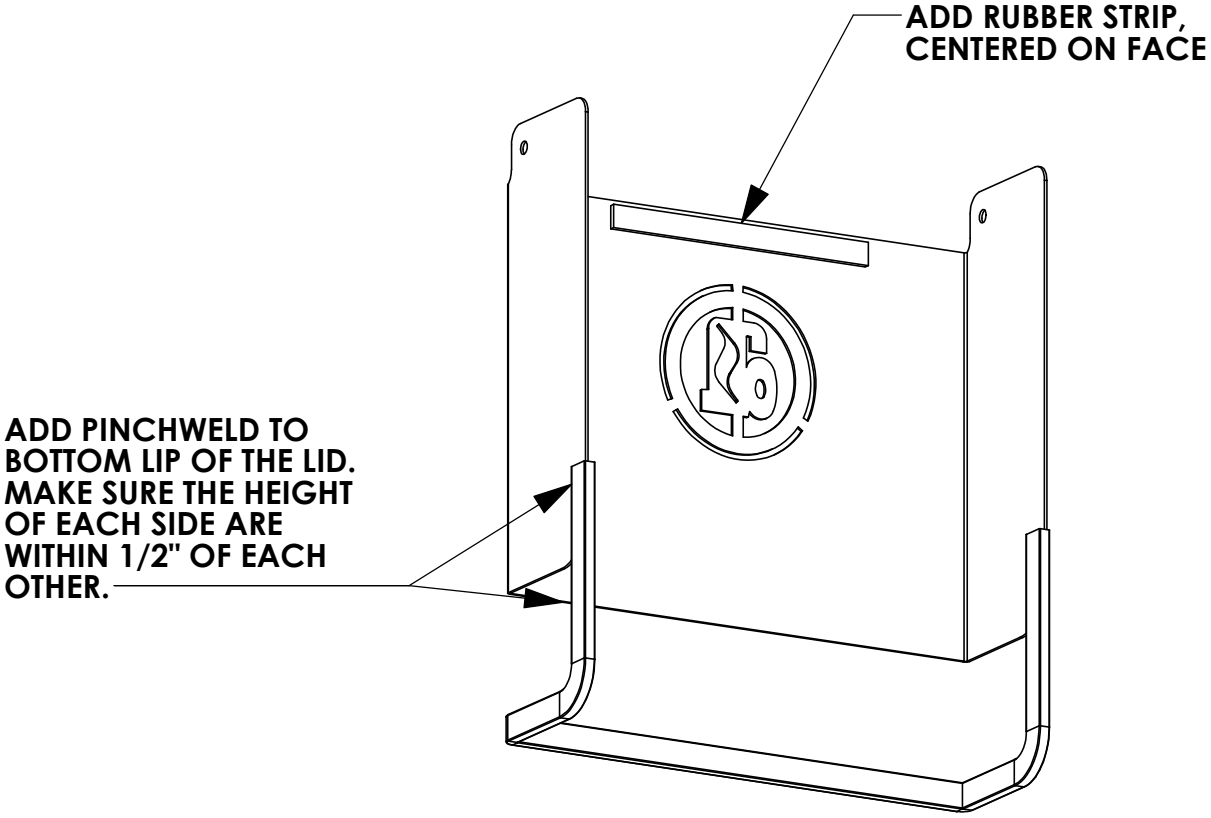

STEP 4 - INSTALL LID ON BASE

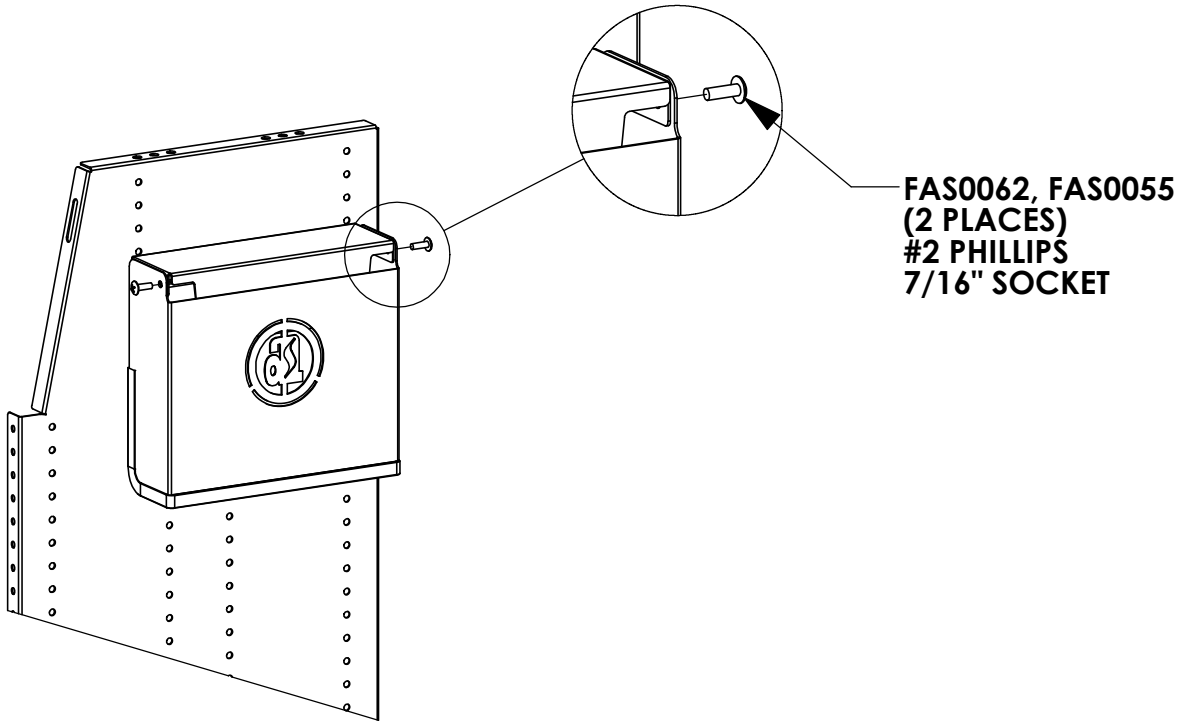

INSTALLATION IS COMPLETE!