RISER KIT, DC12

PRODUCT WEIGHT

2.12 LBS

WIDTH X DEPTH X HEIGHT

3" W X 1.75" H

CAPACITY

15 lbs Total Weight

COLOR

GRAY

CATALOG NUMBER

ADC12RK

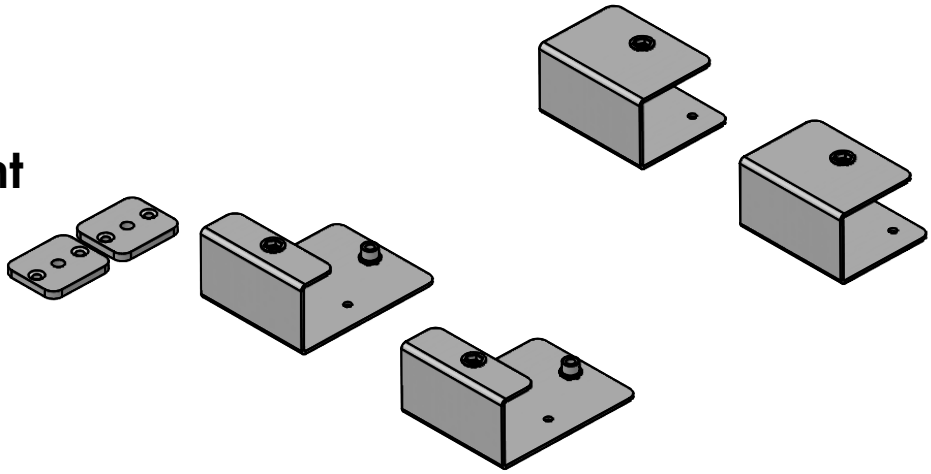

PRODUCT FEATURES

SEE PAGE 2 FOR APPLICATION NOTES, ACCESSORIES AND OTHER PRODUCTS THAT WORK WITH THIS UNIT.

RISER KIT, DC12

CATALOG NUMBER **ADC12RK**

PRODUCT APPLICATION

Elevates the DC unit above the front lip of the shelf, allowing easy access to all three drawers. The risers also allow the DC unit to be secured to the shelf above, giving the system a rigid connection.to be mounted on next generation shelving in vehicle bay. By lifting the drawer unit above the shelf surface. Works with 14" deep next gen shelving and DC12

NOTE: * - XX = WIDTH, # = NUMBER OF SHELVES
(EXAMPLE - ASFK2T1448G4)

ACCESSORIES THAT WILL WORK WITH THIS PRODUCT

CATALOG NUMBER	*DESCRIPTION (smart)*
*ASFK2T14XXG#	NEXT GENERATION SHELVING KIT
DC12	DRAWER COMPONET 12" WIDE

The information contained in this document is the sole property of ADRIAN STEEL COMPANY. ADRIAN STEEL COMPANY retains the right to modify and/or change the product of its design at any time with prior notification.

INSTR. NUMBER	PG:	REV:
:INSDCRK	1	A

PART NUMBER : ADC6RK, ADC12RK

PART DESC. : RISER KIT, DC6, RISER KIT, DC12

ADC6RK

ITEM NO.	PART NUMBER	DESCRIPTION	QTY.
1	81910-G	RISER BRKT, DC6 AND DC12, FRONT, GRAY	1
2	81911-G	RISER BRKT, DC6 AND DC12, REAR, GRAY	1
3	BAGDCRK	FAS BAG, DC RISER KITS	1
4	FADUSPACER	FLAT FOR ADUSPACER	1

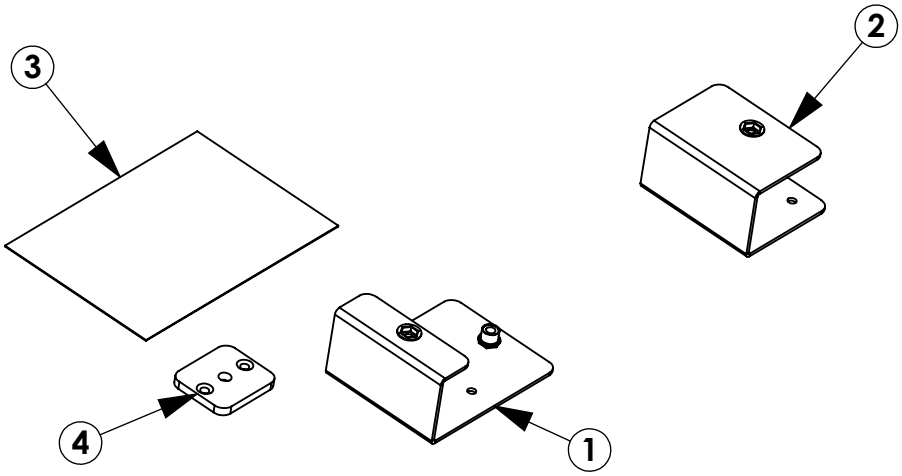

NOTE:
ADC6RK USED IN INSTRUCTIONS

ADC12RK

ITEM NO.	PART NUMBER	DESCRIPTION	QTY.
1	81910-G	RISER BRKT, DC6 AND DC12, FRONT, GRAY	2
2	81911-G	RISER BRKT, DC6 AND DC12, REAR, GRAY	2
3	BAGDCRK	FAS BAG, DC RISER KITS	1
4	FADUSPACER	FLAT FOR ADUSPACER	2

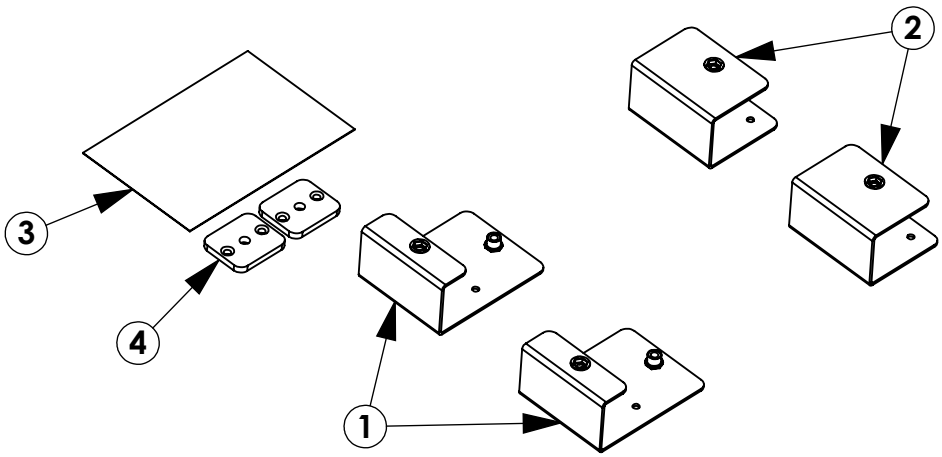

TOOLS NEEDED:

- **PHILPS HEAD SCREWDRIVER**
- **3/16" DRILL BIT**
- **9/32" DRILL BIT**
- **DRILL**
- **1/2" WRENCH**

BEST PRACTICES

GET TO KNOW THE VEHICLE - AT THE BEGINNING OF ANY INSTALLATION, CHECK THE LOCATION OF THE FUEL TANK, FUEL LINES, BRAKE LINES, HIGH VOLTAGE BATTERIES AND WIRING HARNESSES TO AVOID INJURY OR PROPERTY DAMAGE FROM TOOL CONTACT.

SEAL ALL EXTERIOR HOLES - ALL INSTALLATION HOLES SHOULD BE SEALED WITH BUTYL TAPE OR SILICON TO PREVENT WATER AND EXHAUST GASES FROM ENTERING THE VEHICLE.

CONTROL DRILL DEPTH - TO AVOID DAMAGE TO THE VEHICLE, USE A DRILL STOP OR CLEARED STEP BIT WHEN DRILLING INSTALLATION HOLES.

ALWAYS ADD PRIMER - WHEN ADDING INSTALLATION HOLES BE SURE TO USE A SELF-ETCHING PRIMER TO PREVENT CORROSION, FASTENER FAILURE AND INJURY.

MOUNTING POINTS MUST HAVE METAL-TO-METAL CONTACT - USE PROVIDED MOUNTING SPACERS TO ACCOMMODATE FOR VEHICLE FEATURES, CARPET OR SUBFLOORS.

PROVIDE CLEARANCE FOR SPACERS - IF THE INSTALLATION VEHICLE CONTAINS A CARPET OR SUBFLOOR, USE A 1-3/16" DIAMETER CARPET CUTTER (P/N: 31183-0) AT ALL MOUNTING LOCATIONS TO OPEN UP ROOM FOR SPACERS.

CHECK SPACER ORIENTATION - BE SURE THAT THE INDENT IN THE SPACER COVERS THE PLUSNUT HEAD; THIS ENSURES THE MOST METAL-TO-METAL CONTACT AND REDUCES VIBRATION.

PLUSNUT INSTALLATION - A PLUSNUT GUN IS RECOMMENDED FOR PLUSNUT INSTALLATION FOR ITS PRODUCTION SPEED. HOWEVER, A PLUSNUT SETTING TOOL CAN ALSO BE USED (P/N: 22200-0).

THRU-BOLT CLEARANCE - WHEN USING A THRU-BOLT AT ANY MOUNTING LOCATION, BE SURE THAT YOUR HOLE HAS 1/16" CLEARANCE.

BEST PRACTICE: ORGANIZE ALL FASTENERS & VERIFY THAT ALL ARE ACCOUNTED FOR

PAGE: 3

FASTENERS USED

BAG REFERENCE: **BAGDCRK**

ITEM NO.	PART NUMBER	DESCRIPTION	QTY.
1	FAS0062	SCREW,THP 1/4-20X.75 G5ZP	4
2	FAS0069	Screw, Truss Hd. Ph, 1/4-20x1.00	6
3	FAS0784	Rivet, Blind, Buttonhead, 3/16x.25 Grip	9
4	FAS1030	RIVET, BLIND, 3/16, 0.078"-0.375" GR	4
5	FAS0440	NUT,HEX NLK FLG 5/16-18 - ZP	2

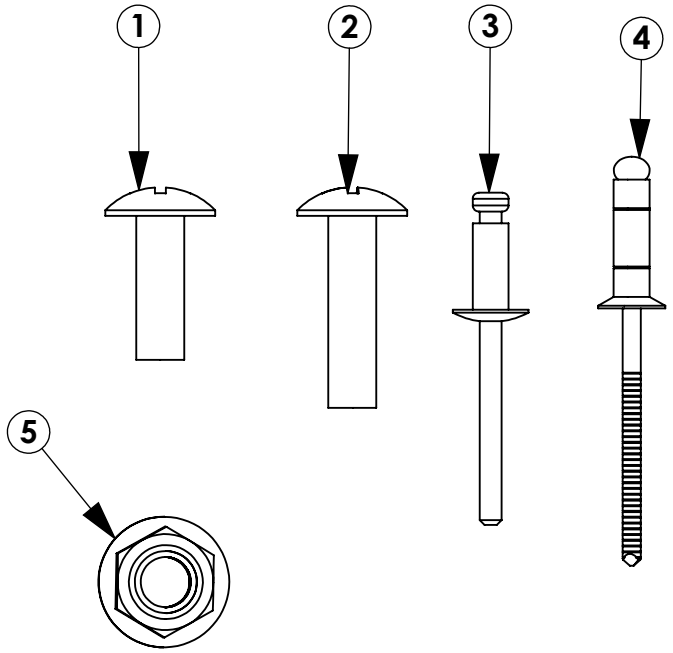

INTENTIONALLY LEFT BLANK

STEP 1 - MOUNTING DC RISERS TO SHELVING

Step 1.1
DETERMINE DRAWER LOCATION IN SHELVING, REMOVED DRAWERS FROM DC6

Step 1.2
REMOVE DC6, PLACE BRACKETS ON SHELVING.

HAND TIGHTEN FAS0062

PHILPS HEAD SCREWDRIVER

FULLY TIGHTEN AFTER Step 3.2

Step 1.2A
IF DRAWER IS GOING TO BE PLACED NEXT TO END PANELS, BEFORE PLACING DC6 ON RISERS, SWITCH FAS0924 AND FAS0055 PLACES ON THE SHELF ABOVE THE DRAWER

1/2" WRENCH

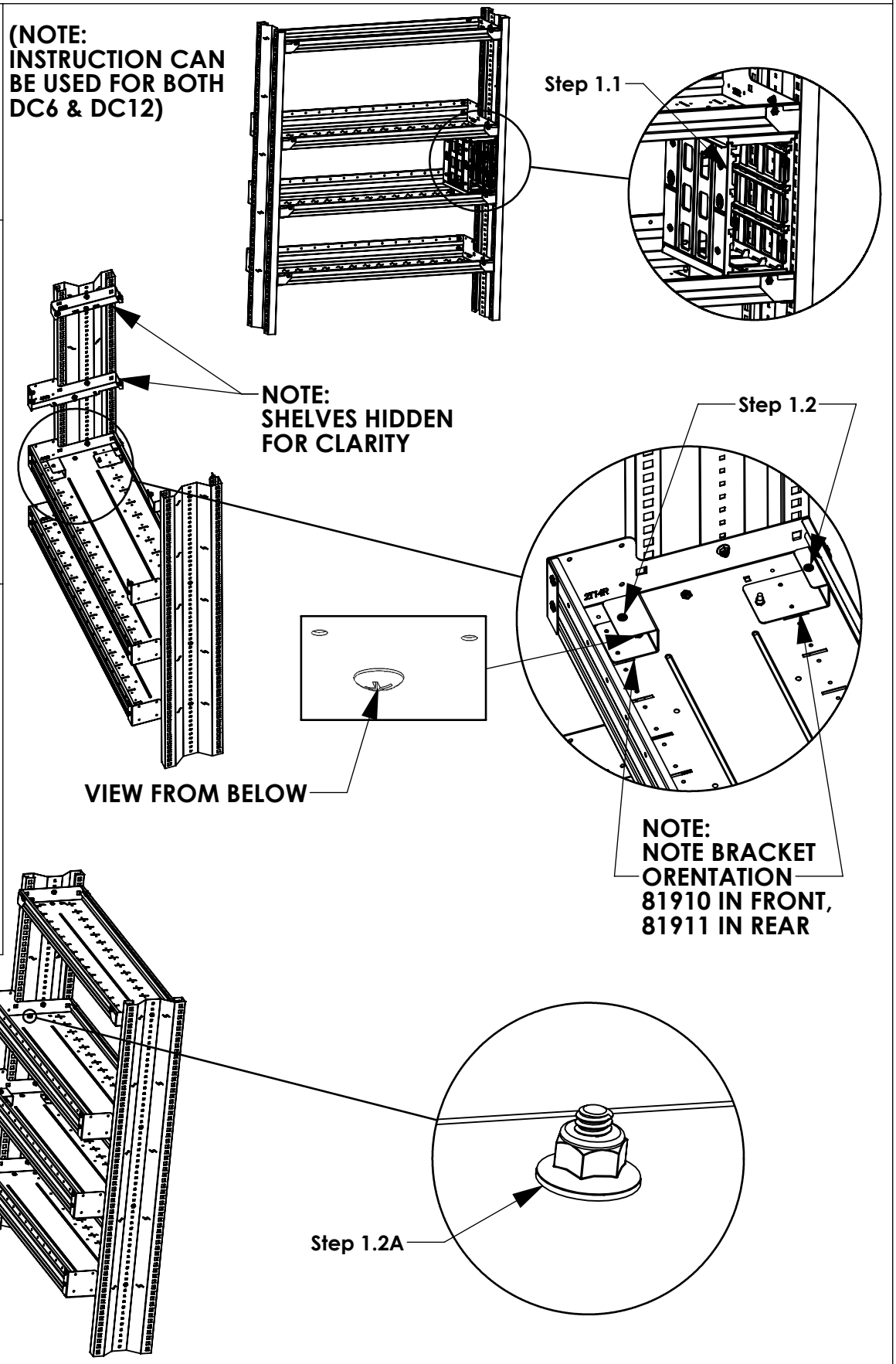

STEP 2 - ADDING SPACER TO DC6

Step 2.1
FOR DRAWERS THAT DO NOT HAVE HOLES FOR SPACER ON DC6 , PLACE SPACER IN SHELVING AND MARK WHERE TO DRILL 9/32" CENTER HOLE INTO DRAWER

Step 2.2
AFTER 9/32" HOLE HAS BEEN MARKED ALIGN HOLE IN SPACER AND MARK (2) 3/16" HOLES IN DRAWER, DRILL ALL HOLES

3/16" & 9/32" DRILL BIT
DRILL

Step 2.3
AFTER (2) 3/16" HOLES HAVE BEEN DRILLED, OR ARE EXISTING.

PLACE FADUSPACER OVER HOLES, AND RIVET (2)FAS1030 TO DC6

RIVET GUN

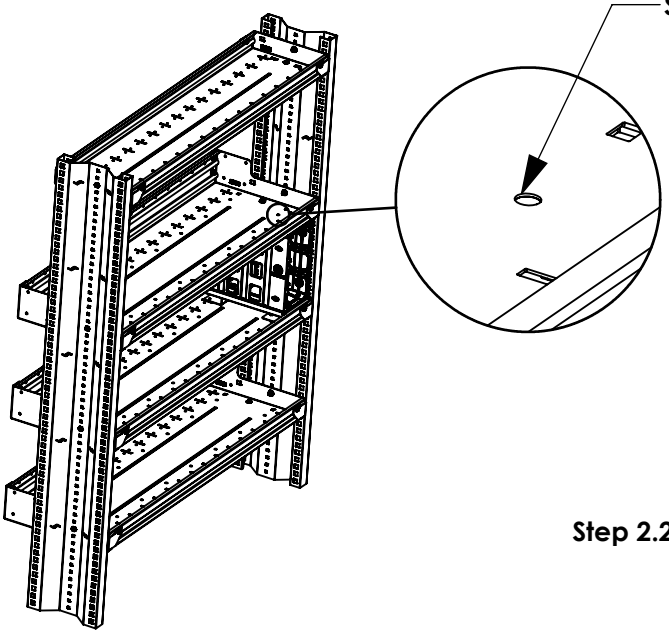

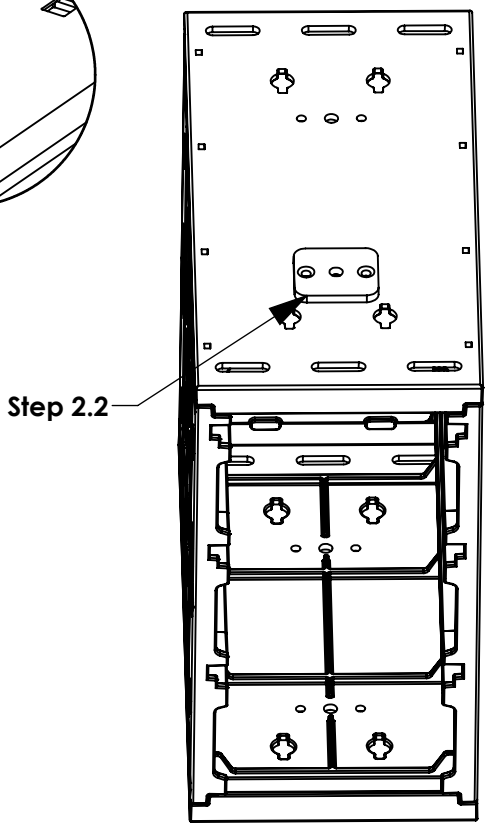

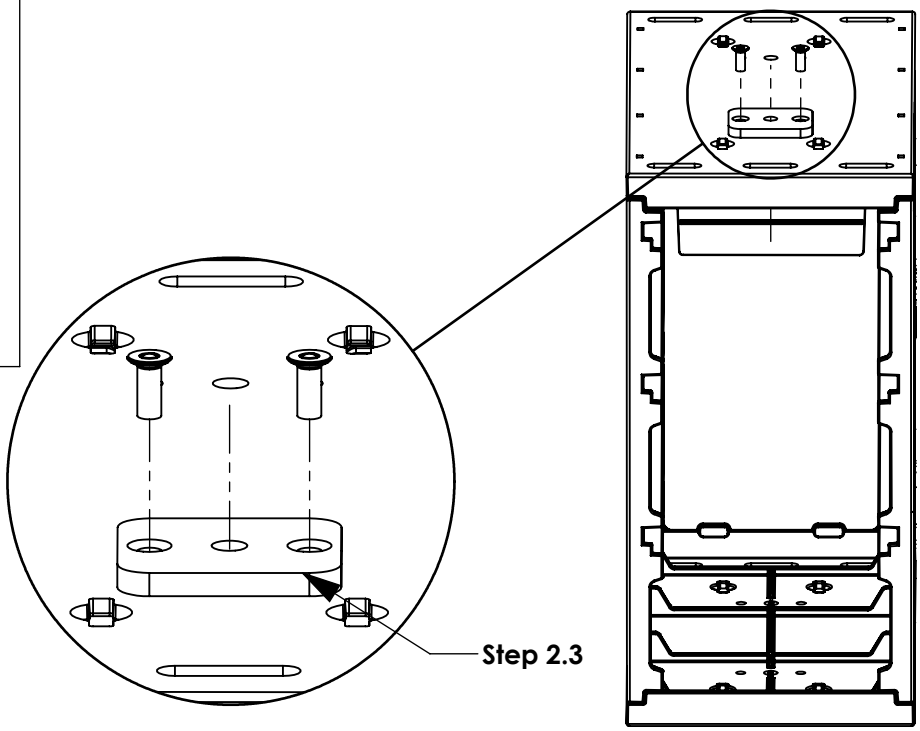

STEP 3 - INSTALL DC6 TO SHELVING

Step 3.1
PLACE DC6 BACK INTO SHELVING, FULLY TIGHTEN (3)FAS0069 & FAS0440

PHILPS SCREWDRIVER
1/2" WRENCH

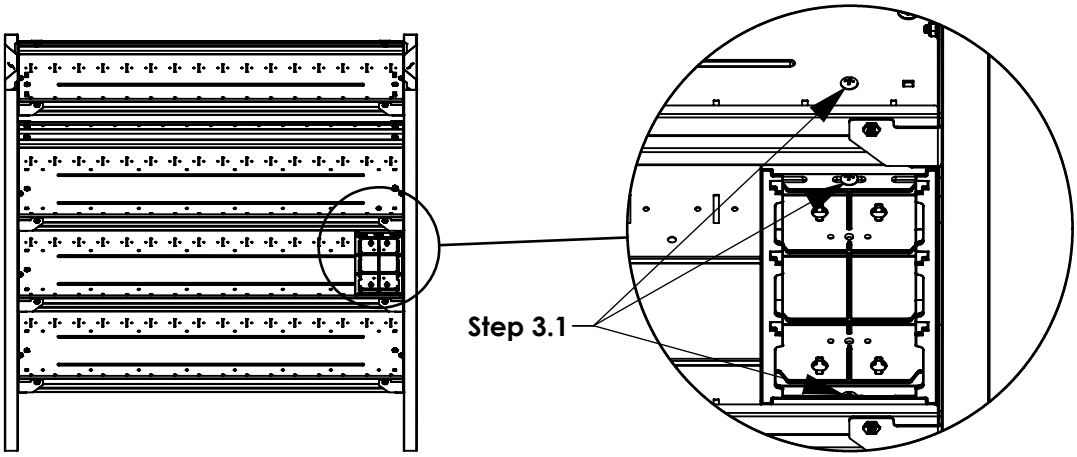

Step 3.2
RIVET (4)FAS0784 UNDER SHELVING TO SECURE RISERS

RIVET GUN

(TIGHTEN ALL FASTENERS)

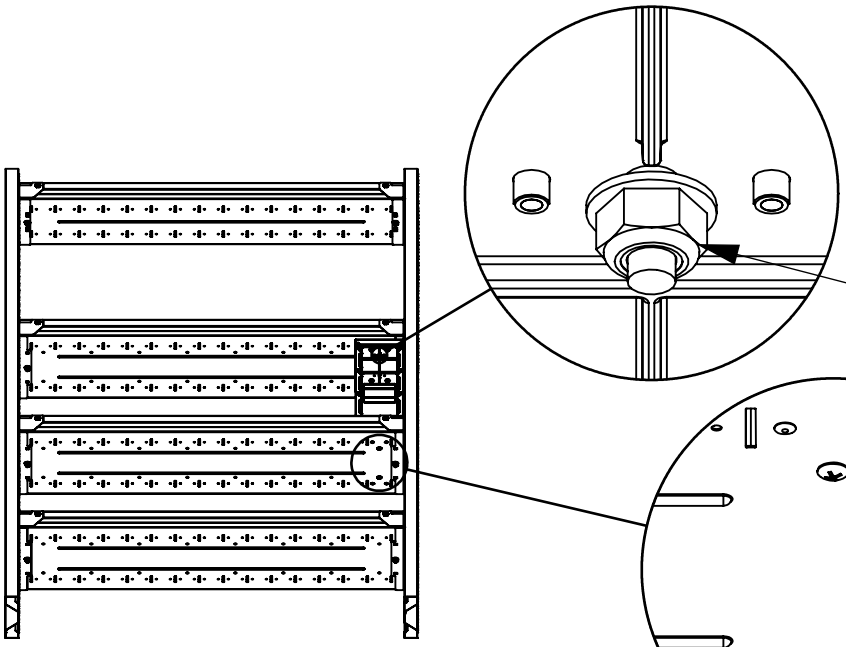

Step 3.3
PLACE DRAWERS BACK IN DC6

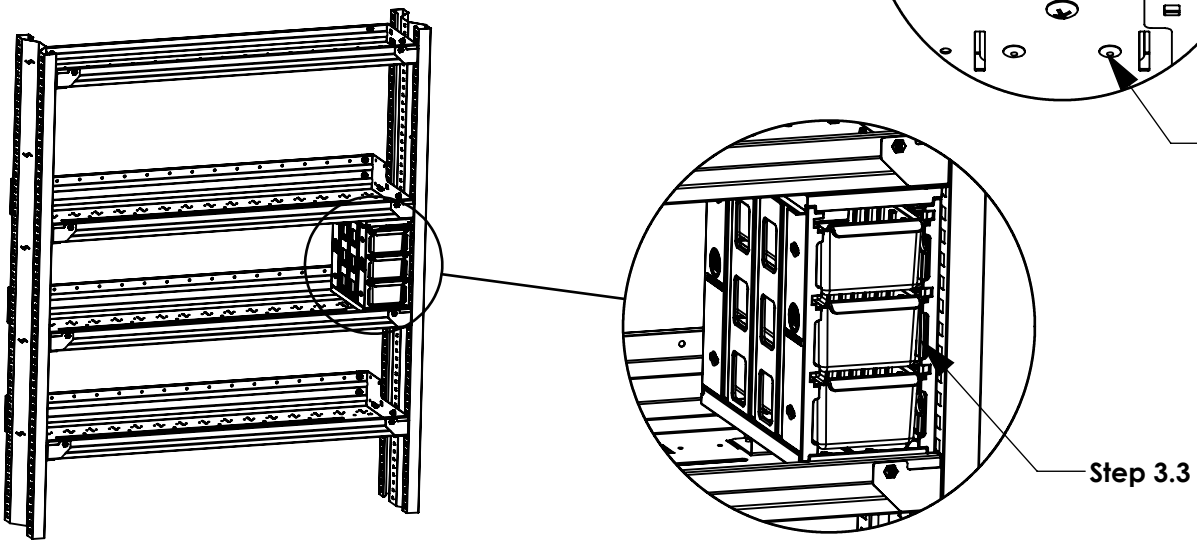

ADRIAN STEEL®

Cargo Management Solutions for Commercial Vehicles

Assembly/Installation Instructions and Owners Manual

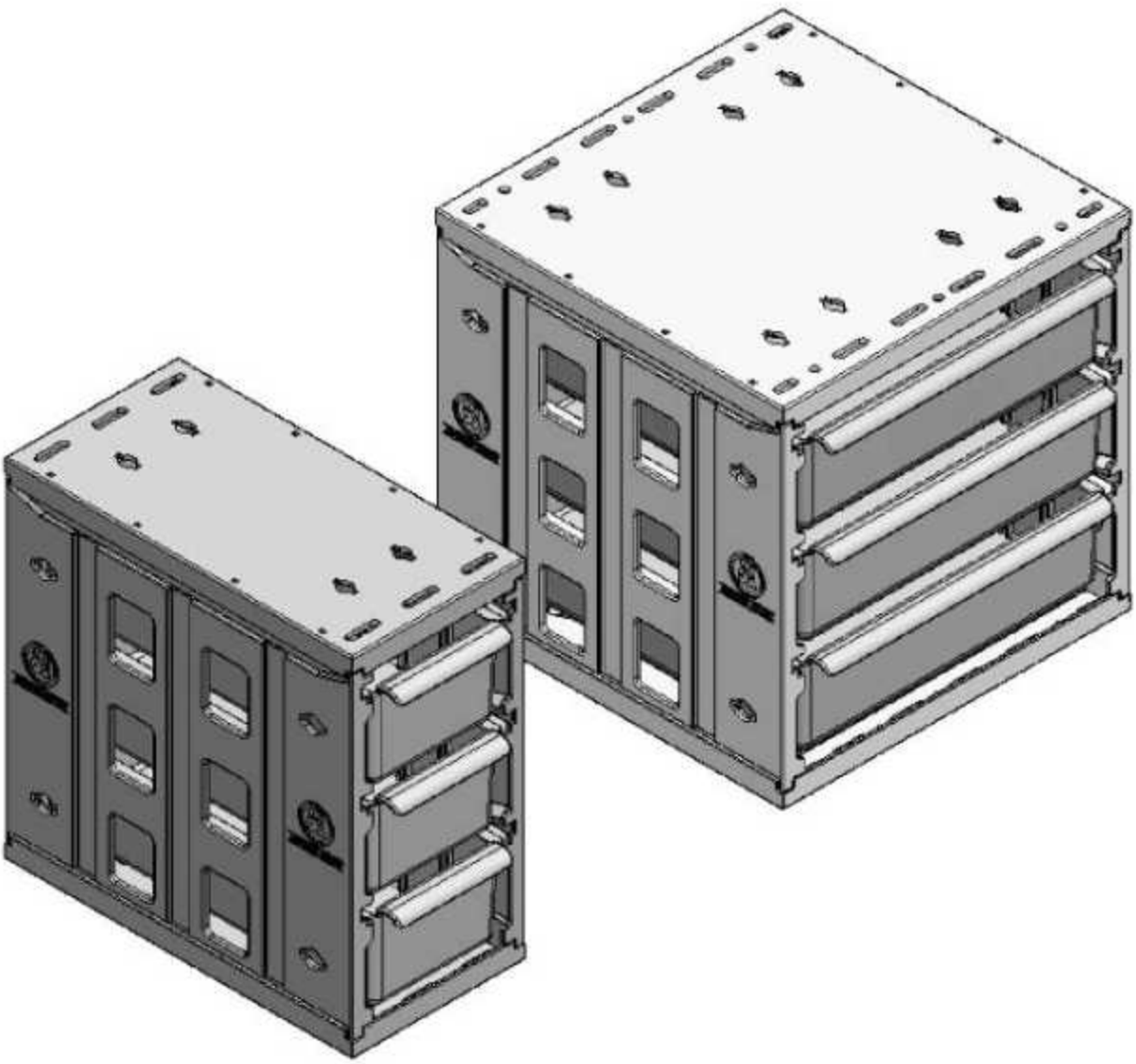

DC6 DC12 DS06212V DS06312H DS36012H DS46012

DRAWER COMPONETS AND DRAWER SYSTEMS

ADRIAN STEEL COMPANY • WWW.ADRIANSTEEL.COM • 906 JAMES STREET • ADRIAN, MI 49221 • 800-677-2726

Publication Number: 36071-0 Revision Level: B ECN Release: 13014

- PRECAUTIONS -

CAUTION

THE USE AIR IMPACT TOOLS CAN OVER-TORQUE FASTENERS AND CAUSE FASTENER FAILURE!

CAUTION

ALL INSTALLATION HOLES SHOULD BE SEALED WITH SILICON OR BUTYL SEALANT TO PREVENT EXHAUST FUMES FROM ENTERING THE VEHICLE!

DANGER

INSPECT FOR FUEL TANK, FUEL LINES, BRAKE LINES, HIGH VOLTAGE BATTERIES AND ELECTRICAL LINES PRIOR TO DRILLINGTO AVOID DAMAGING CRITICAL VEHICLE SYSTEMS OR INJURY TO INSTALLER DURING INSTALLATION PROCESS!

CAUTION

TO AVOID DAMAGING THE VEHICLE ALWAYS USE DRILL STOPS WHEN DRILLING ANY INSTALLATION HOLES!

- IMPORTANT WARRANTY REQUIREMENTS -

1. **SUBSTITUTING ADRIAN STEEL SPECIFIED FASTENERS FOR ASSEMBLY AND/OR INSTALLATION WILL VOID YOUR PRODUCT WARRANTY.**
2. **ALL HOLES DRILLED INTO VEHICLE SHOULD HAVE THE RAW METAL EDGES SEALED WITH A SELF-ETCHING PRIMER TO RESIST CORROSION AND POTENTIAL FASTENER POINT FAILURE.**
3. **ALL FASTENERS USED IN THE INSTALLATION OF THIS PRODUCT SHOULD BE TIGHTENED TO THE TORQUE(S) SPECIFIED IN THESE INSTRUCTIONS.**
4. **THESE INSTRUCTIONS SHOULD BE KEPT WITH THE VEHICLE.**

THE BASIC TOOLS NEEDED FOR MOST INSTALLATIONS

DRILL

DRILL BIT WITH STOP

RATCHET, SOCKETS AND/OR WRENCHES

SCREWDRIVERS

MEASURING TAPE

ADDITIONAL TOOLS MAY BE NEEDED FOR THIS INSTALLATION AND THEY WILL BE IDENTIFIED IN THE STEPS THAT FOLLOW.

ADRIAN STEEL
Cargo Management Solutions for Commercial Vehicles

Assembly/Installation Instructions and Owners Manual

WHEN INSTALLING PLUSNUTS MAKE SURE YOU USE THE CORRECT DRILL BIT WITH A STOP!

PLUSNUT SIZE	DRILL BIT SIZE
¼-20 PLUSNUT, FAS0052	***USE A 3/8" DIAMETER DRILL BIT WITH A STOP.***
5/16-18 PLUSNUT, FAS0091	***USE A 1/2" DIAMETER DRILL BIT WITH A STOP.***

OR

NOTE: A PLUSNUT SETTING TOOL IS REQUIRED FOR PLUSNUT INSTALLATION AND IS NOT SUPPLIED WITH THIS KIT. ORDER PLUSNUT TOOLS FROM ADRIAN STEEL (P.N. 22200-0)OR USE AN AIR POWERED PLUSNUT SETTING GUN.

NOTE: If your vehicle contains carpet or a rubber floor mat you will need to prepare the mounting locations using a 1-3/16" carpet cutter.	**1-3/16" DIAMETER CARPET CUTTER P.N. 31183-0.** 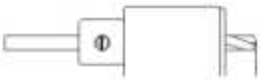

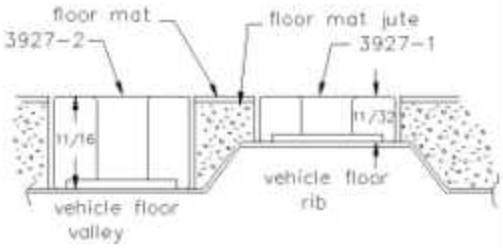

Step 01 Optional

If your vehicle contains carpet or a rubber floor mat you will need to prepare the mounting locations. **(if not, skip to STEP 02)**

Position the product to be installed into the vehicle and once your are satisfied with the mounting locations, mark the mounting locations. Using a 1-3/16" diameter carpet cutter. Select the appropriate floor spacers as shown in the illustration to the left. Set those aaside for use later into the installation process.

Once you have prepared the carpet/floor mat for

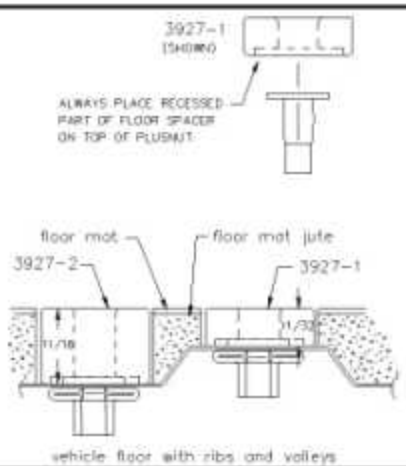

Step 02 Prepare Mounting Locations

Using a drill and drill bit *(see table at top of page for correct size)* drill the mounting holes in the vehicle sheet metal to prepare for installing the plusnuts.

If you are thru-bolting at any of the locations simply drill a hole that is 1/16" larger than the bolt size(s) for those locations.

Once you have drilled the holes into the vehicle, the raw metal edges should be sealed using a self-etching primer to resist corrosion and potential fastener point failure.

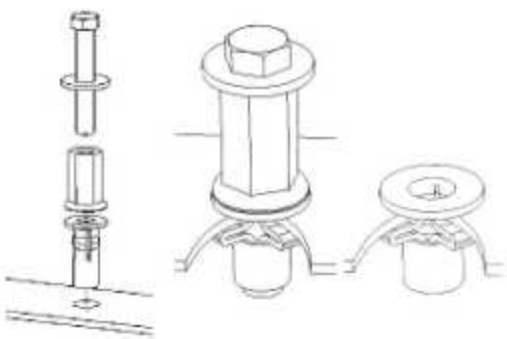

Step 03 Setting Plusnuts

Use a Air Powered Plusnut Setting Gun to "set the plusnut" or if installing manually with hand tools, assembly the following.

1/4-20UNC Plusnut (FAS0052)
- FAS0080 SCREW, HXHD, 1/4-20UNCx2.00, G8
- FAS0067 WASHER, FLAT, 1/4"ID
- 22200-0 PLUSNUT TOOL

5/16-18UNC Plusnut (FAS0091)
- FAS0095 SCREW, HXHD, 5/16-18UNCx2.00", G8
- FAS0086 WASHER, FLAT, 5/16"ID
- 22200-0 PLUSNUT TOOL

Place barrel of the plusnut body in sheet metal thru hole until flange is flush with sheet metal.

Using a 9/16" combination wrench of plusnut tool body and a second hand wrench, ratchet, or air tool, rotate the hex bolt head CW to draw plus nut flanges up (set the plusnut).

Remove hex bolt, washer, and plusnut. Inspect installation.

PARTS YOU WILL USE FOR STEP 04	DC6, 6"WIDE NUMBER WILL VARY PER DRAWER SYSTEM	DC12, 12" WIDE NUMBER WILL VARY PER DRAWER SYSTEM	31154-0, CAM SREW DC (4) REQUIRED PER 2 DC UNITS	

Instructions for Step 04 DRAWER SYSTEM ASSEM

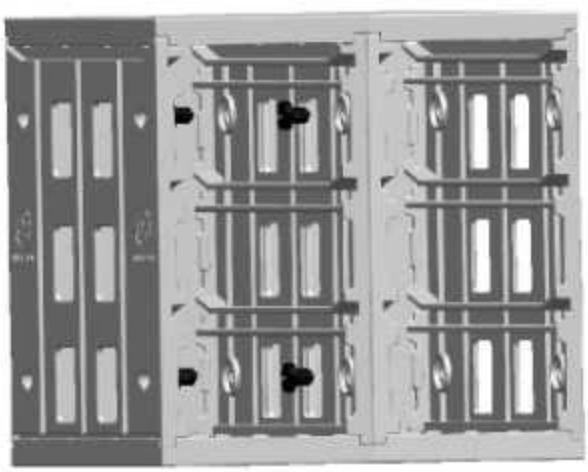

Remove drawers from units

Insert (4) 31154-0

To lock cam screws into place use large bladed standard (flat) screw driver to turn cam screws 1/4 turn so they lock in to place.

Repeat until all units are assembled together.

Do not replace drawers at this time

PARTS YOU WILL USE FOR STEP 05	FAS0063, SCREW, HEX 1/4-20 X .75 (4) REQUIRED	FAS0067, WASHER, FLAT 1/4 (8) REQUIRED	FAS0058, NUT, NYLOCK 1/4-20 (4) REQUIRED	

Instructions for Step 05 INSTALLING (1) UNIT

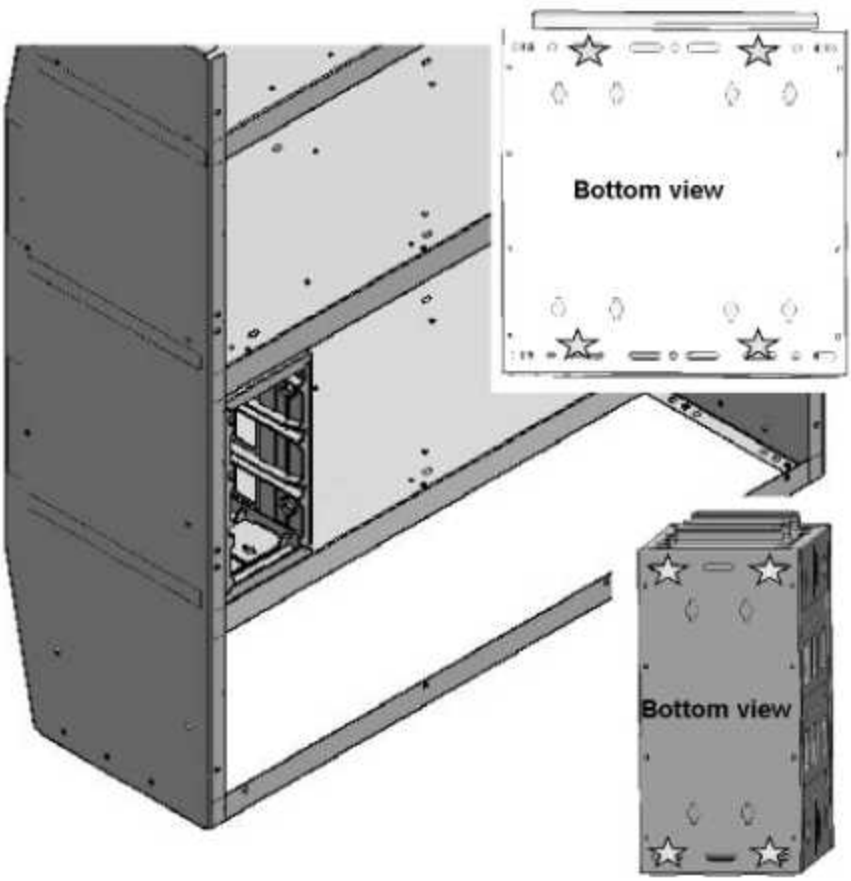

Place the unit on the shelf in desired position

Check to see if unit holes line up with holes in shelf.

If no holes line up mark (4) places using starred holes shown to left.

Remove unit from shelf

Drill marked locations with 5/16" drill.

Clean up debris

Reposition unit on shelf

Install fasteners. Making sure to place (1) flat washer between head of screw and dc unit, and one between nut and bottom of shelf.

Reinstall drawers into unit

PARTS YOU WILL USE FOR STEP 06	FAS0063, SCREW, HEX 1/4-20 X .75 QTY. WILL VARY	FAS0067, WASHER, FLAT 1/4 QTY. WILL VARY	FAS0058, NUT, NYLOCK 1/4-20 QTY. WILL VARY	

Instructions for Step 06 installing system

Place the drawer system on the shelf in desired position

Check to see if holes line up with holes in shelf.

If no holes line up mark (2) places per unit using starred holes shown to left.

Remove system from shelf

Drill marked locations with 5/16" drill.

Clean up debris

Reposition system on shelf

Install fasteners. Making sure to place (1) flat washer between head of screw and dc unit, and one between nut and bottom of shelf.

Reinstall drawers into system