ADRIAN STEEL
Cargo Management Solutions for Commercial Vehicles

BACK PANEL KIT, SL, HR 72

PRODUCT WEIGHT

9.02 LBS

WIDTH X DEPTH X HEIGHT

72" X 5" X 48"

CAPACITY

N/A

COLOR

BLACK

CATALOG NUMBER

BPKSL7268

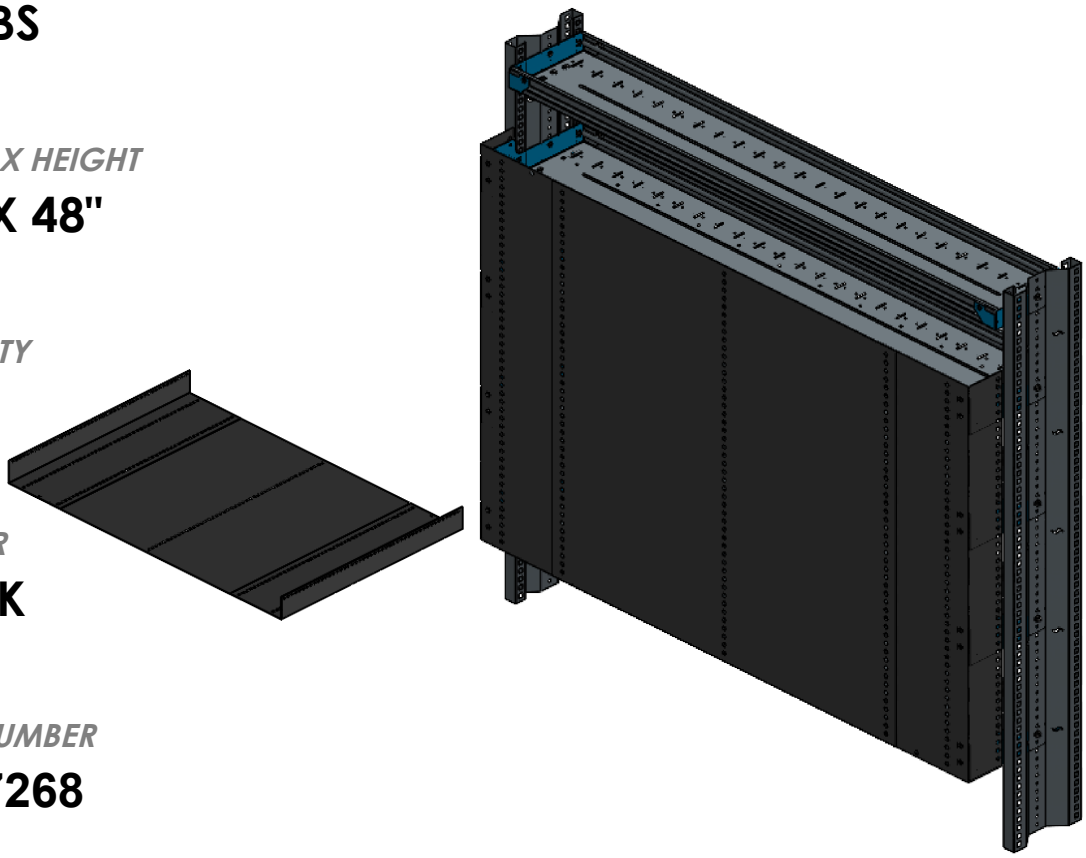

PRODUCT FEATURES

For additional object retention on the next gen shelving units, use our add-on back panels. They attach to the rear overhanging end caps and shelves using quick, push-in rivets. The HDPE (High Density Polyethylene) panels are quiet and suitable for years of abuse. These panels are meant for use with our HIGH-roof vans using 68" end panels and 72" wide shelves. Back panels keep options from falling off the rear of the shelving units where they can damage the unprotected van wall or become hidden from the technician.

THIS DOCUMENT LISTS THE PRODUCT STRUCTURE OF THE BACK PANEL KITS

BACK PANEL PRODUCT LINE

TO VIEW INSTRUCTIONS OF HOW TO ASSEMBLE BACK PANEL KITS TO SHELVING UNITS, PLEASE REFER TO PART#: INS-BPK

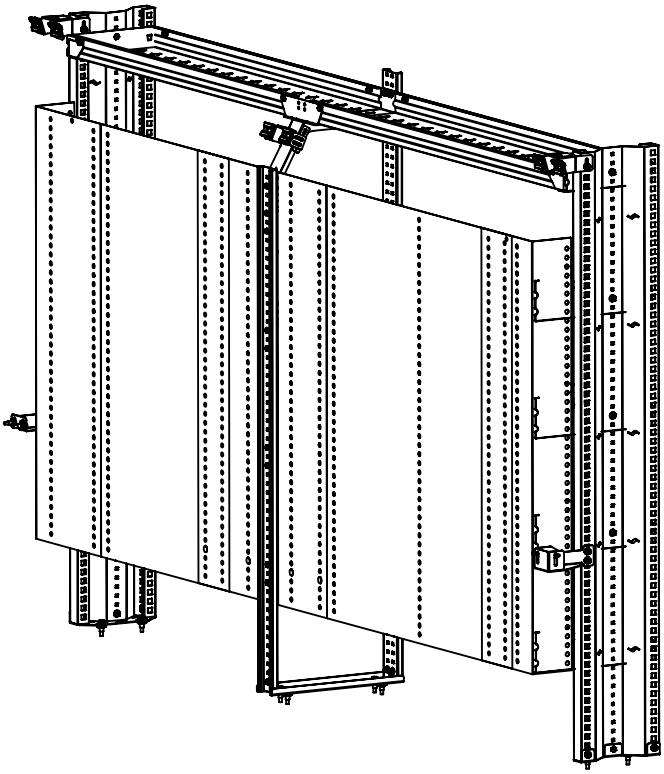

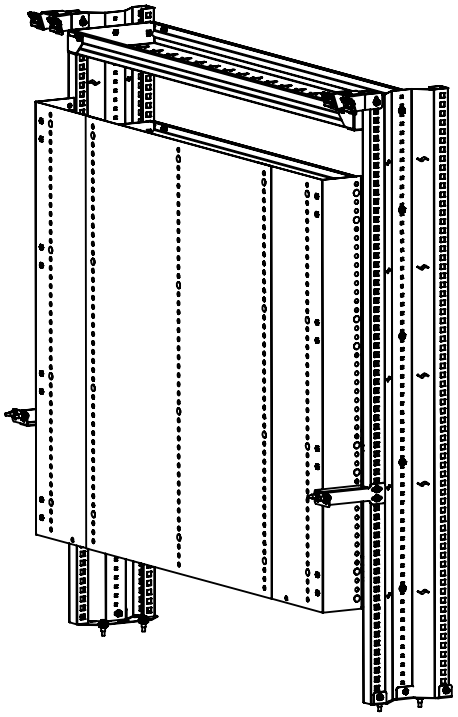

STANDARD SHELVING BACK PANEL KITS

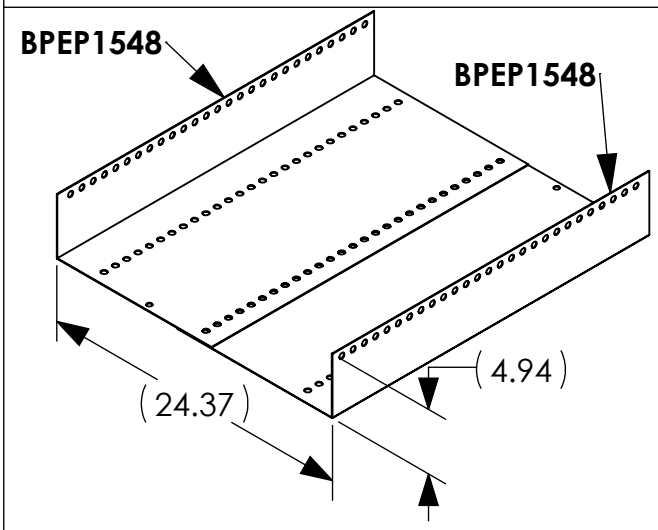

BPKSL2448

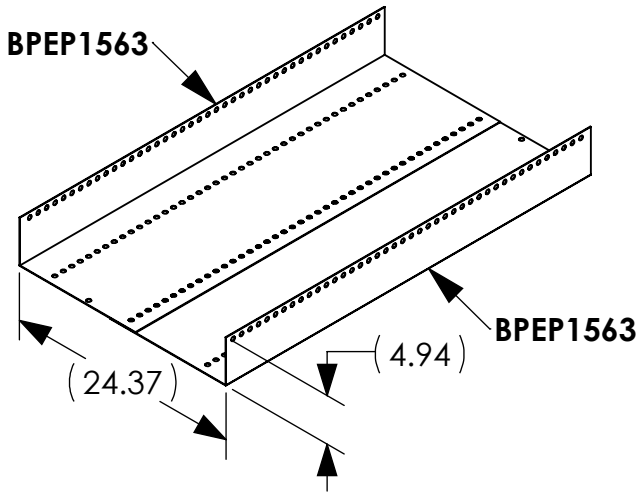

BPKSL2463

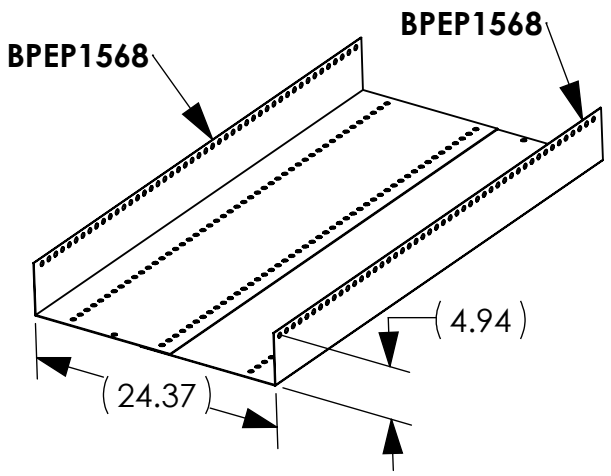

BPKSL2468

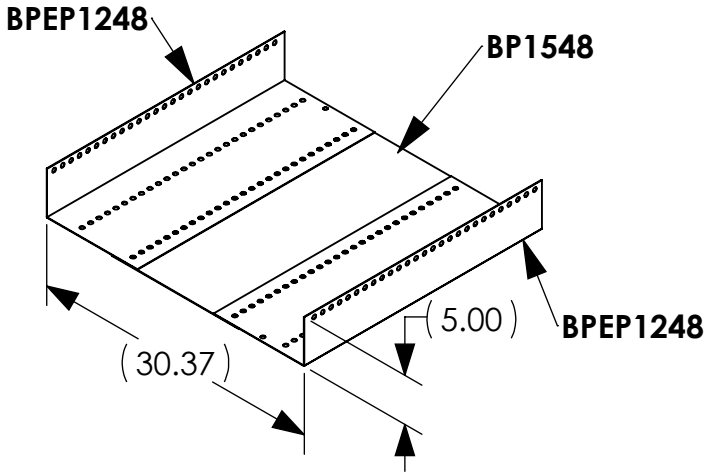

BPKSL3048

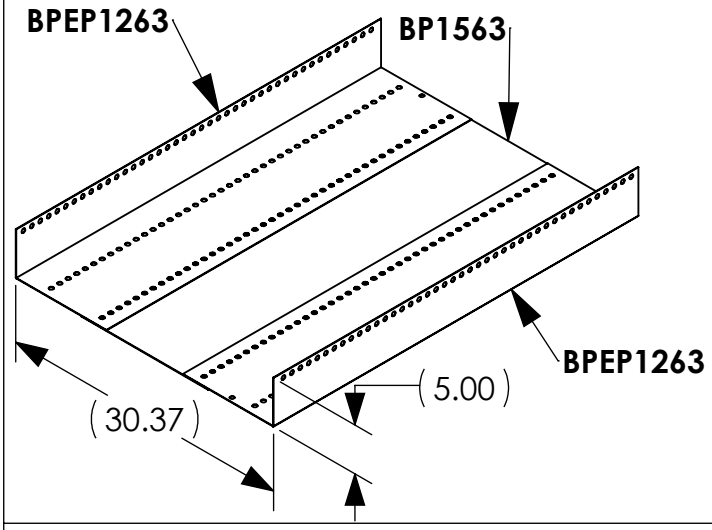

BPKSL3063

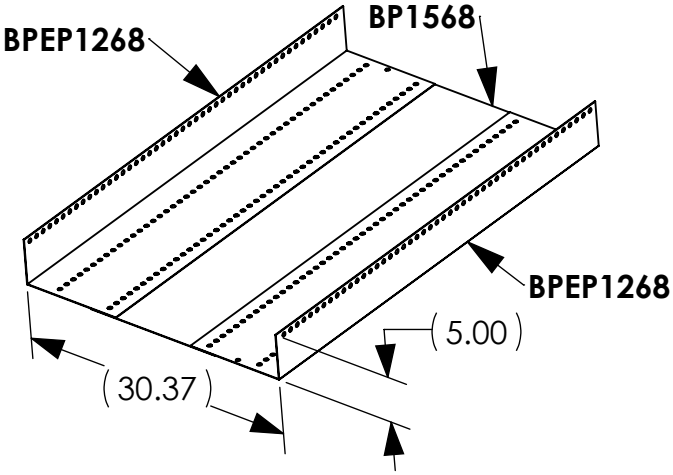

BPKSL3068

STANDARD SHELVING BACK PANEL KITS

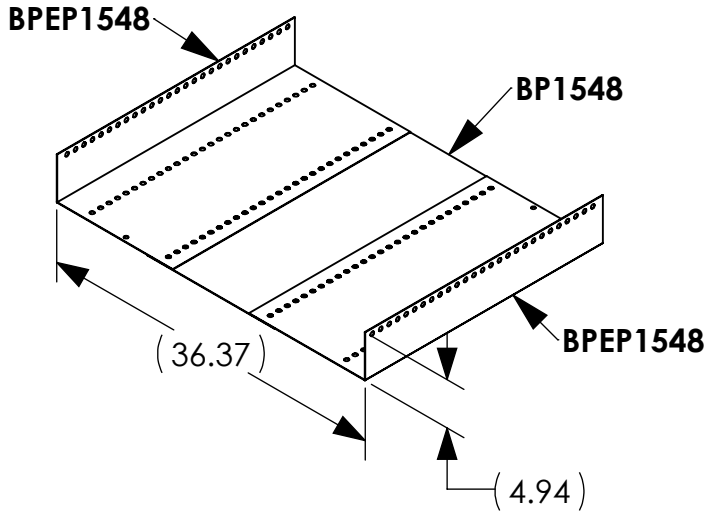

BPKSL3648

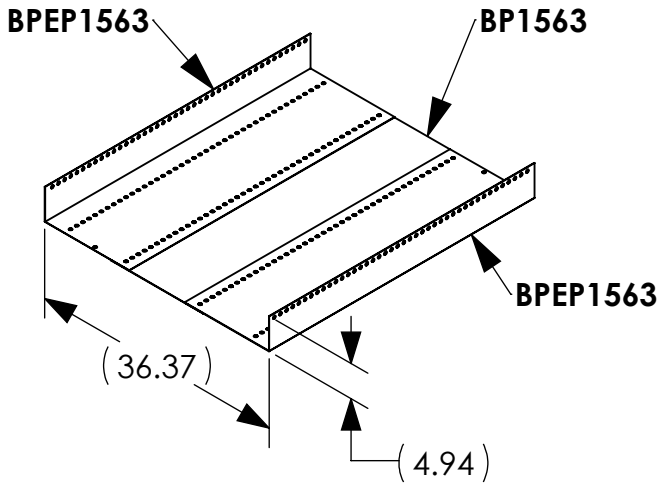

BPKSL3663

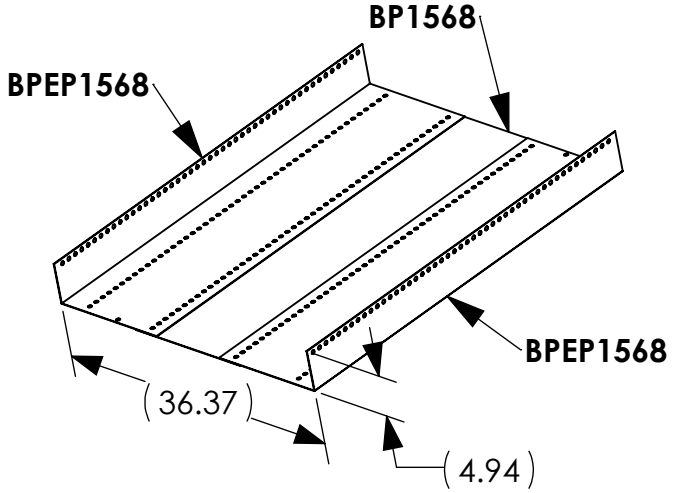

BPKSL3668

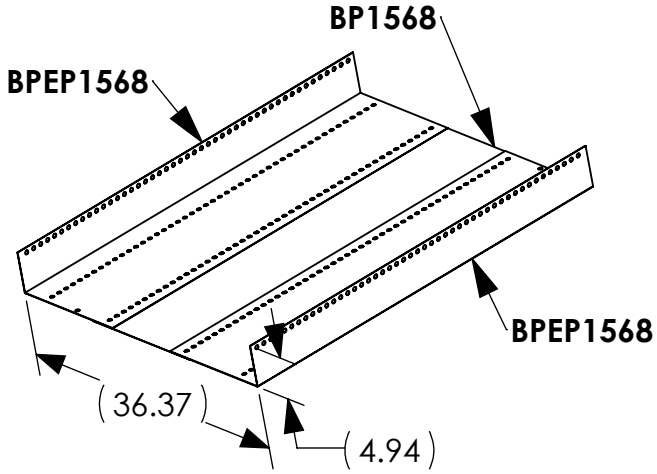

BPKSL4248

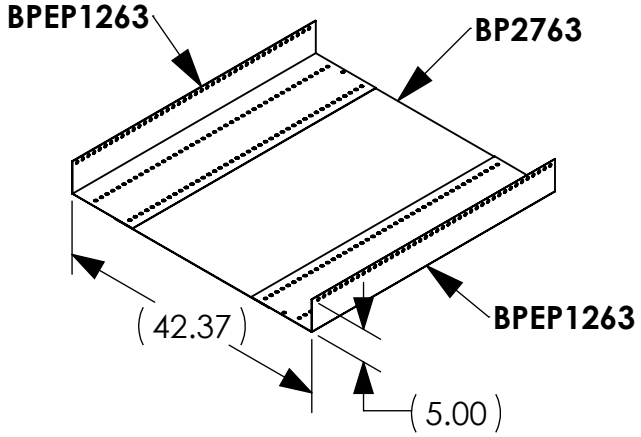

BPKSL4263

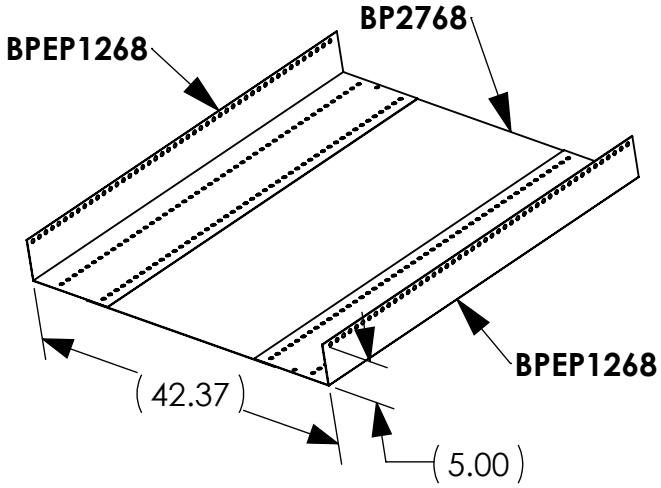

BPKSL4268

STANDARD SHELVING BACK PANEL KITS

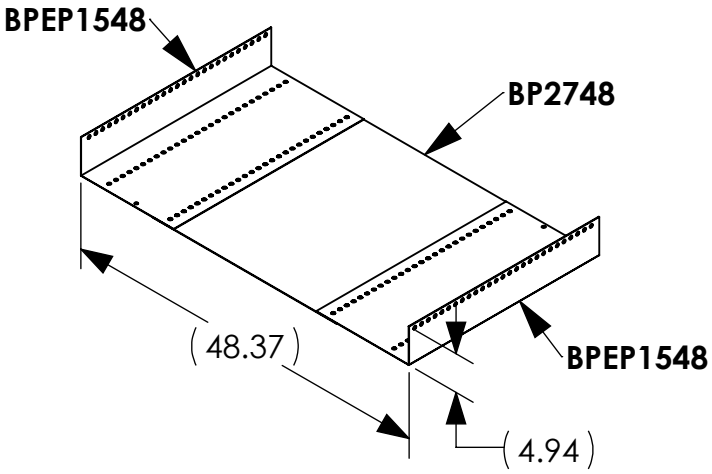

BPKSL4848

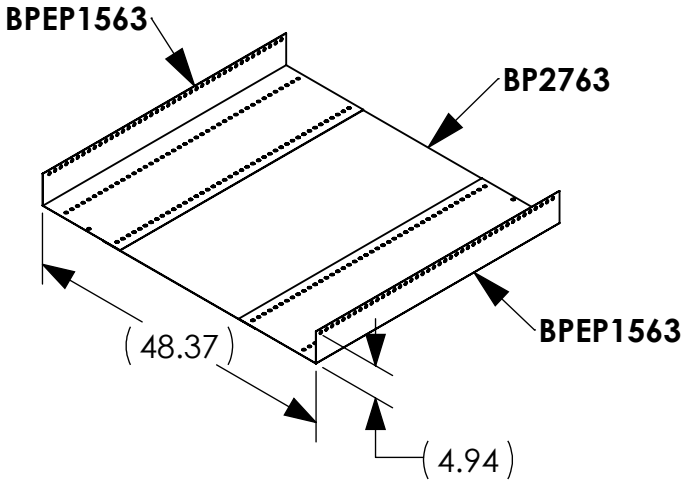

BPKSL4863

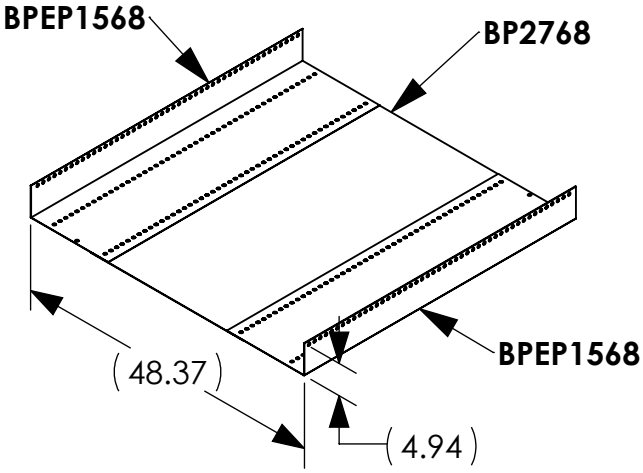

BPKSL4868

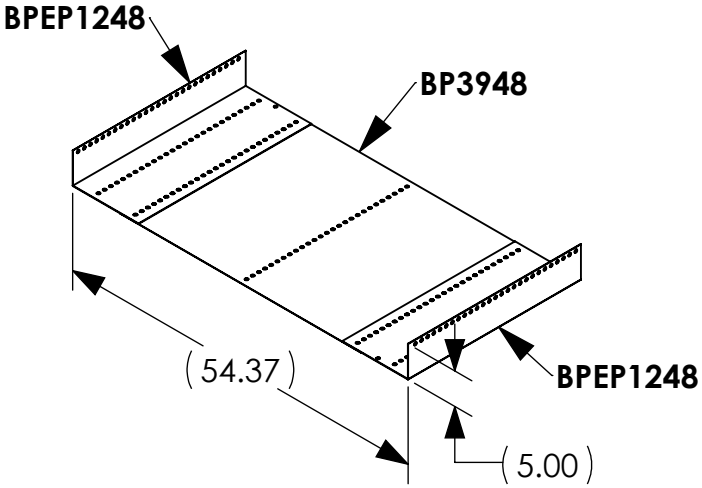

BPKSL5448

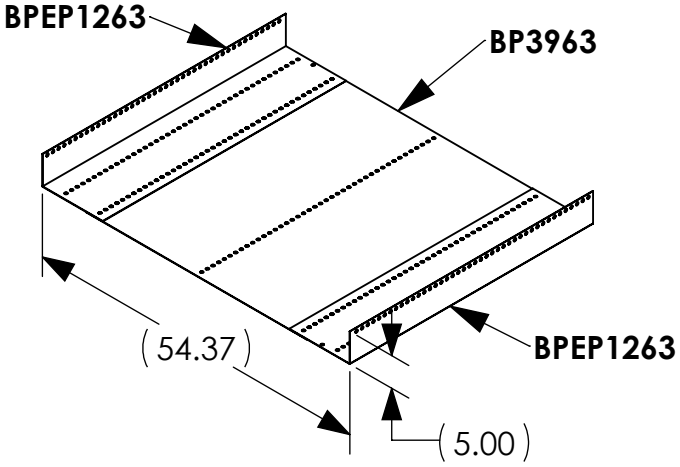

BPKSL5463

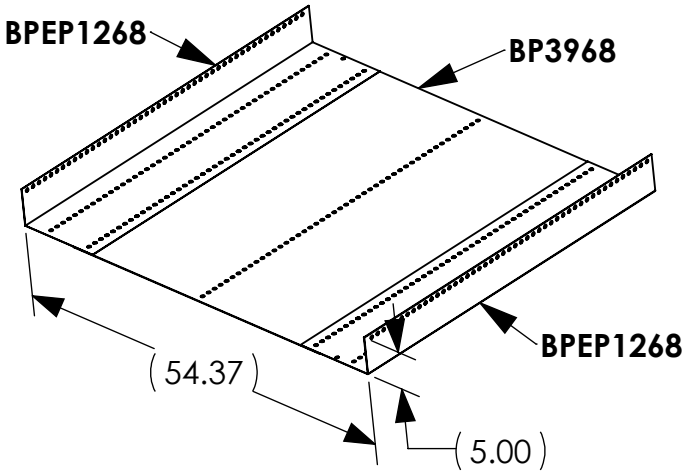

BPKSL5468

STANDARD SHELVING BACK PANEL KITS

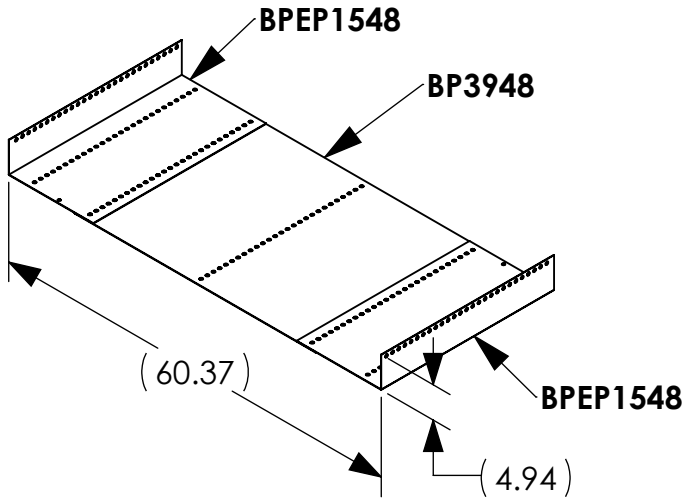

BPKSL6048

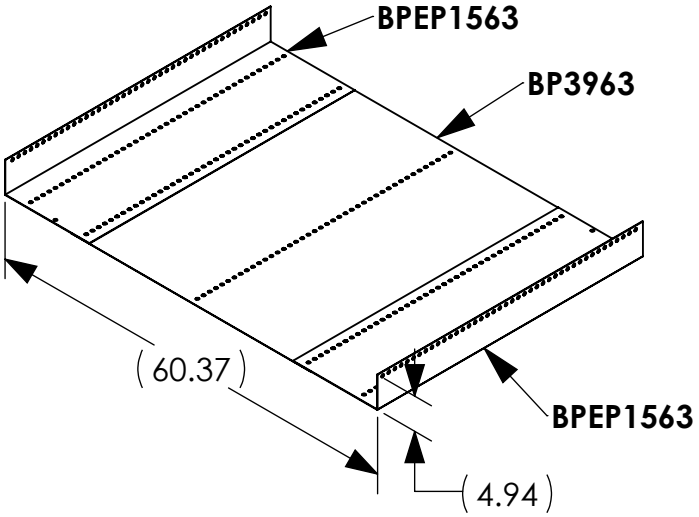

BPKSL6063

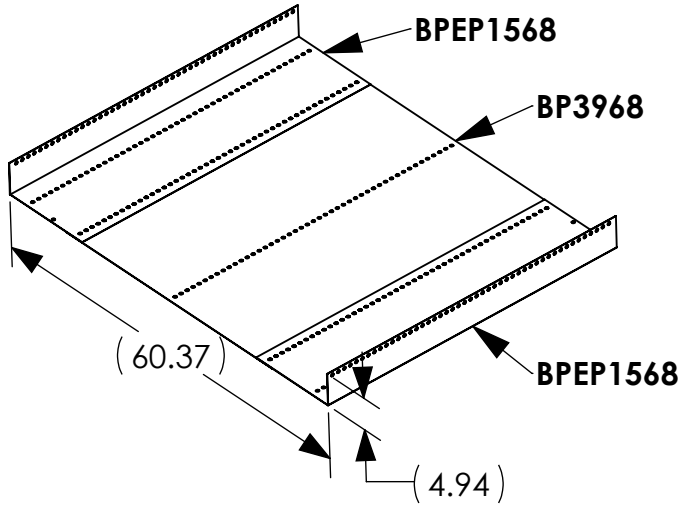

BPKSL6068

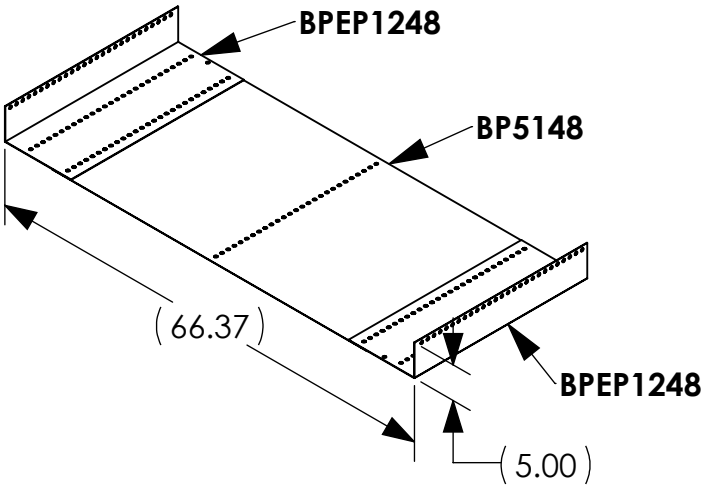

BPKSL6648

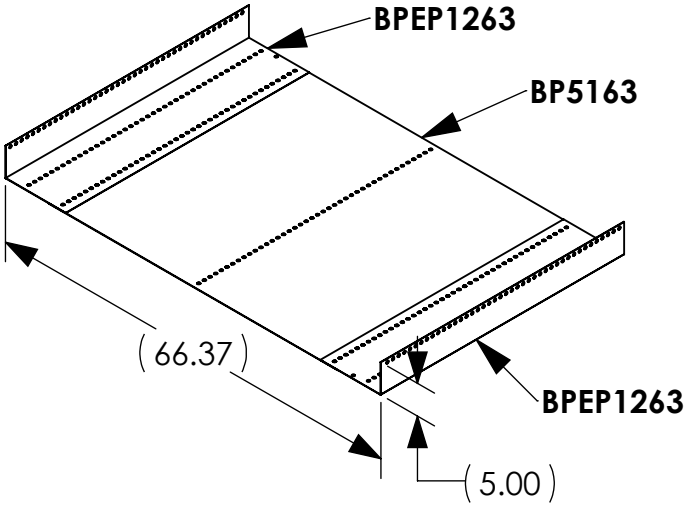

BPKSL6663

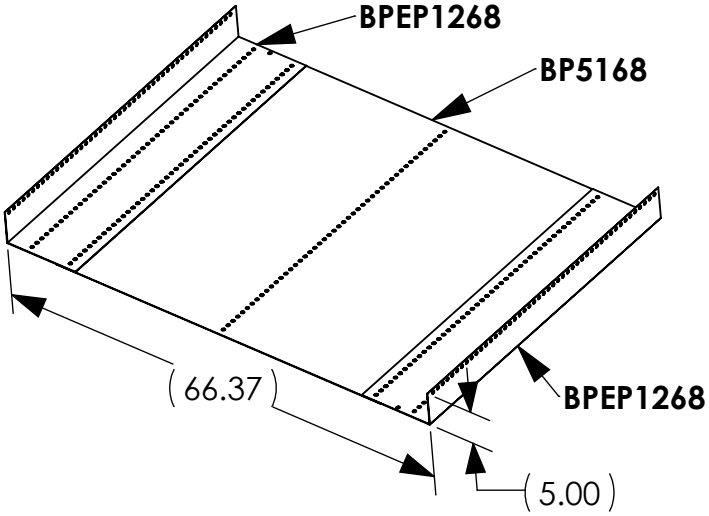

BPKSL6668

STANDARD SHELVING BACK PANEL KITS

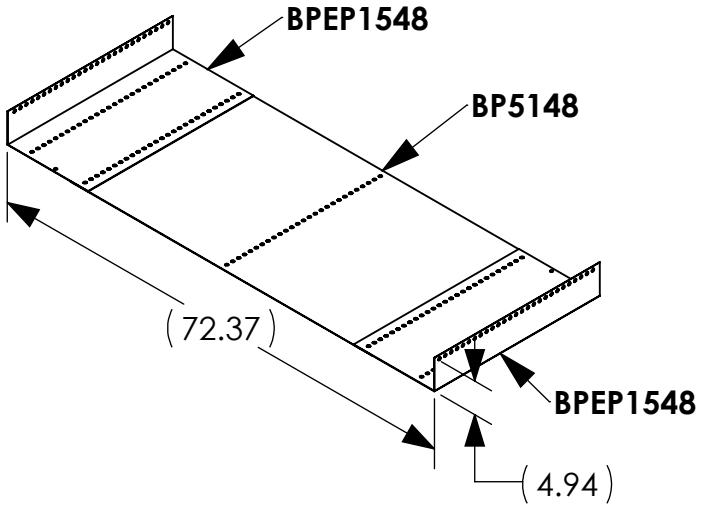

BPKSL7248

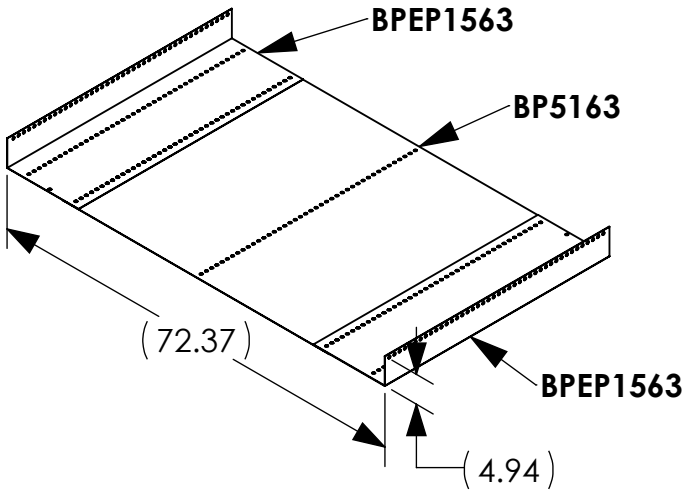

BPKSL7263

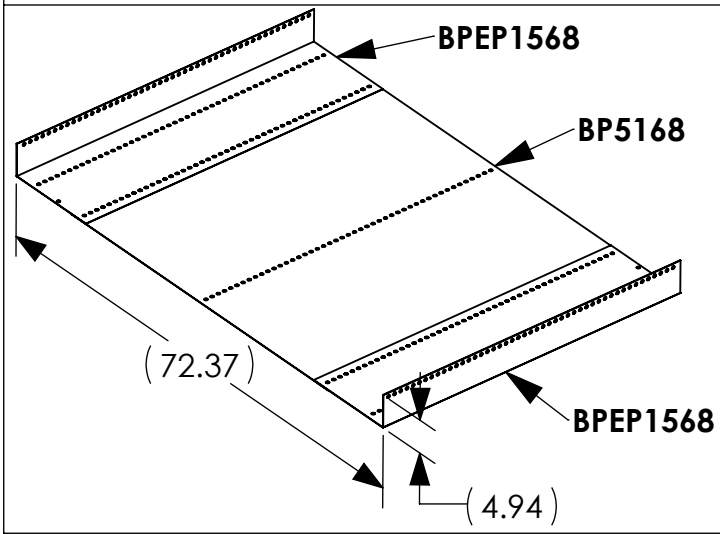

BPKSL7268

FULL LENGTH SHELVING BACK PANEL KITS

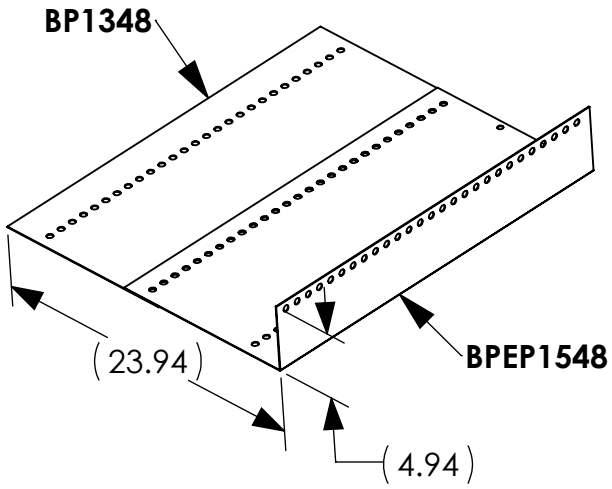

BPKFL2448

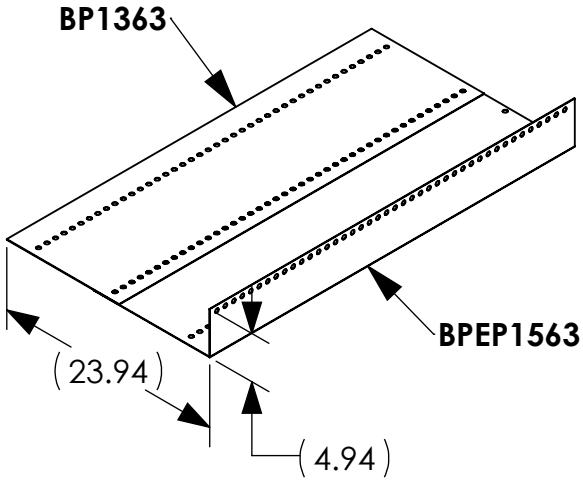

BPKFL2463

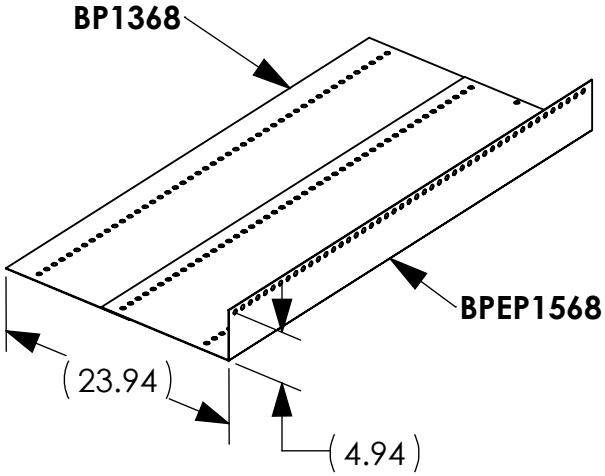

BPKFL2468

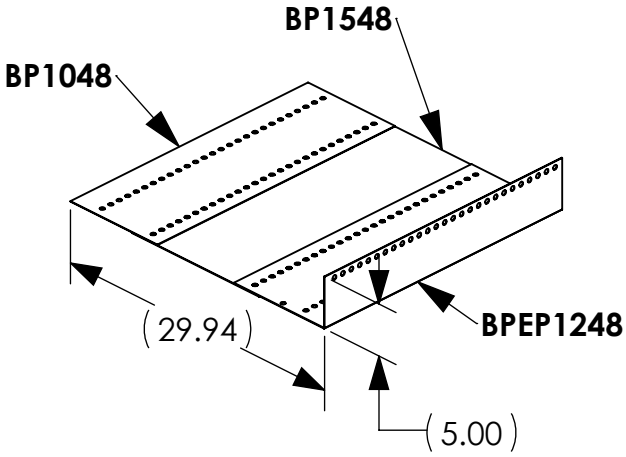

BPKFL3048

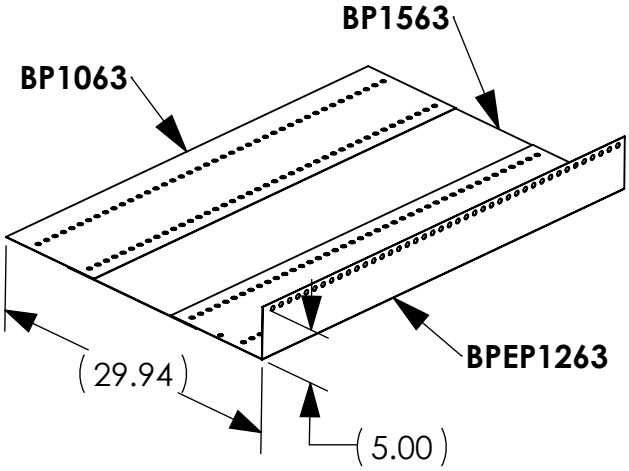

BPKFL3063

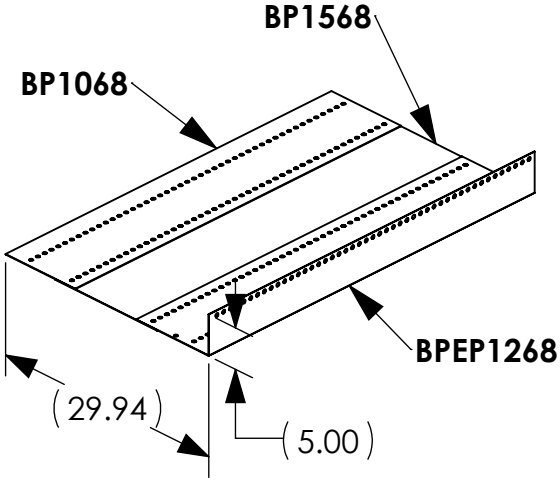

BPKFL3068

FULL LENGTH SHELVING BACK PANEL KITS

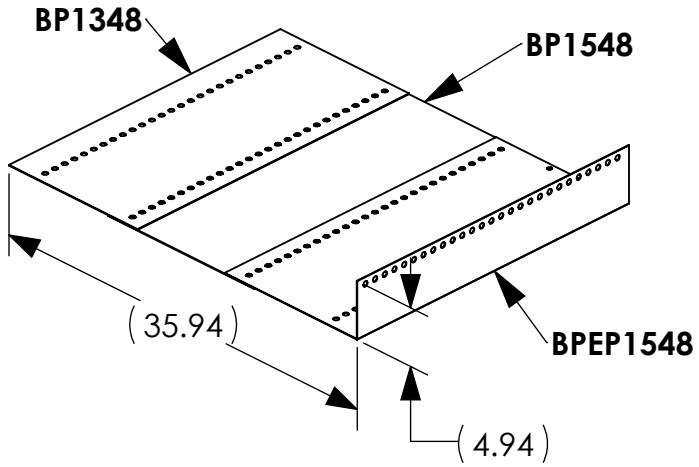

BPKFL3648

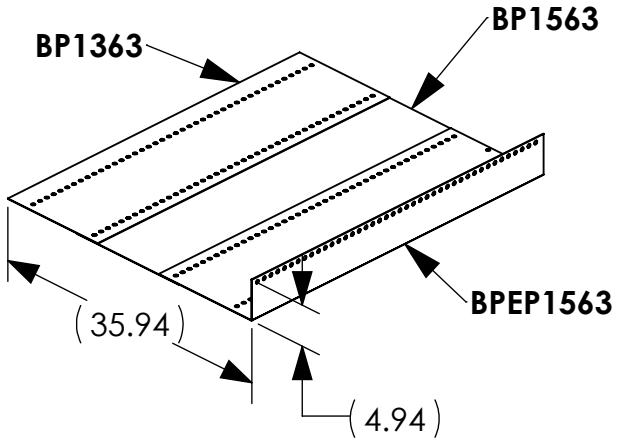

BPKFL36 BP1348 63

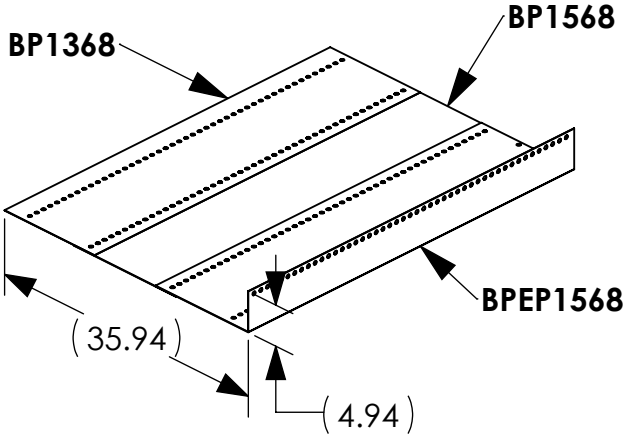

BPKFL368

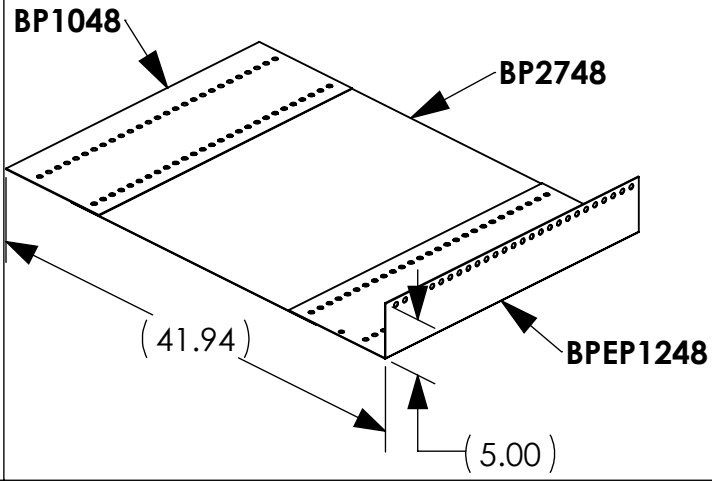

BPKFL4248

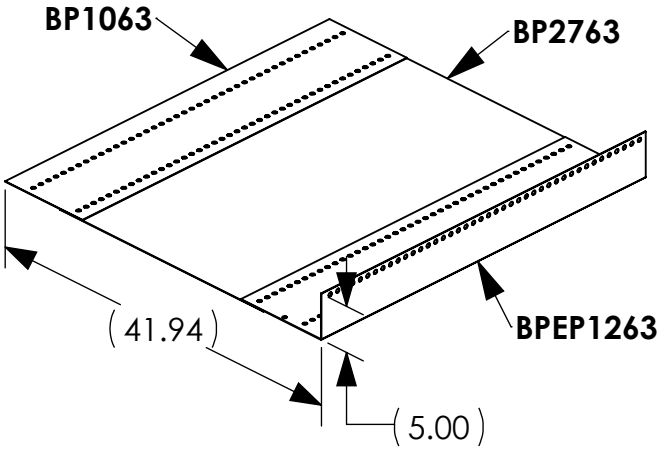

BPKFL4263

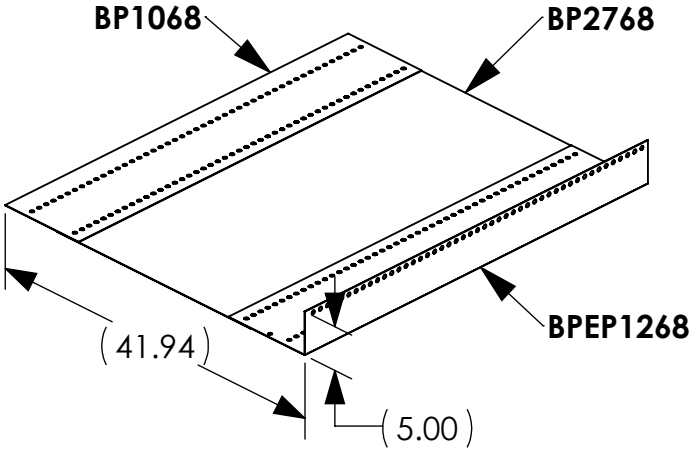

BPKFL4268

FULL LENGTH SHELVING BACK PANEL KITS

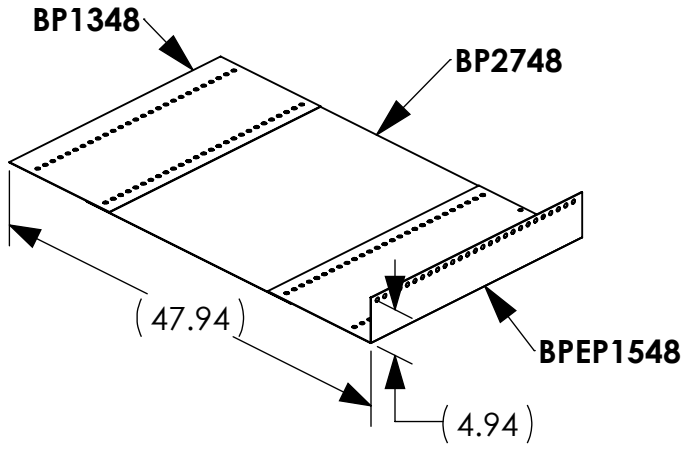

BPKFL4848

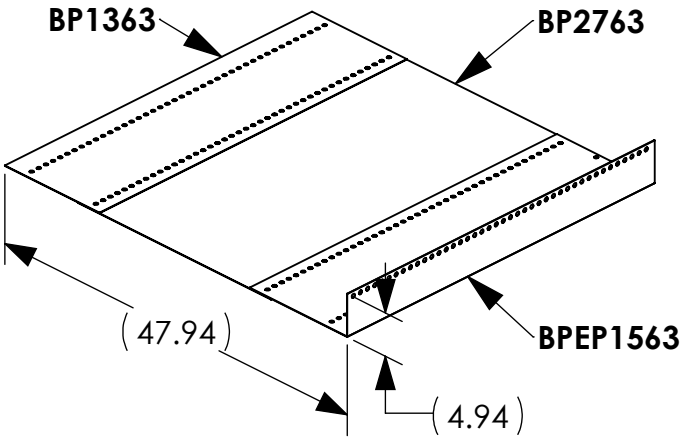

BPKFL4863

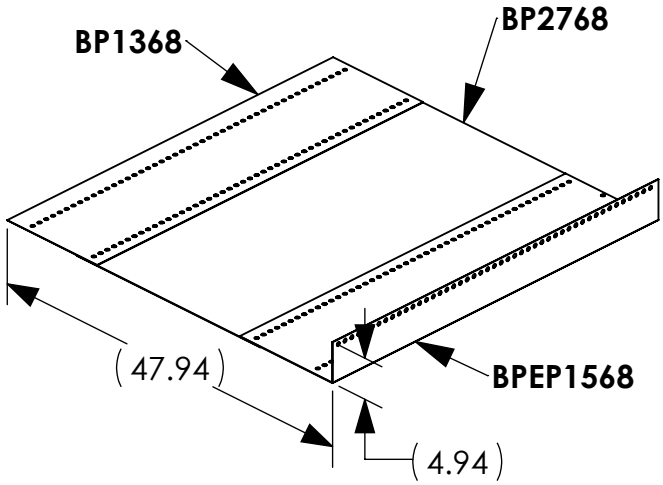

BPKFL4868

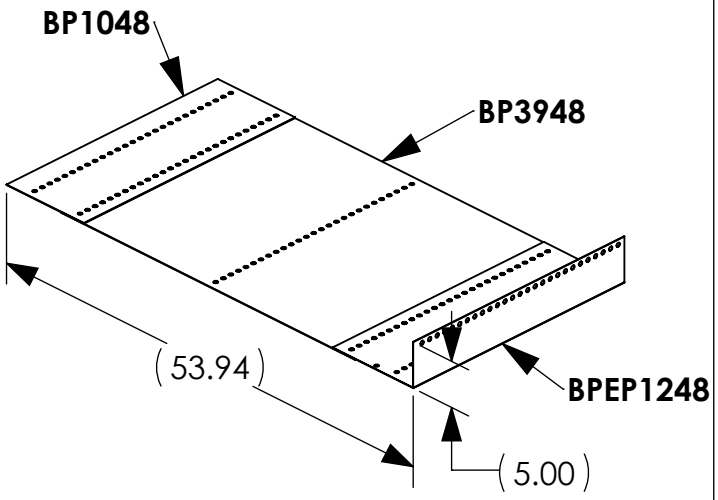

BPKFL5448

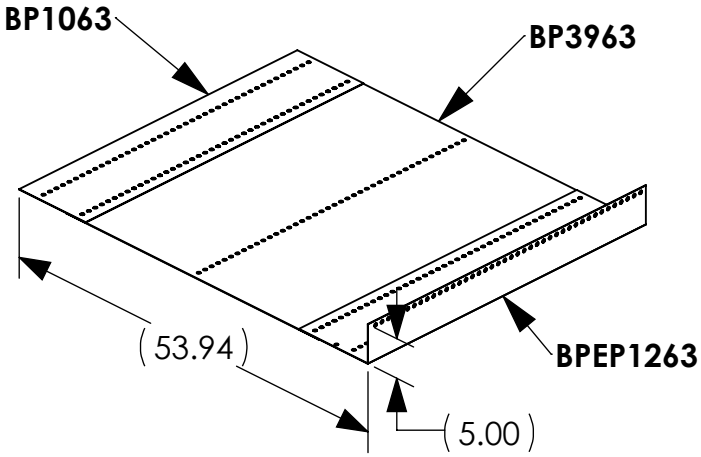

BPKFL5463

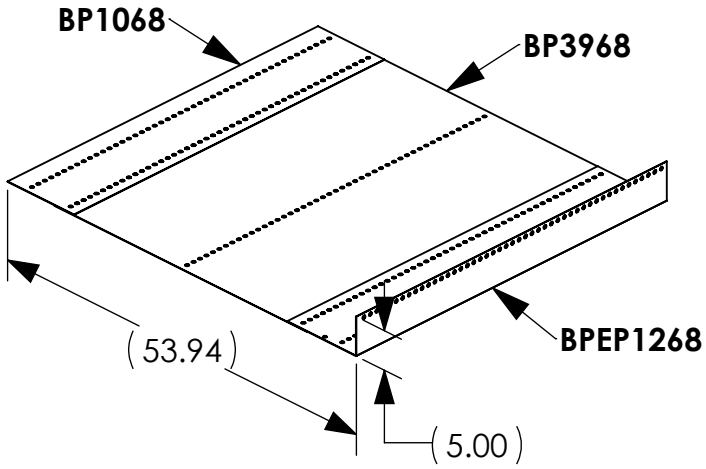

BPKFL5468

FULL LENGTH SHELVING BACK PANEL KITS

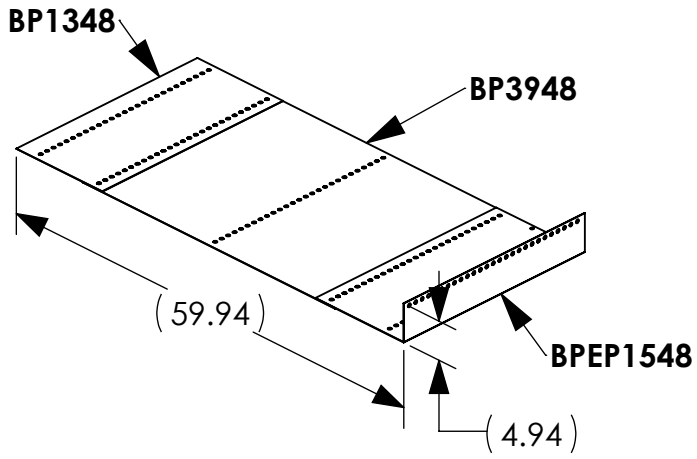

BPKFL6048

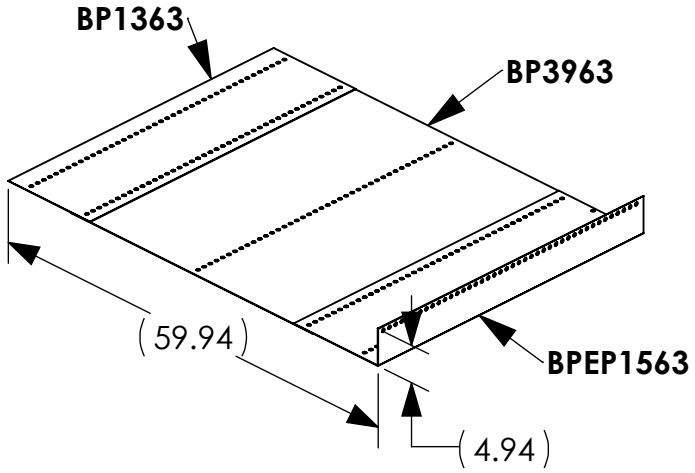

BPKFL6063

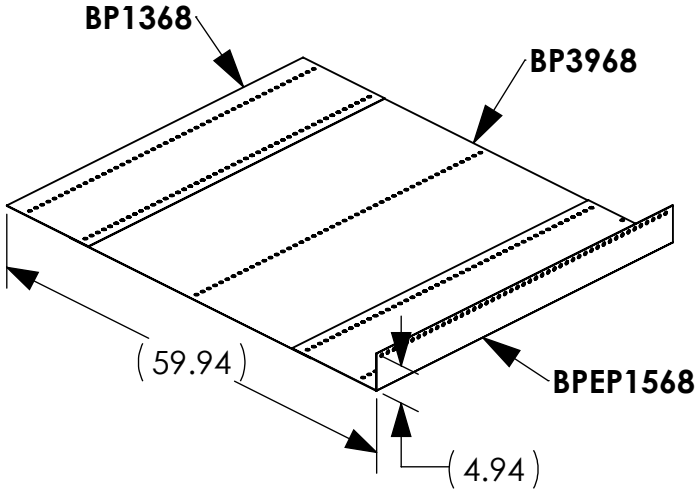

BPKFL6068

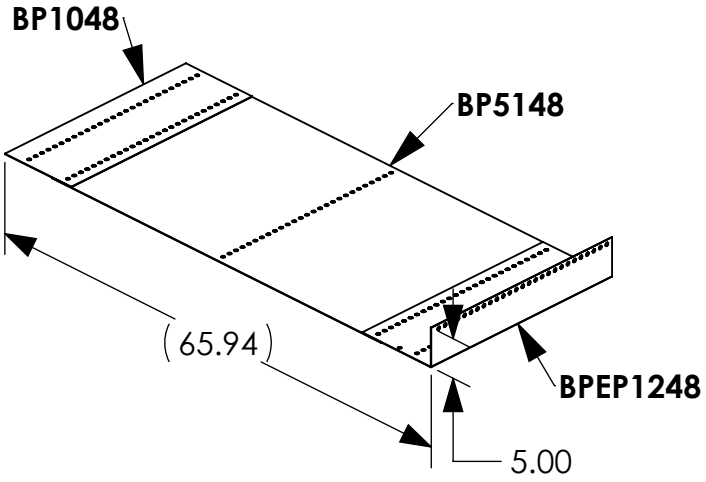

BPKFL6648

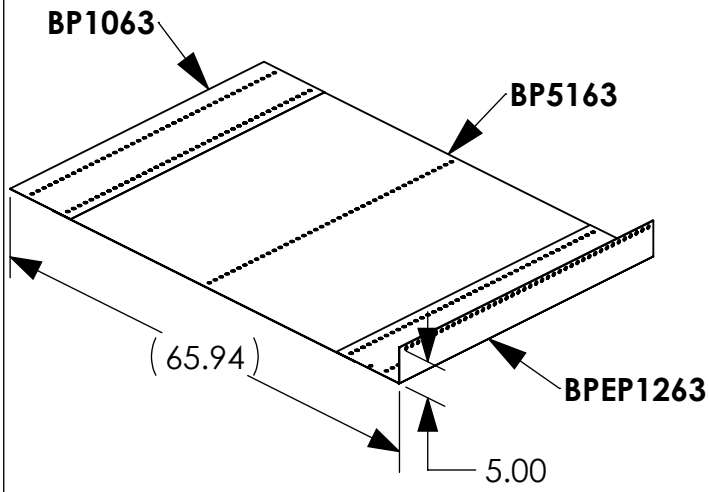

BPKFL6663

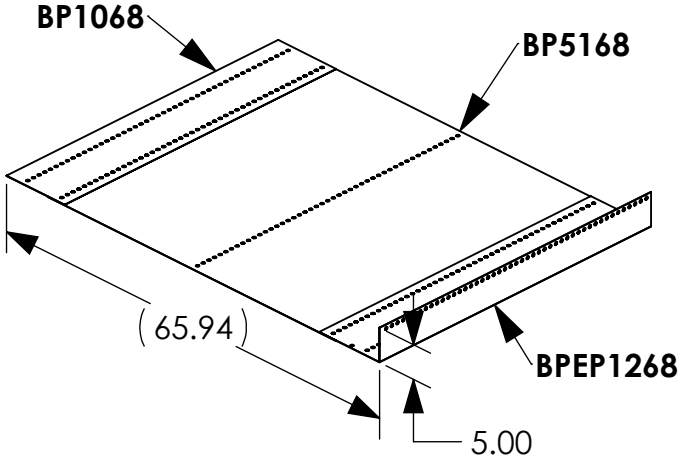

BPKFL6668

FULL LENGTH SHELVING BACK PANEL KITS

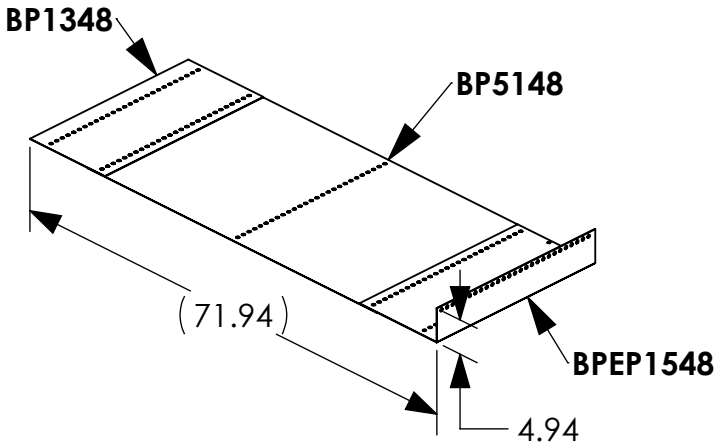

BPKFL7248

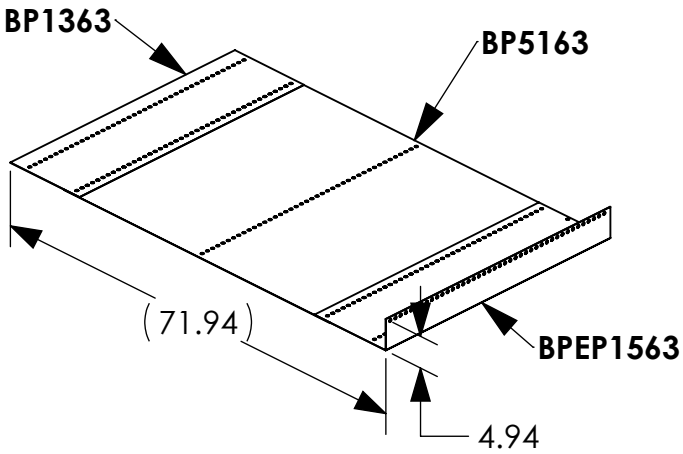

BPKFL7263

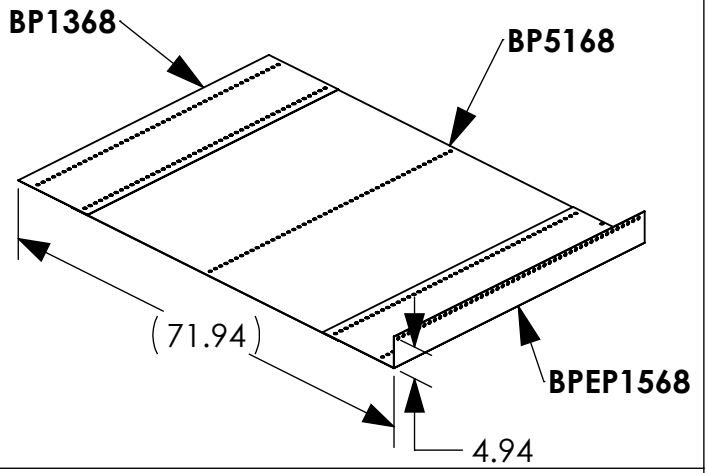

BPKFL7268

INSTR. NUMBER : INS-BPK	PG: 1	REV: B
PART NUMBER : INS-BPK		
PART DESC. • BACK PANEL KIT • INSTRUCTIONS		

THIS INSTRUCTION IS TO DEMONSTRATE THE INSTALLATION OF ADRIAN SHELVING BACK PANEL KITS TO NEXT GEN SHELVING

TO FIND KIT PART NUMBERS AND PRODUCT STRUCTURES OF YOUR SPECIFIC SHELVING UNIT, PLEASE REFER TO PART #: APP-BPK

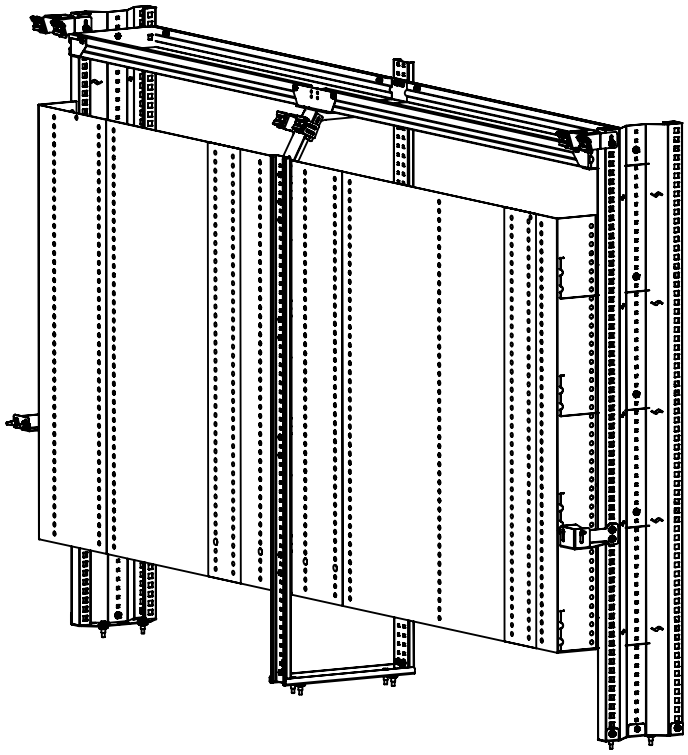

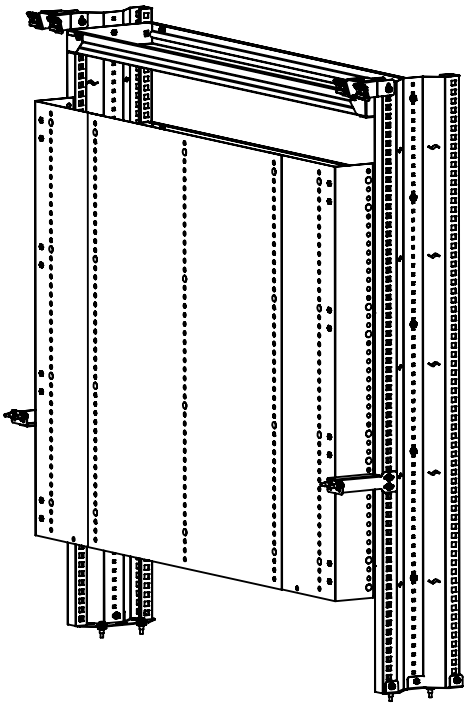

BEST PRACTICES

GET TO KNOW THE VEHICLE - AT THE BEGINNING OF ANY INSTALLATION, CHECK THE LOCATION OF THE FUEL TANK, FUEL LINES, BRAKE LINES, HIGH VOLTAGE BATTERIES AND WIRING HARNESSES TO AVOID INJURY OR PROPERTY DAMAGE FROM TOOL CONTACT.

SEAL ALL EXTERIOR HOLES - ALL INSTALLATION HOLES SHOULD BE SEALED WITH BUTYL TAPE OR SILICON TO PREVENT WATER AND EXHAUST GASES FROM ENTERING THE VEHICLE.

CONTROL DRILL DEPTH - TO AVOID DAMAGE TO THE VEHICLE, USE A DRILL STOP OR CLEARED STEP BIT WHEN DRILLING INSTALLATION HOLES.

ALWAYS ADD PRIMER - WHEN ADDING INSTALLATION HOLES BE SURE TO USE A SELF-ETCHING PRIMER TO PREVENT CORROSION, FASTENER FAILURE AND INJURY.

MOUNTING POINTS MUST HAVE METAL-TO-METAL CONTACT - USE PROVIDED MOUNTING SPACERS TO ACCOMMODATE FOR VEHICLE FEATURES, CARPET OR SUBFLOORS.

PROVIDE CLEARANCE FOR SPACERS - IF THE INSTALLATION VEHICLE CONTAINS A CARPET OR SUBFLOOR, USE A 1-3/16" DIAMETER CARPET CUTTER (P/N: 31183-0) AT ALL MOUNTING LOCATIONS TO OPEN UP ROOM FOR SPACERS.

CHECK SPACER ORIENTATION - BE SURE THAT THE INDENT IN THE SPACER COVERS THE PLUSNUT HEAD; THIS ENSURES THE MOST METAL-TO-METAL CONTACT AND REDUCES VIBRATION.

PLUSNUT INSTALLATION - A PLUSNUT GUN IS RECOMMENDED FOR PLUSNUT INSTALLATION FOR ITS PRODUCTION SPEED. HOWEVER, A PLUSNUT SETTING TOOL CAN ALSO BE USED (P/N: 22200-0).

THRU-BOLT CLEARANCE - WHEN USING A THRU-BOLT AT ANY MOUNTING LOCATION, BE SURE THAT YOUR HOLE HAS 1/16" CLEARANCE.

BEST PRACTICE: ORGANIZE ALL FASTENERS & VERIFY THAT ALL ARE ACCOUNTED FOR

PAGE: 3

FASTENERS USED

BAG REFERENCE: **SEE BOM'S BELOW**

BAG80424			
ITEM NO.	PART NUMBER	DESCRIPTION	QTY.
1	FAS1018	RIBBED NYLON INSERT, 1/4, 0.062"-0.372" GR	42

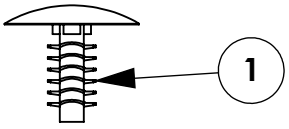

BAG80425			
ITEM NO.	PART NUMBER	DESCRIPTION	QTY.
1	FAS1018	RIBBED NYLON INSERT, 1/4, 0.062"-0.372" GR	35

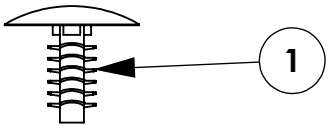

BAG80426			
ITEM NO.	PART NUMBER	DESCRIPTION	QTY.
1	FAS1018	RIBBED NYLON INSERT, 1/4, 0.062"-0.372" GR	28

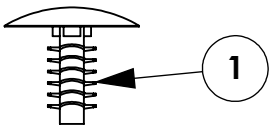

INTENTIONALLY LEFT BLANK

STEP 1 - MOUNT BACK PANELS TO SHELVING UNIT

Step 1.1
PLACE BACK PANELS UP AGAINST SHELVES,

MAKE SURE THAT HOLES SHOWN IS AT THE BOTTOM OF THE PANNELS.

Step 1.2
FOLD BOTH OUTER PANELS AND LINE UP TO HOLES IN SHELVING. PUSH FAS1018 INTO HOLES.

CENTER PANELS TO BE INSTALL IN Step 1.3

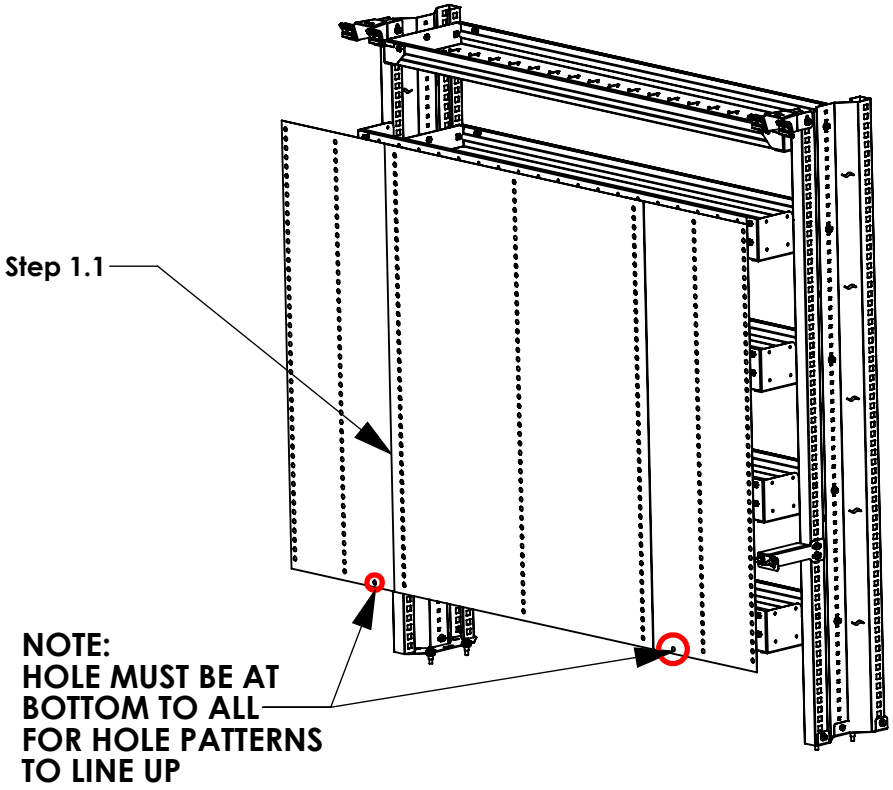

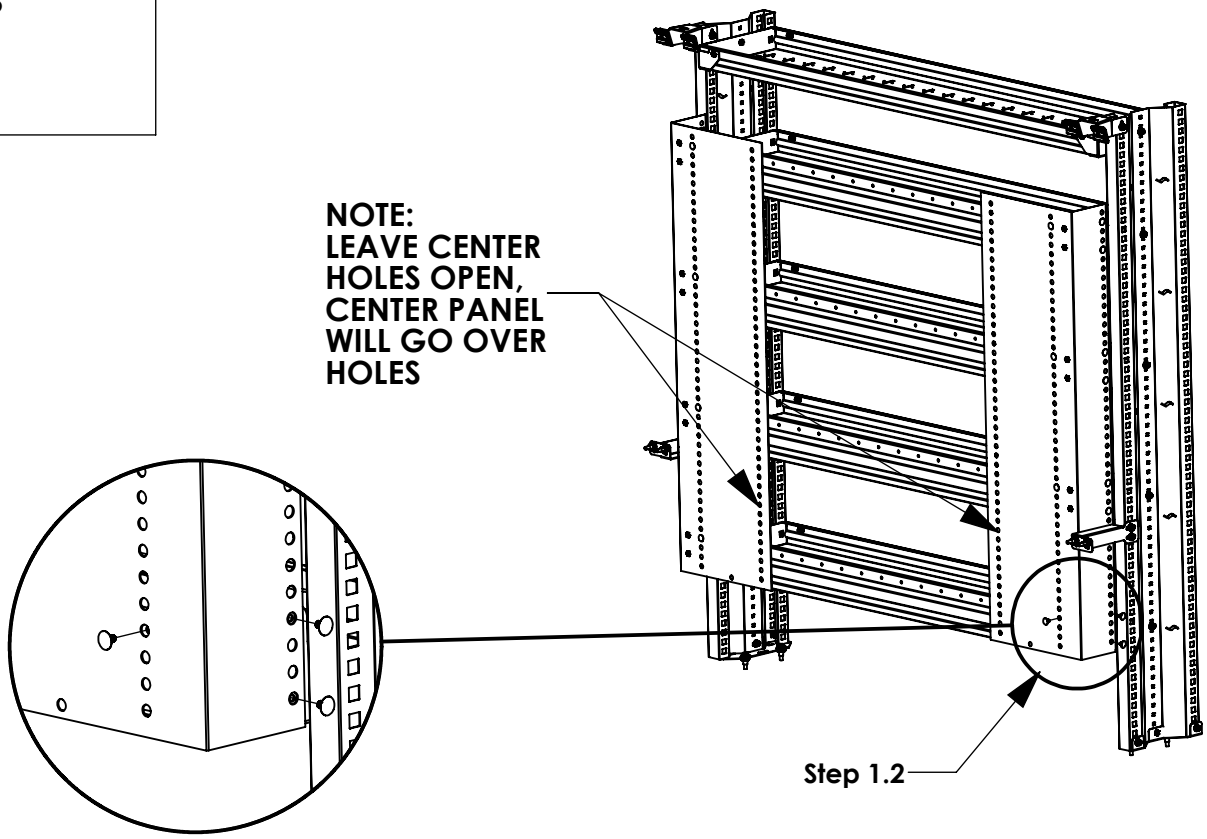

STEP 1 - MOUNT BACK PANELS TO SHELVING UNIT

Step 1.3A
FOR STANDARD BACK PANELS PLACE CENTER PANEL OVER OUTER PANELS AND LINE UP TO HOLES IN SHELVING AND OUTER PANELS. PUSH FAS1018 INTO HOLES

Step 1.3B
FOR SHELVING WITH A CENTER SHELF, PLACE EXTRA PANEL ON BOTH SIDE OF CENTER SUPPORT AND PUCH FAS1018 INTO HOLES

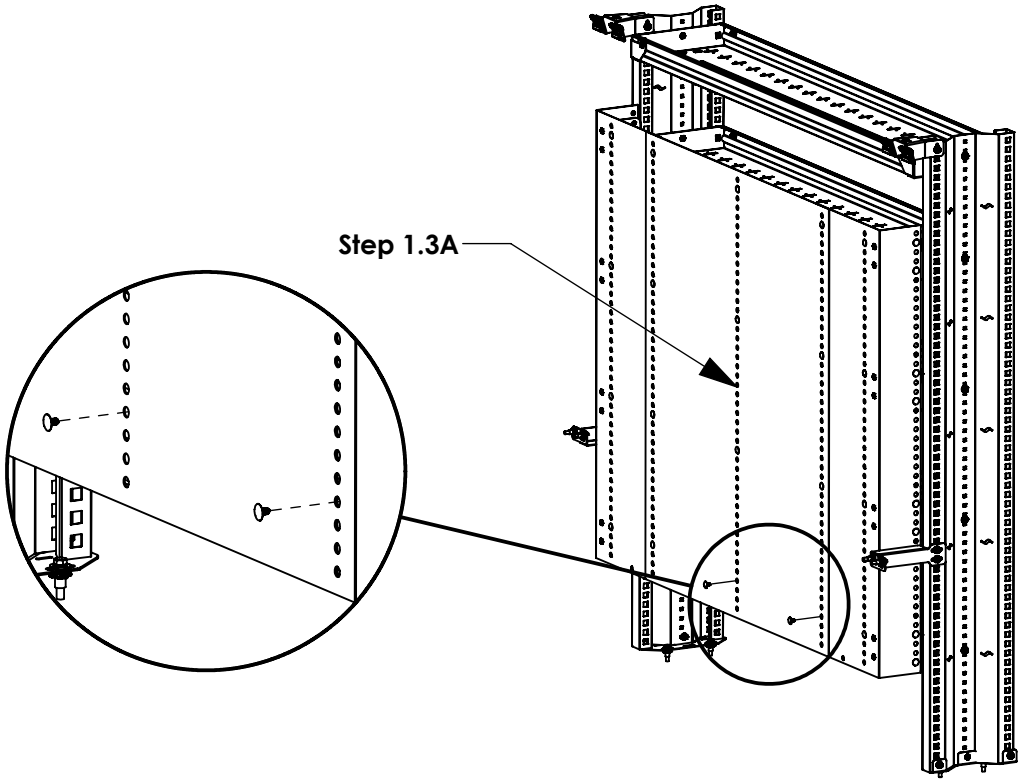

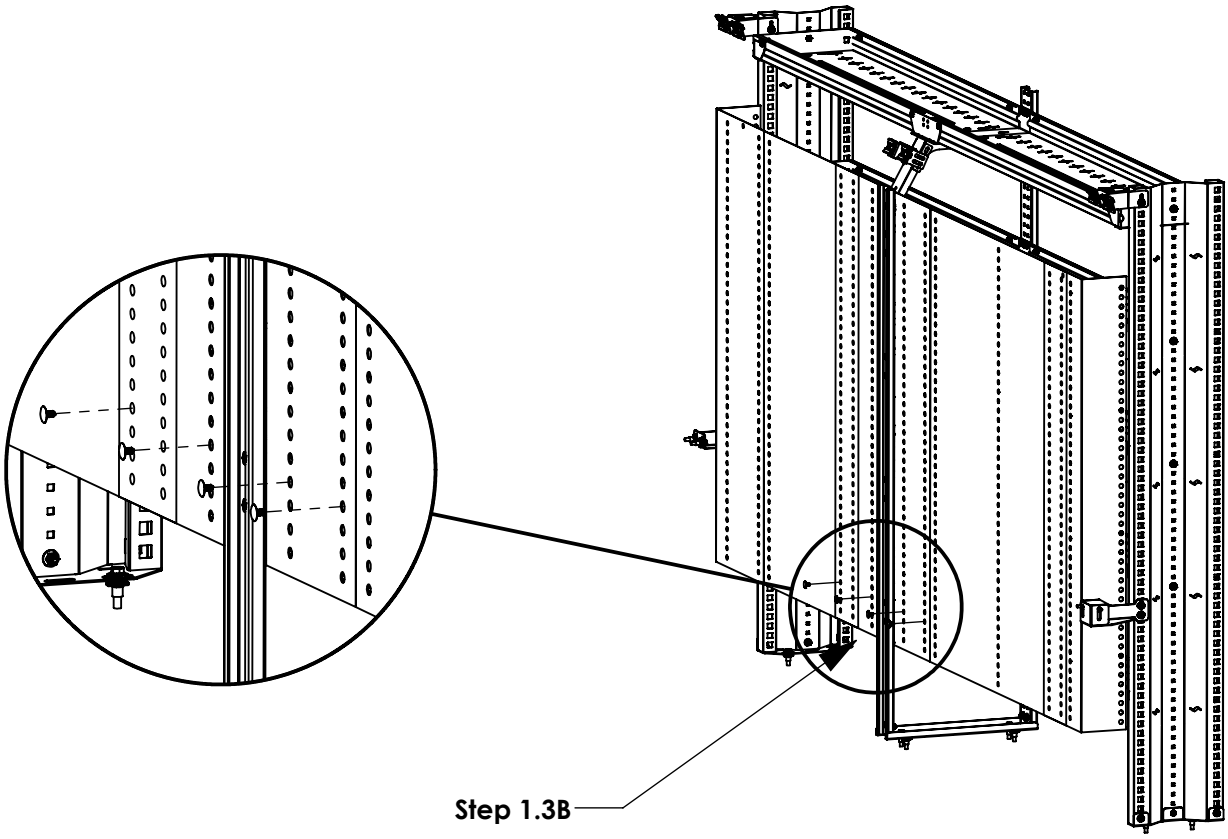

STEP 2 - CLOSING OUT BACK PANELS

Step 2.1
FOR ALL BACK PANELS, LOCATE THE TOP TWO HOLES, AND TWO MORE SLIGHTLY FURTHER DOWN AS NEEDED (SEE IMAGE AT BOTTOM OF PAGE). INSERT 31443-0 INTO THE TWO DESIRED LOCATIONS AND PULL TIGHT.

3-4 LOCATIONS FOR FULL LENGTH UNITS

2 LOCATIONS FOR STANDARD LENGTH UNITS

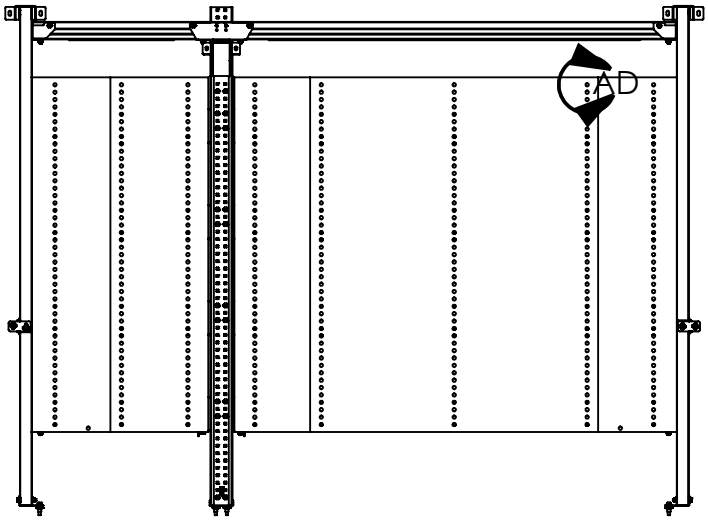

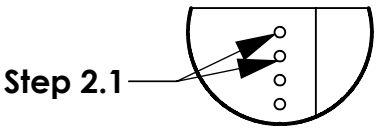

DETAIL AD
SCALE 1 : 8

Step 2.2 ONCE ALL 31443-0 ARE IN PLACE AND FULLY TIGHTENED, CUT REMAINING MATERIAL OFF OF EACH ZIP TIE.

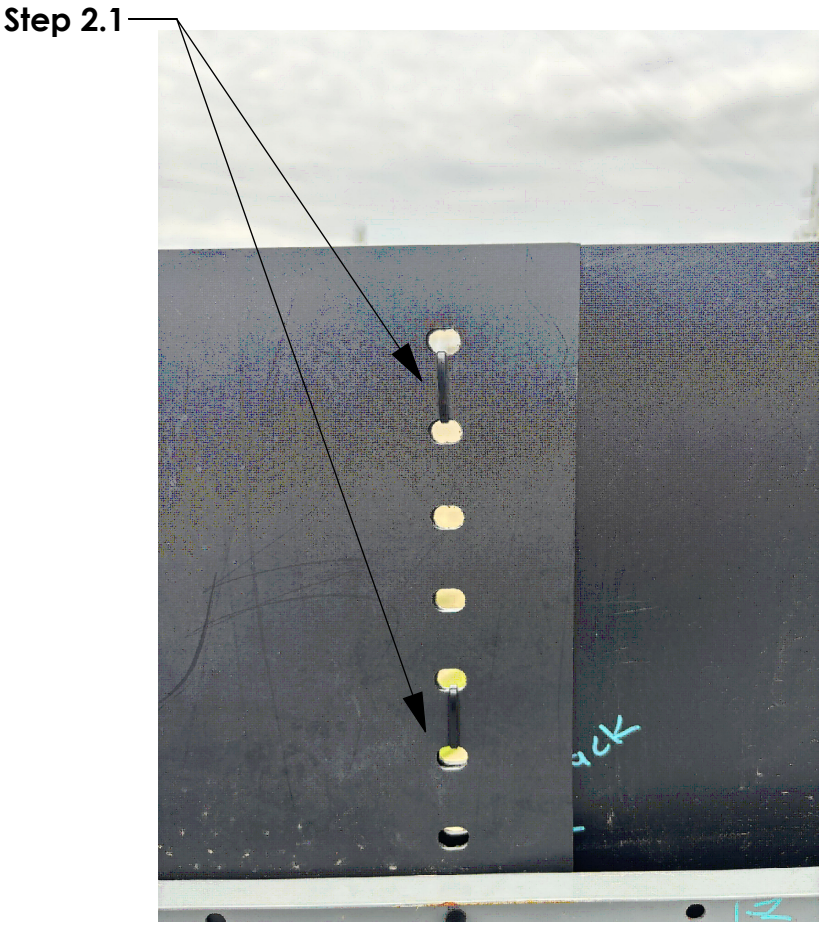

INSTALLATION IS COMPLETE