ADRIAN STEEL
Cargo Management Solutions for Commercial Vehicles

# BACK PANEL KIT, SL, LR 42

*PRODUCT WEIGHT*

**3.46 LBS**

*WIDTH X DEPTH X HEIGHT*

**42" X 5" X 28"**

*CAPACITY*

**N/A**

*COLOR*

**BLACK**

*CATALOG NUMBER*

**BPKSL4248**

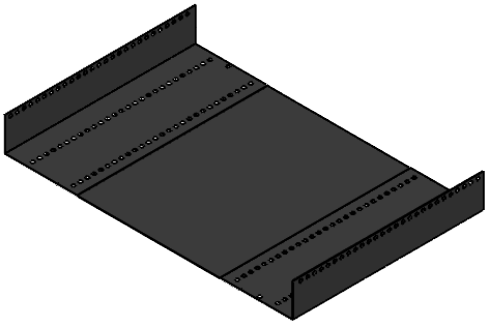

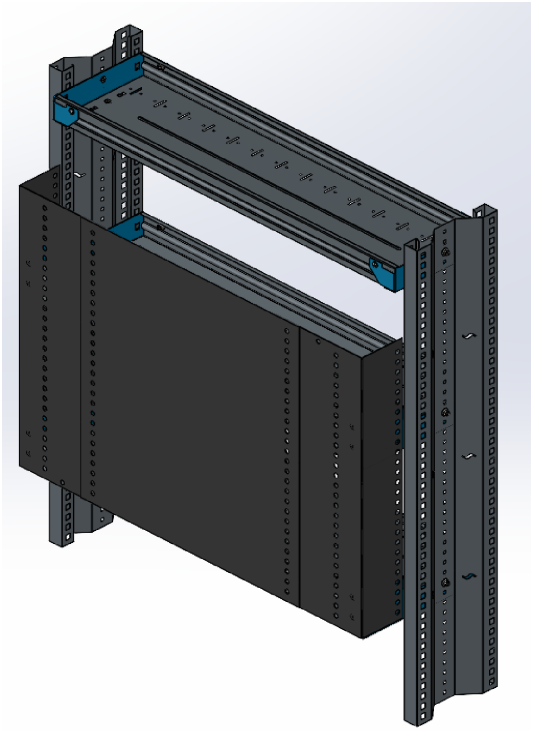

## PRODUCT FEATURES

**For additional object retention on the next gen shelving units, use our add-on back panels. They attach to the rear overhanging end caps and shelves using quick, push-in rivets. The HDPE (High Density Polyethylene) panels are quiet and suitable for years of abuse. These panels are meant for use with our LOW-roof vans using 48" end panels and 42" wide shelves. Back panels keep options from falling off the rear of the shelving units where they can damage the unprotected van wall or become hidden from the technician.**

**THIS DOCUMENT LISTS THE PRODUCT STRUCTURE OF THE BACK PANEL KITS**

# BACK PANEL PRODUCT LINE

**TO VIEW INSTRUCTIONS OF HOW TO ASSEMBLE BACK PANEL KITS TO SHELVING UNITS, PLEASE REFER TO PART#: INS-BPK**

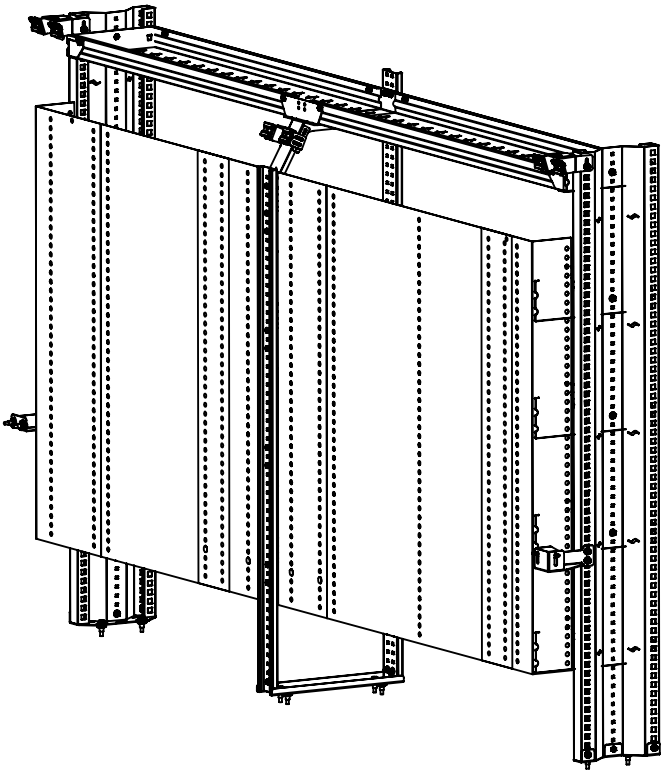

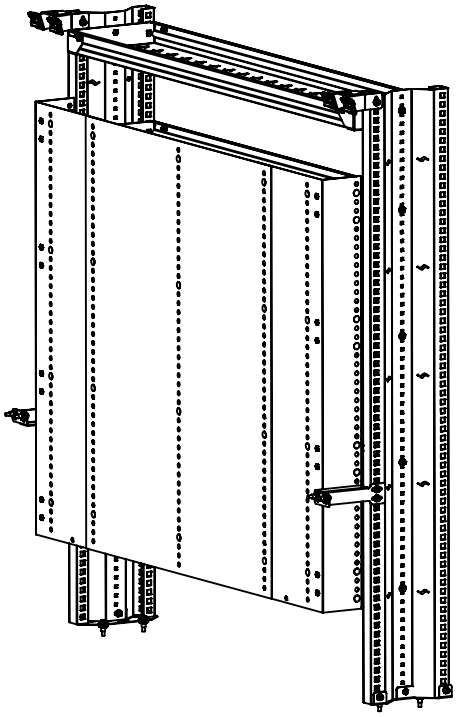

# STANDARD SHELVING BACK PANEL KITS

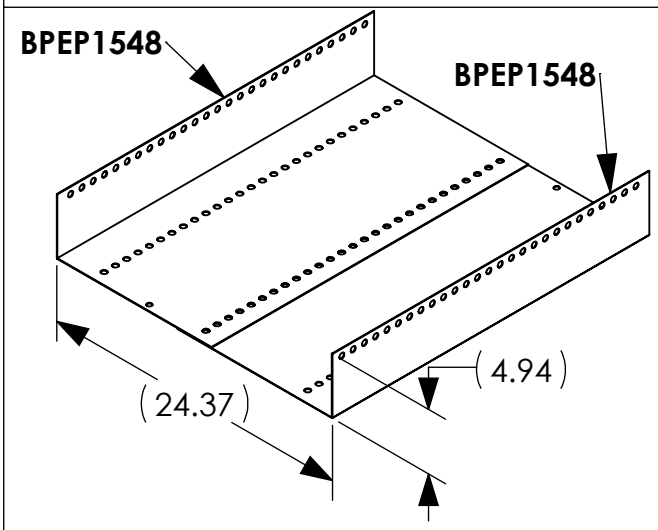


**BPKSL2448**

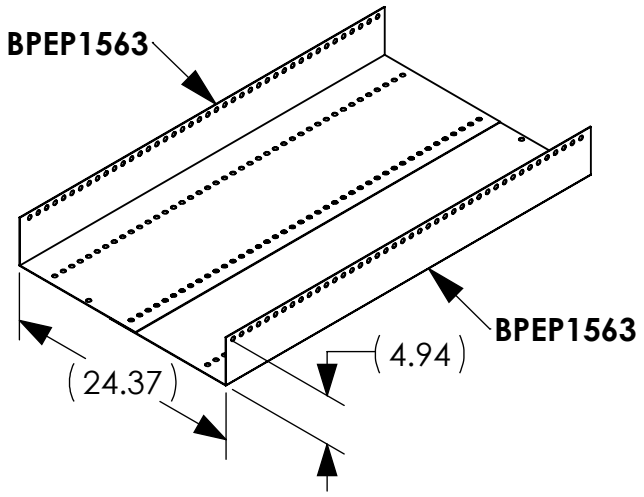


**BPKSL2463**

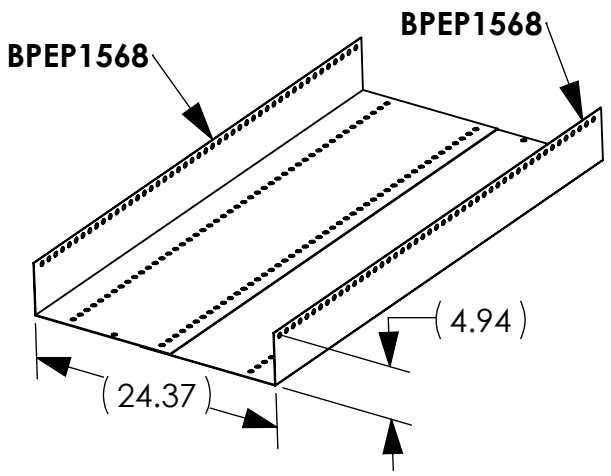


**BPKSL2468**

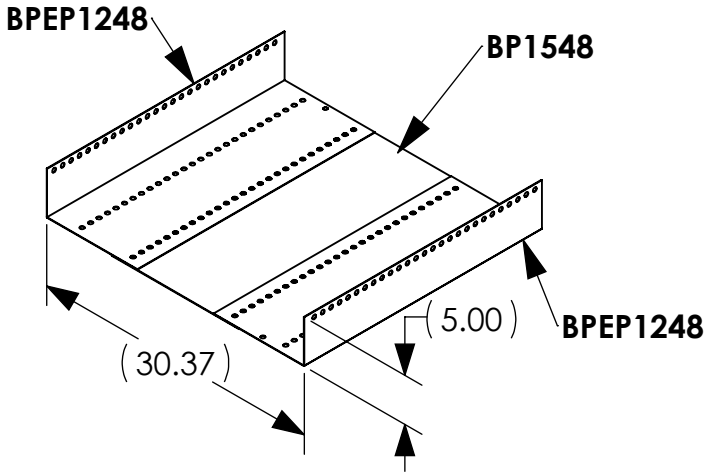


**BPKSL3048**

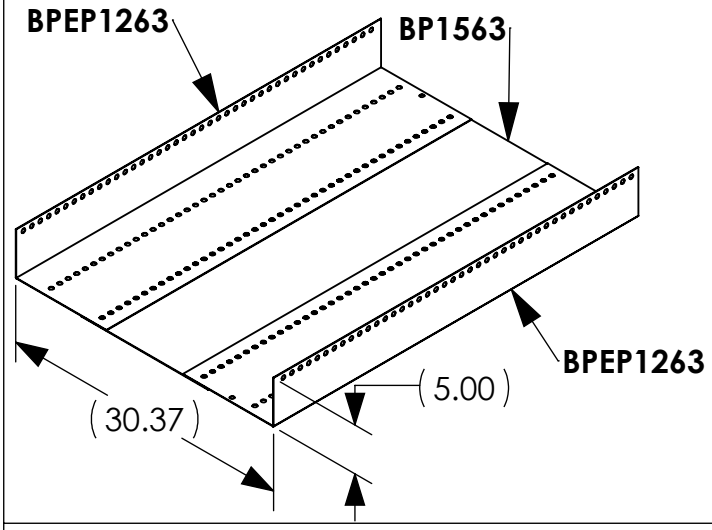


**BPKSL3063**

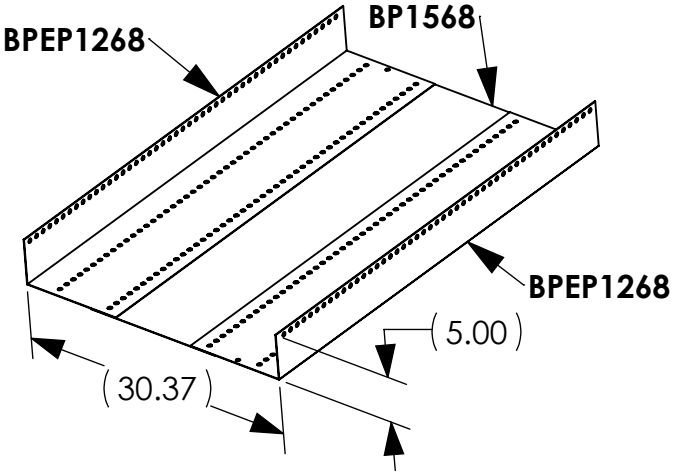


**BPKSL3068**

# STANDARD SHELVING BACK PANEL KITS

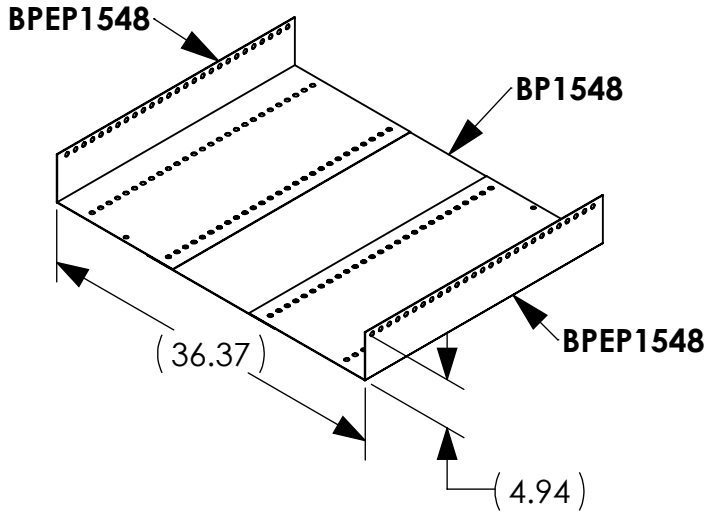


**BPKSL3648**

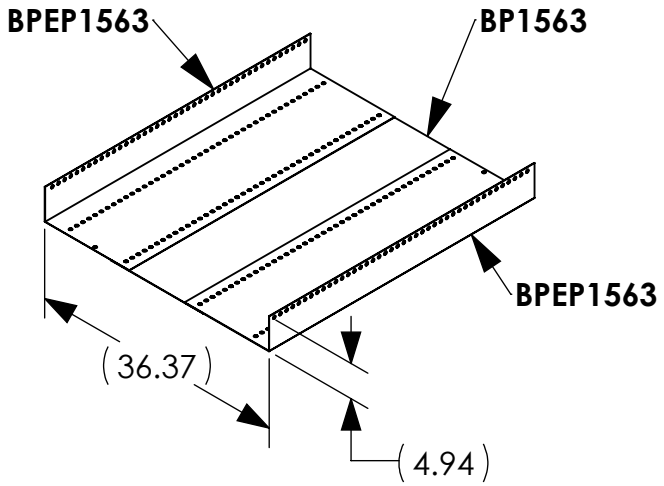


**BPKSL3663**

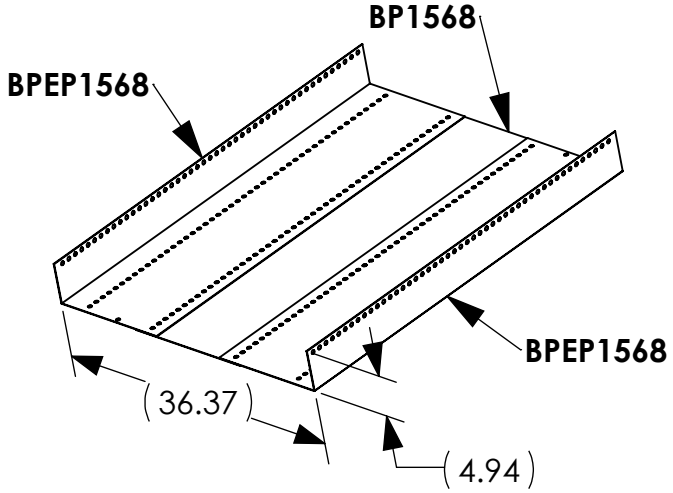


**BPKSL3668**

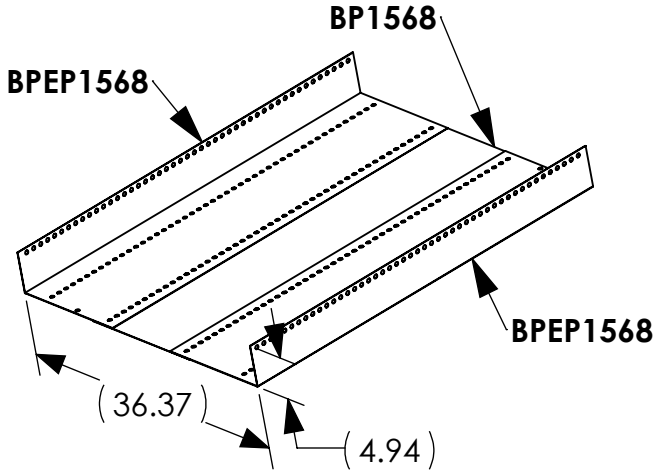


**BPKSL4248**

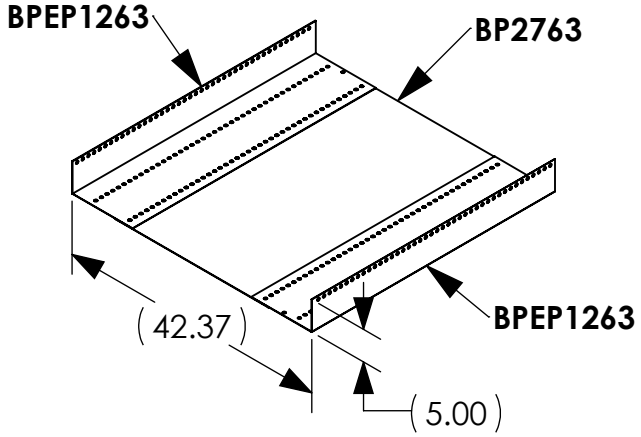


**BPKSL4263**

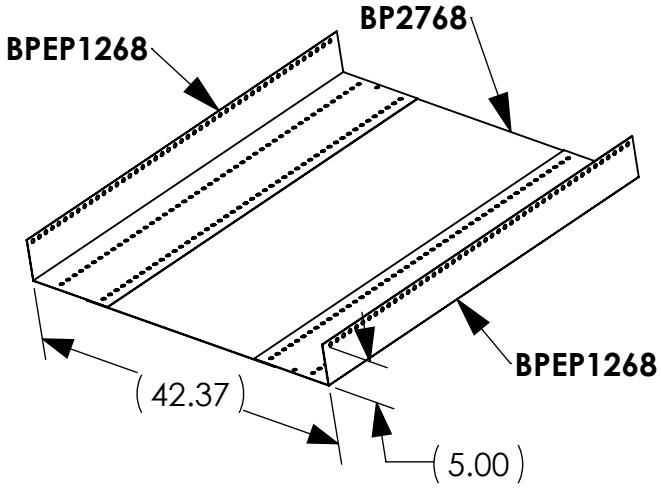


**BPKSL4268**

# STANDARD SHELVING BACK PANEL KITS

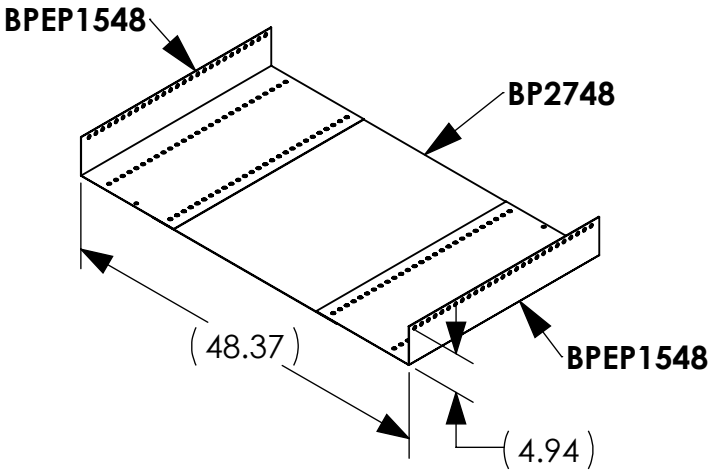


**BPKSL4848**

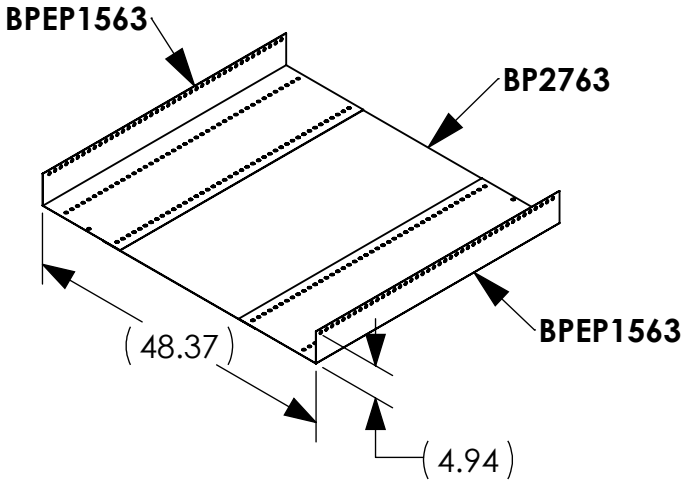


**BPKSL4863**

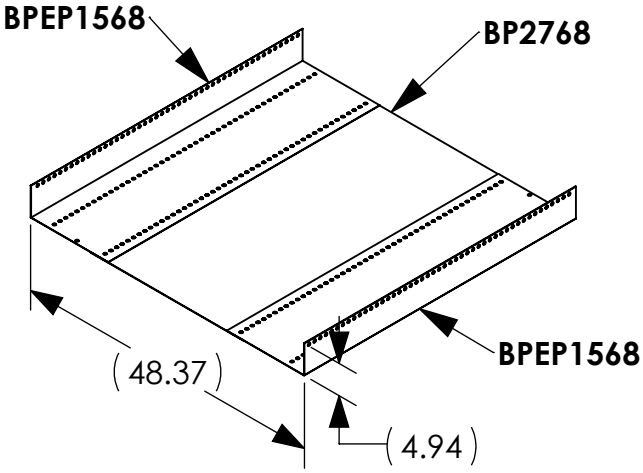


**BPKSL4868**

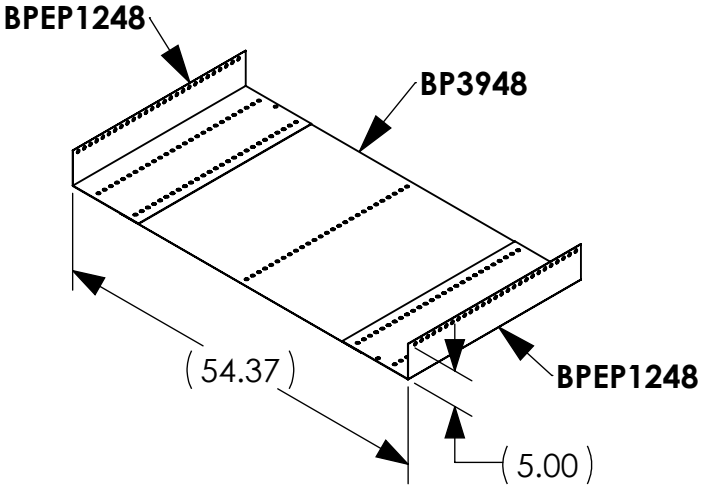


**BPKSL5448**

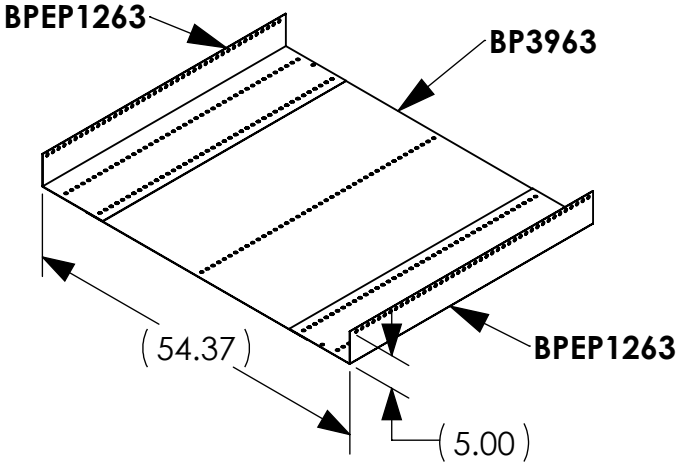


**BPKSL5463**

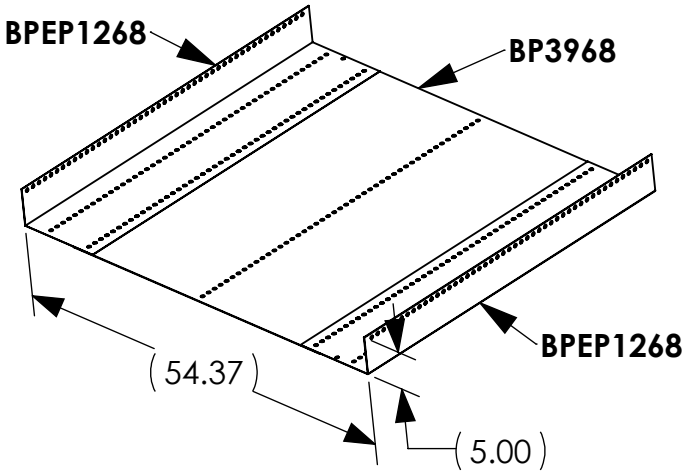


**BPKSL5468**

# STANDARD SHELVING BACK PANEL KITS

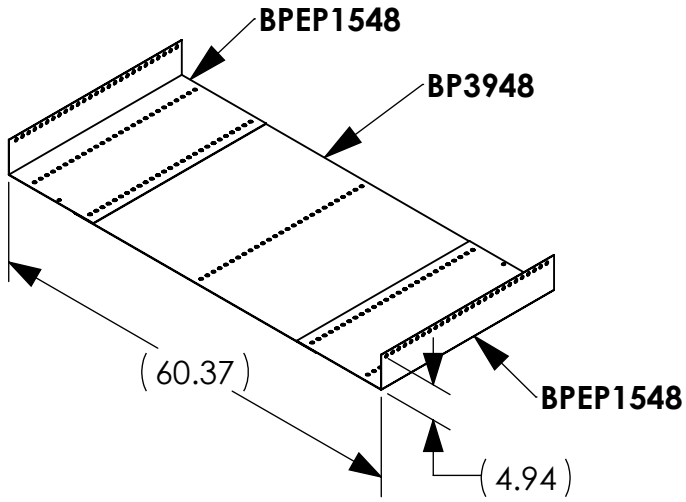


**BPKSL6048**

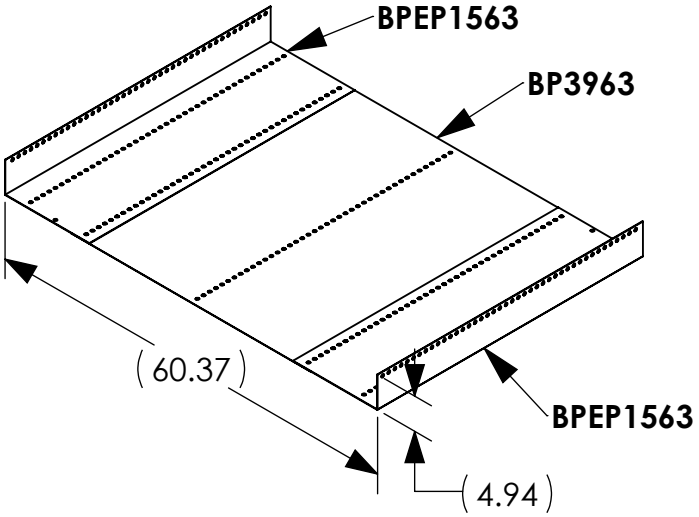


**BPKSL6063**

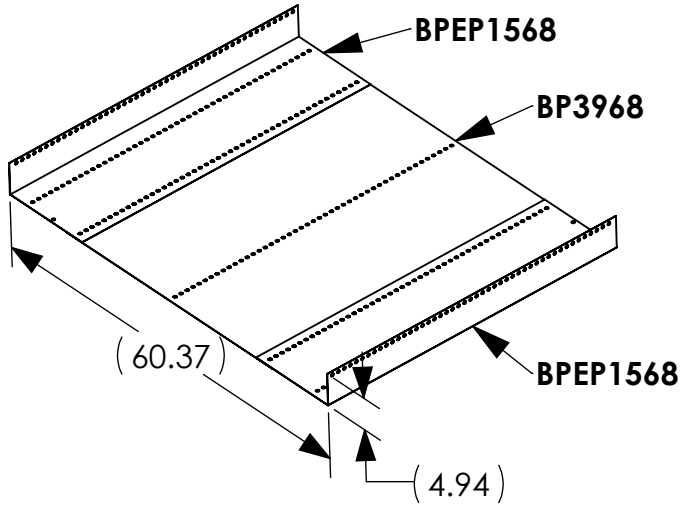


**BPKSL6068**

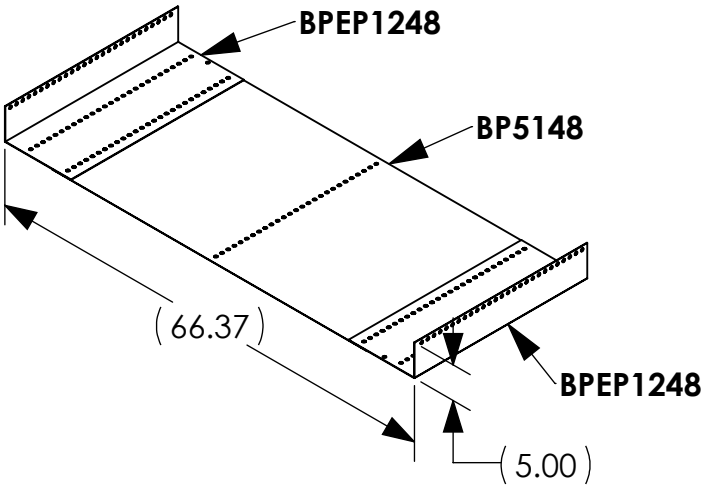


**BPKSL6648**

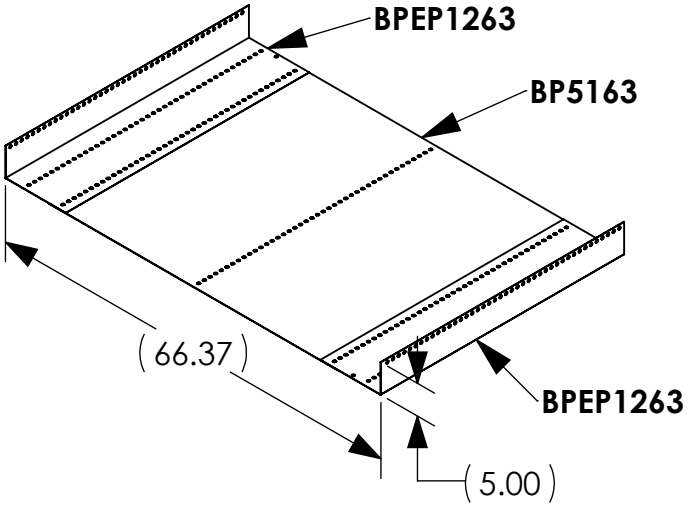


**BPKSL6663**

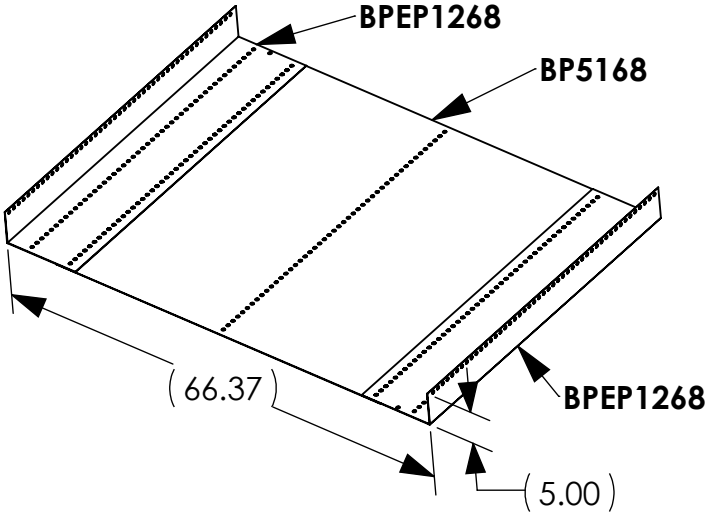


**BPKSL6668**

# STANDARD SHELVING BACK PANEL KITS

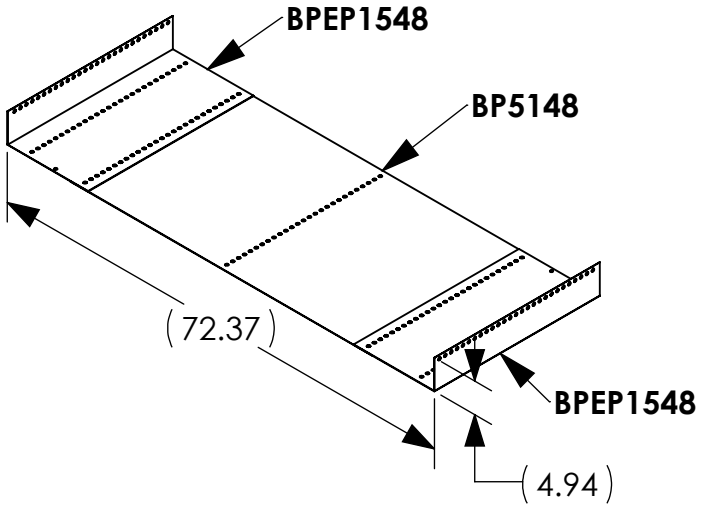


**BPKSL7248**

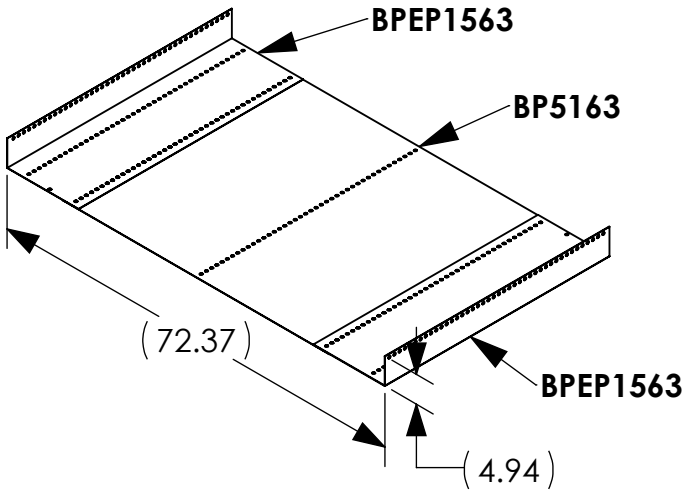


**BPKSL7263**

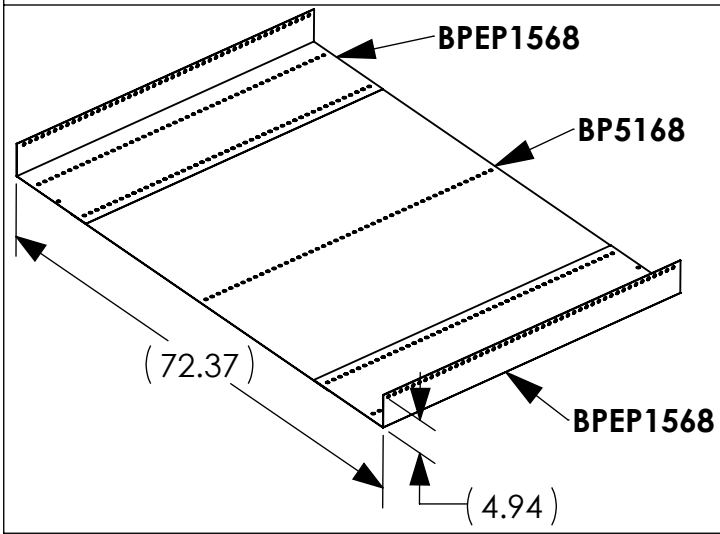


**BPKSL7268**

# FULL LENGTH SHELVING BACK PANEL KITS

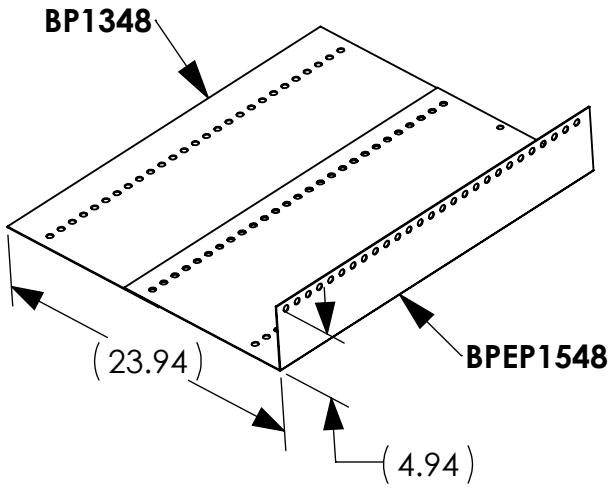


**BPKFL2448**

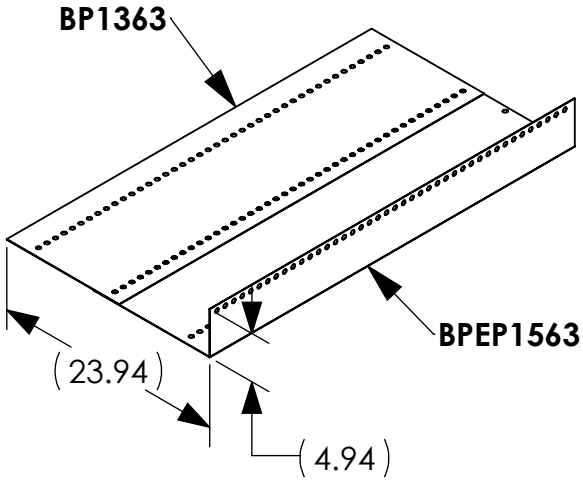


**BPKFL2463**

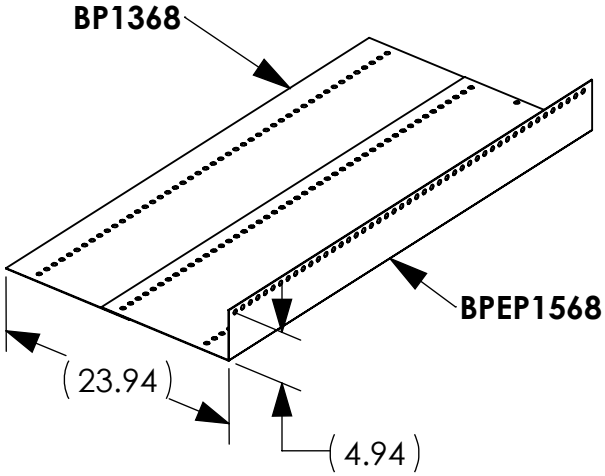


**BPKFL2468**

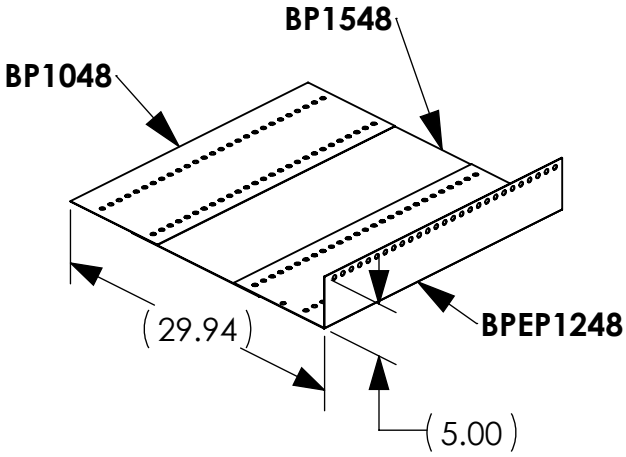


**BPKFL3048**

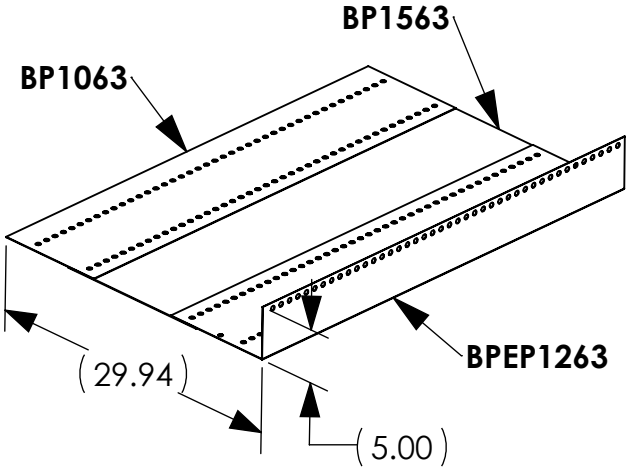


**BPKFL3063**

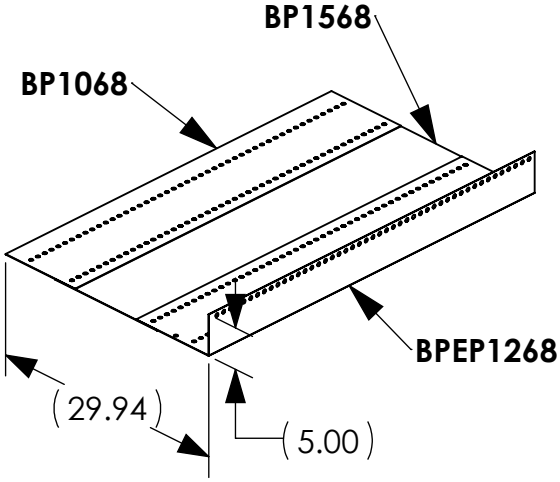


**BPKFL3068**

# FULL LENGTH SHELVING BACK PANEL KITS

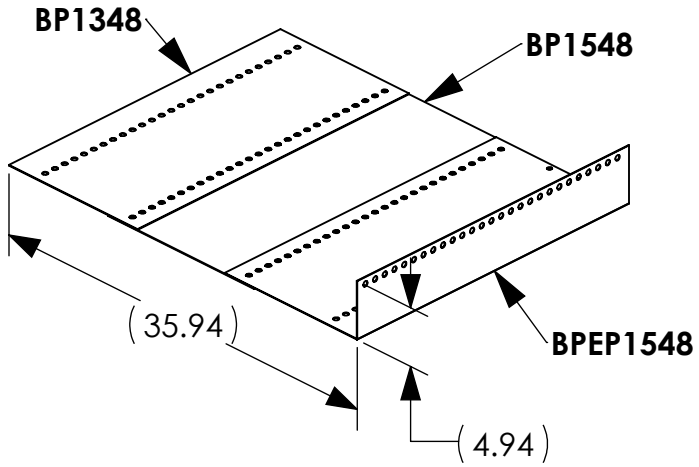


**BPKFL3648**

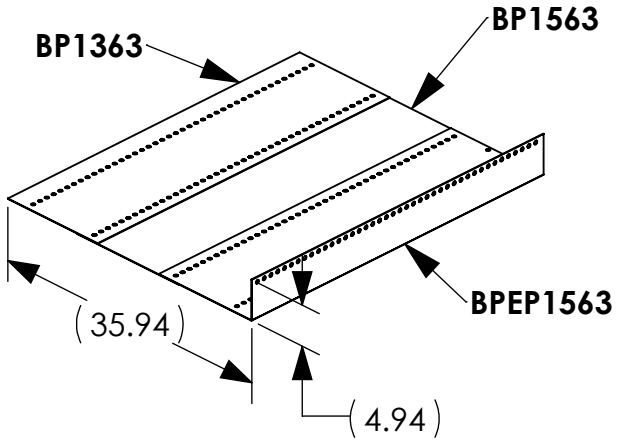


**BPKFL36 BP1348 63**

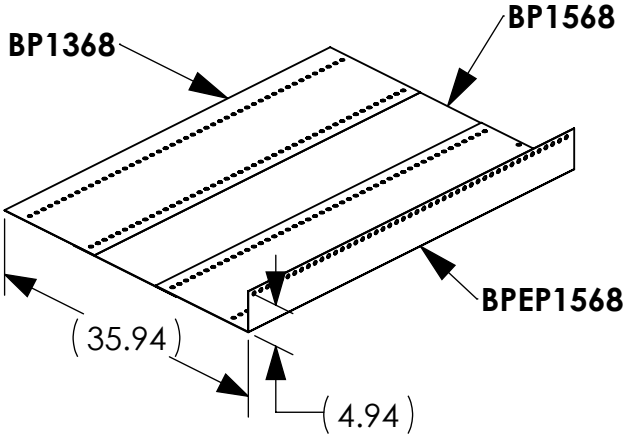


**BPKFL368**

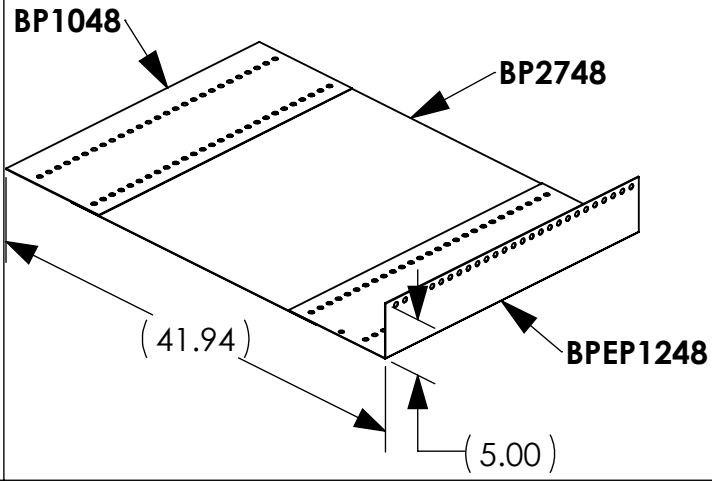


**BPKFL4248**

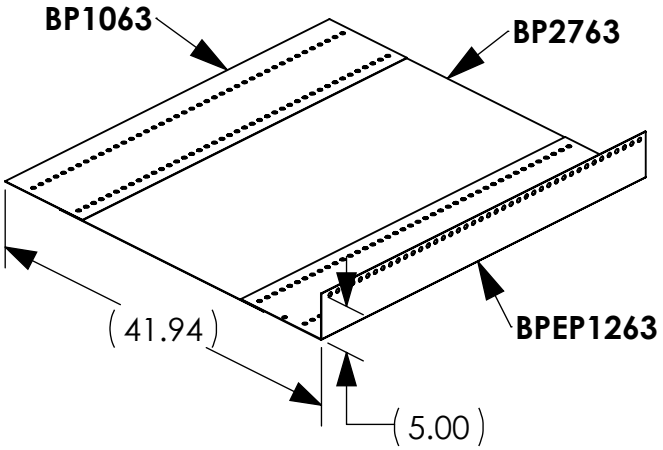


**BPKFL4263**

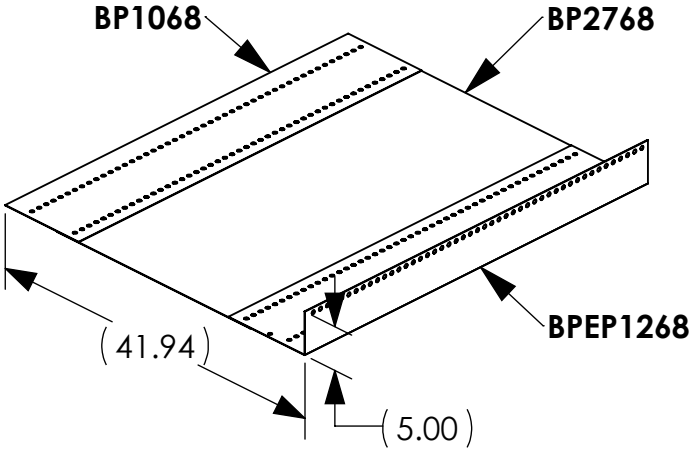


**BPKFL4268**

# FULL LENGTH SHELVING BACK PANEL KITS

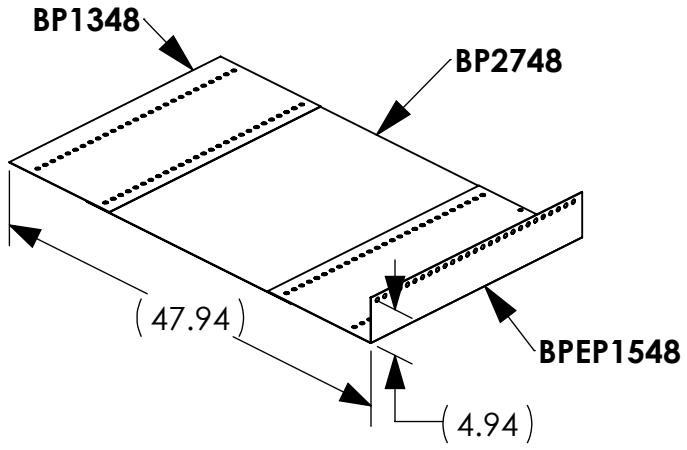


**BPKFL4848**

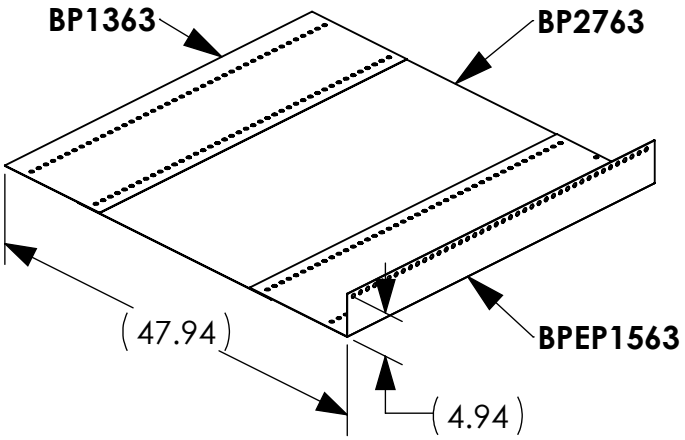


**BPKFL4863**

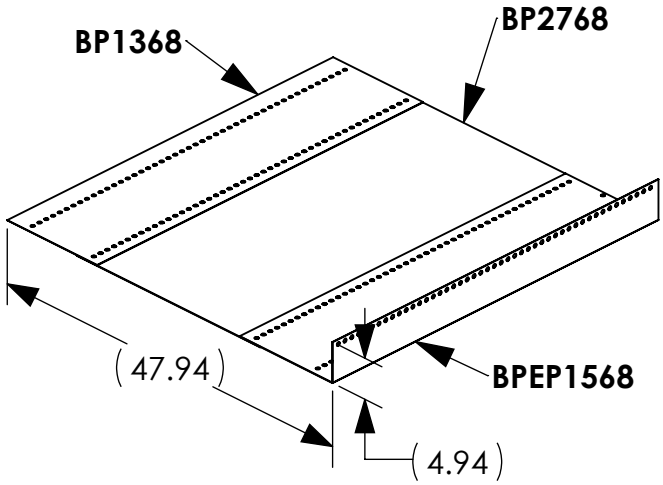


**BPKFL4868**

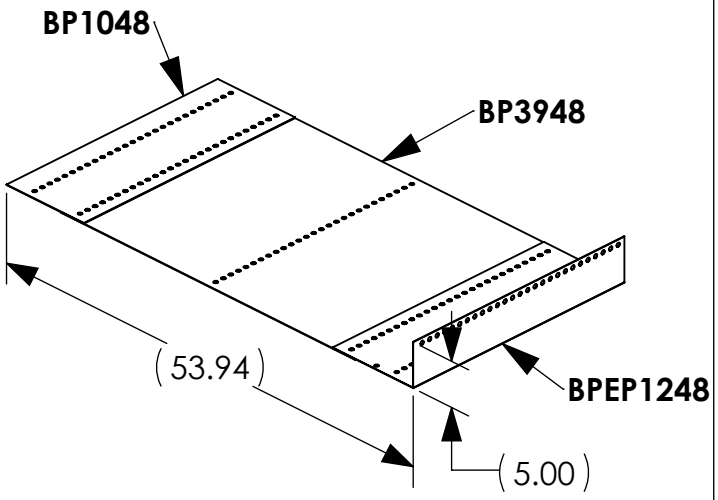


**BPKFL5448**

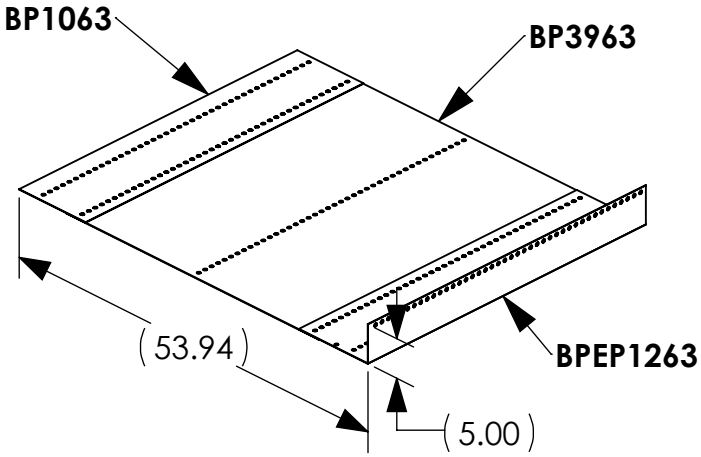


**BPKFL5463**

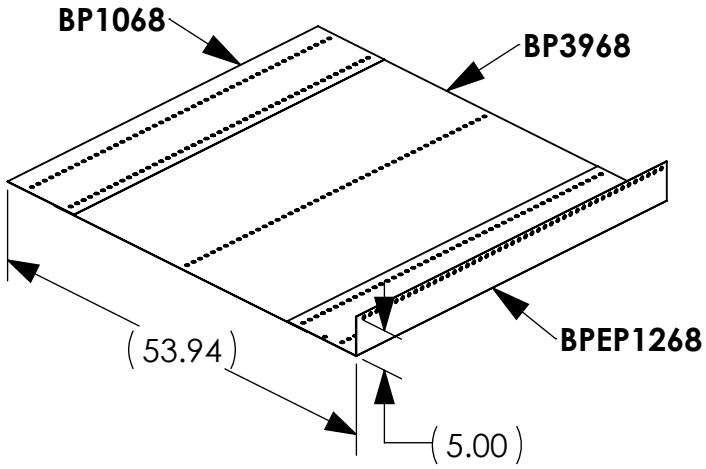


**BPKFL5468**

# FULL LENGTH SHELVING BACK PANEL KITS

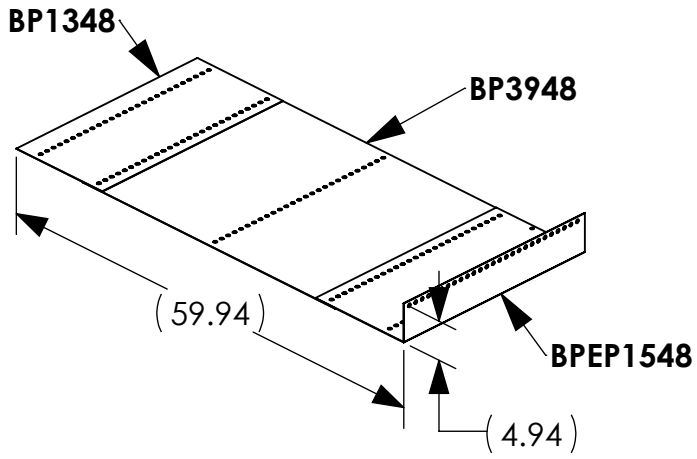


**BPKFL6048**

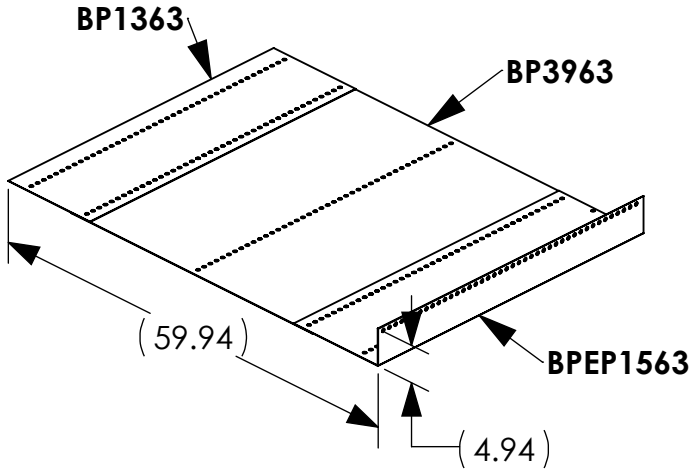


**BPKFL6063**

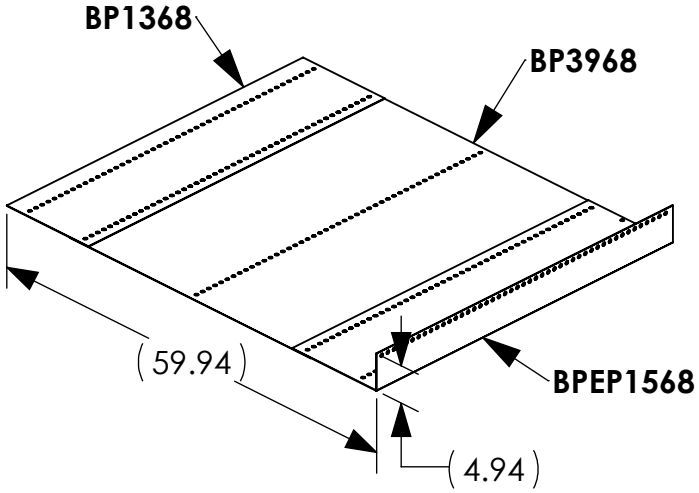


**BPKFL6068**

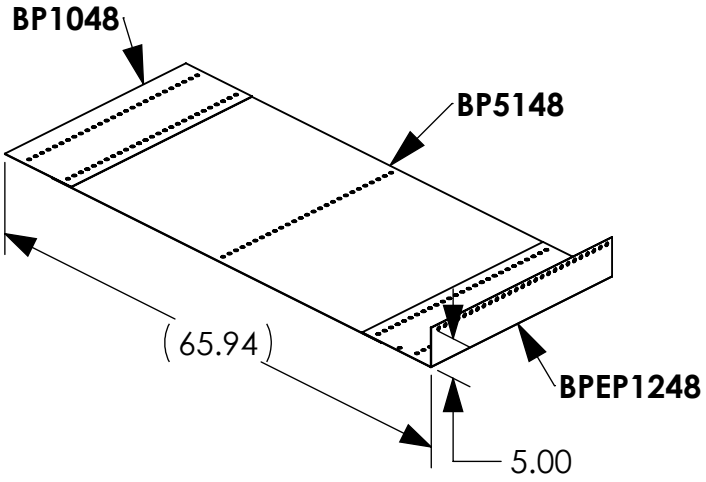


**BPKFL6648**

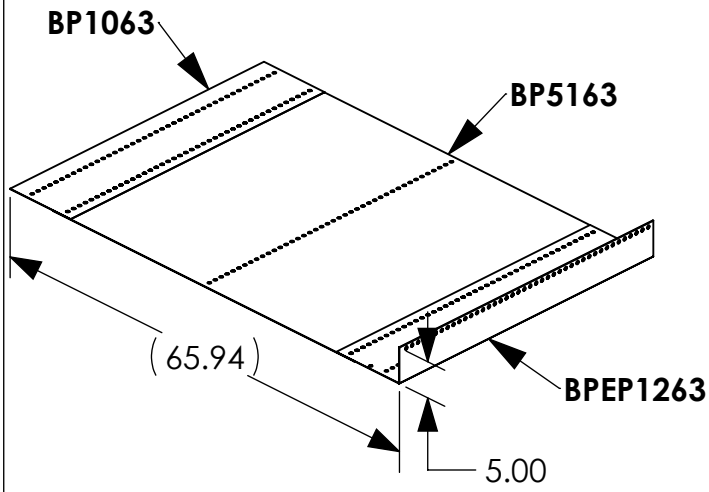


**BPKFL6663**

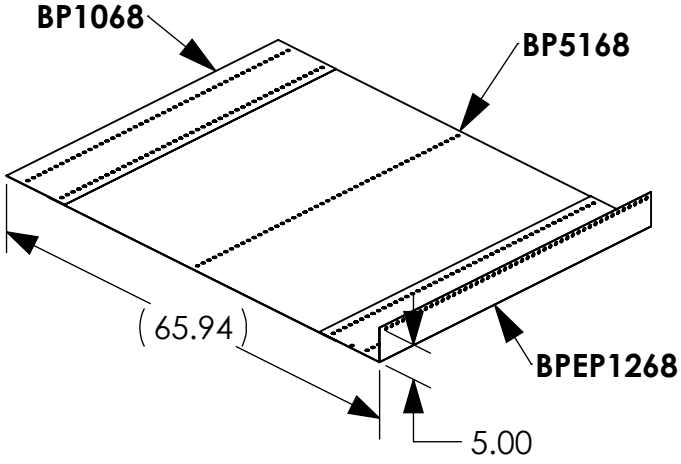


**BPKFL6668**

# FULL LENGTH SHELVING BACK PANEL KITS

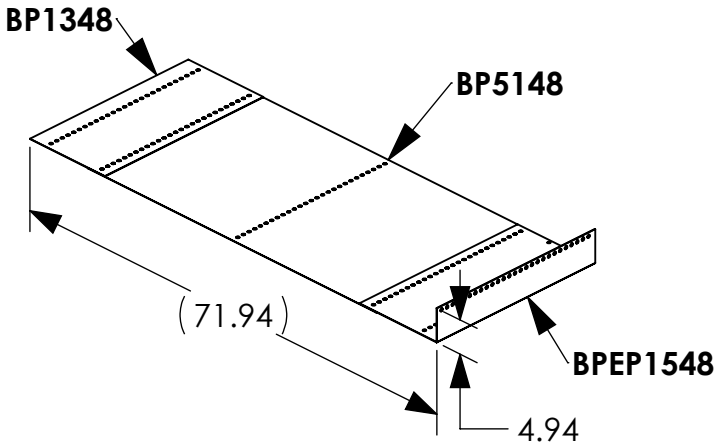


**BPKFL7248**

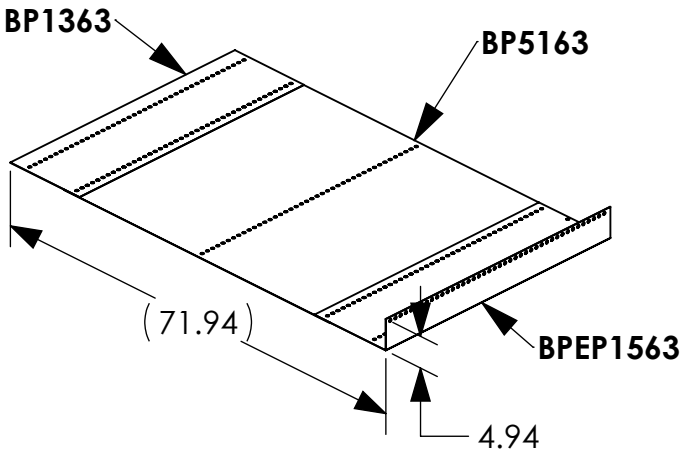


**BPKFL7263**

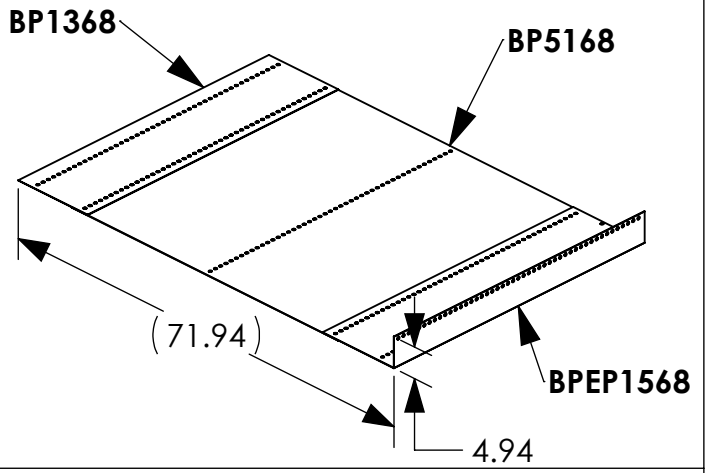


**BPKFL7268**

| INSTR. NUMBER : INS-BPK | PG: 1 | REV: B |
|---|---|---|
| PART NUMBER : INS-BPK | | |
| PART DESC. • BACK PANEL KIT • INSTRUCTIONS | | |

**THIS INSTRUCTION IS TO DEMONSTRATE THE INSTALLATION OF ADRIAN SHELVING BACK PANEL KITS TO NEXT GEN SHELVING**

**TO FIND KIT PART NUMBERS AND PRODUCT STRUCTURES OF YOUR SPECIFIC SHELVING UNIT, PLEASE REFER TO PART #: APP-BPK**

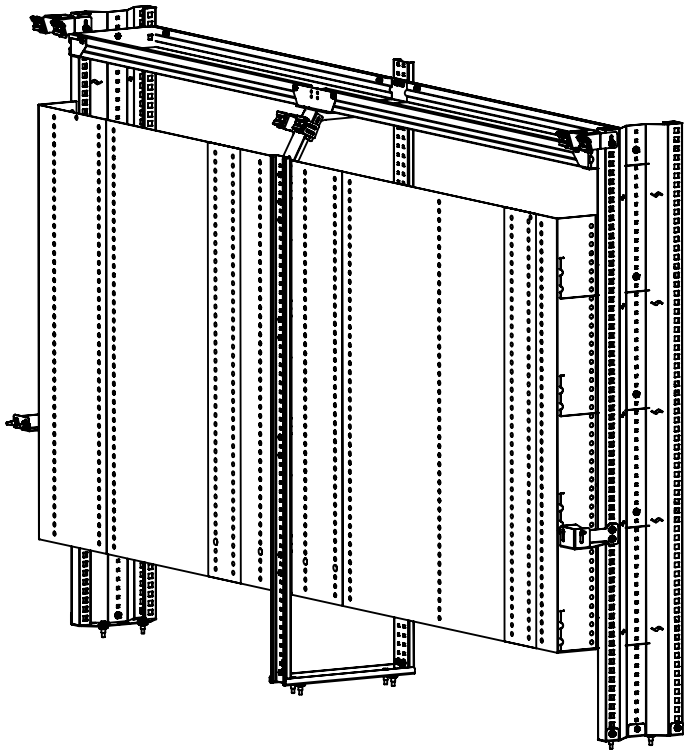

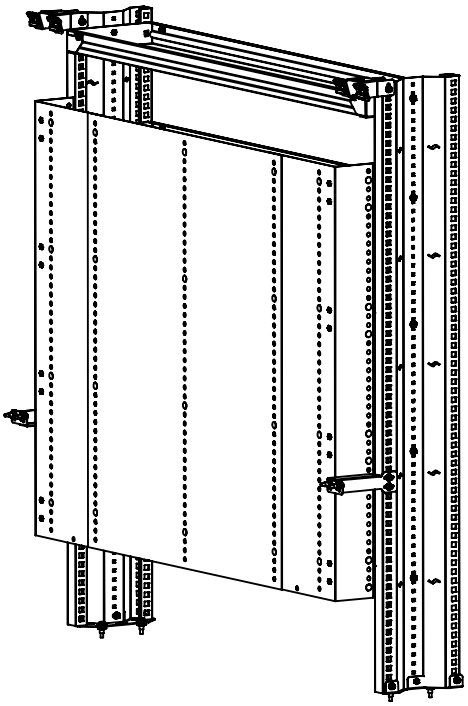

## *BEST PRACTICES*

**GET TO KNOW THE VEHICLE** - AT THE BEGINNING OF ANY INSTALLATION, CHECK THE LOCATION OF THE FUEL TANK, FUEL LINES, BRAKE LINES, HIGH VOLTAGE BATTERIES AND WIRING HARNESSES TO AVOID INJURY OR PROPERTY DAMAGE FROM TOOL CONTACT.

**SEAL ALL EXTERIOR HOLES** - ALL INSTALLATION HOLES SHOULD BE SEALED WITH BUTYL TAPE OR SILICON TO PREVENT WATER AND EXHAUST GASES FROM ENTERING THE VEHICLE.

**CONTROL DRILL DEPTH** - TO AVOID DAMAGE TO THE VEHICLE, USE A DRILL STOP OR CLEARED STEP BIT WHEN DRILLING INSTALLATION HOLES.

**ALWAYS ADD PRIMER** - WHEN ADDING INSTALLATION HOLES BE SURE TO USE A SELF-ETCHING PRIMER TO PREVENT CORROSION, FASTENER FAILURE AND INJURY.

**MOUNTING POINTS MUST HAVE METAL-TO-METAL CONTACT** - USE PROVIDED MOUNTING SPACERS TO ACCOMMODATE FOR VEHICLE FEATURES, CARPET OR SUBFLOORS.

**PROVIDE CLEARANCE FOR SPACERS** - IF THE INSTALLATION VEHICLE CONTAINS A CARPET OR SUBFLOOR, USE A 1-3/16" DIAMETER CARPET CUTTER (P/N: 31183-0) AT ALL MOUNTING LOCATIONS TO OPEN UP ROOM FOR SPACERS.

**CHECK SPACER ORIENTATION** - BE SURE THAT THE INDENT IN THE SPACER COVERS THE PLUSNUT HEAD; THIS ENSURES THE MOST METAL-TO-METAL CONTACT AND REDUCES VIBRATION.

**PLUSNUT INSTALLATION** - A PLUSNUT GUN IS RECOMMENDED FOR PLUSNUT INSTALLATION FOR ITS PRODUCTION SPEED. HOWEVER, A PLUSNUT SETTING TOOL CAN ALSO BE USED (P/N: 22200-0).

**THRU-BOLT CLEARANCE** - WHEN USING A THRU-BOLT AT ANY MOUNTING LOCATION, BE SURE THAT YOUR HOLE HAS 1/16" CLEARANCE.

**BEST PRACTICE: ORGANIZE ALL FASTENERS & VERIFY THAT ALL ARE ACCOUNTED FOR**

PAGE: 3

## *FASTENERS USED*

***BAG REFERENCE:*** **SEE BOM'S BELOW**

| BAG80424 | | | |
|---|---|---|---|
| ITEM NO. | PART NUMBER | DESCRIPTION | QTY. |
| 1 | FAS1018 | RIBBED NYLON INSERT, 1/4, 0.062"-0.372" GR | 42 |

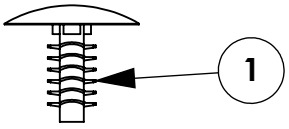


| BAG80425 | | | |
|---|---|---|---|
| ITEM NO. | PART NUMBER | DESCRIPTION | QTY. |
| 1 | FAS1018 | RIBBED NYLON INSERT, 1/4, 0.062"-0.372" GR | 35 |

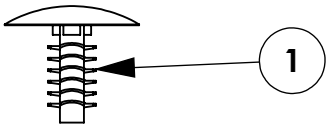


| BAG80426 | | | |
|---|---|---|---|
| ITEM NO. | PART NUMBER | DESCRIPTION | QTY. |
| 1 | FAS1018 | RIBBED NYLON INSERT, 1/4, 0.062"-0.372" GR | 28 |

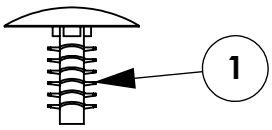

**INTENTIONALLY LEFT BLANK**

# STEP 1 - MOUNT BACK PANELS TO SHELVING UNIT

**Step 1.1**
**PLACE BACK PANELS UP AGAINST SHELVES,**

**MAKE SURE THAT HOLES SHOWN IS AT THE BOTTOM OF THE PANNELS.**

**Step 1.2**
**FOLD BOTH OUTER PANELS AND LINE UP TO HOLES IN SHELVING. PUSH FAS1018 INTO HOLES.**

**CENTER PANELS TO BE INSTALL IN Step 1.3**

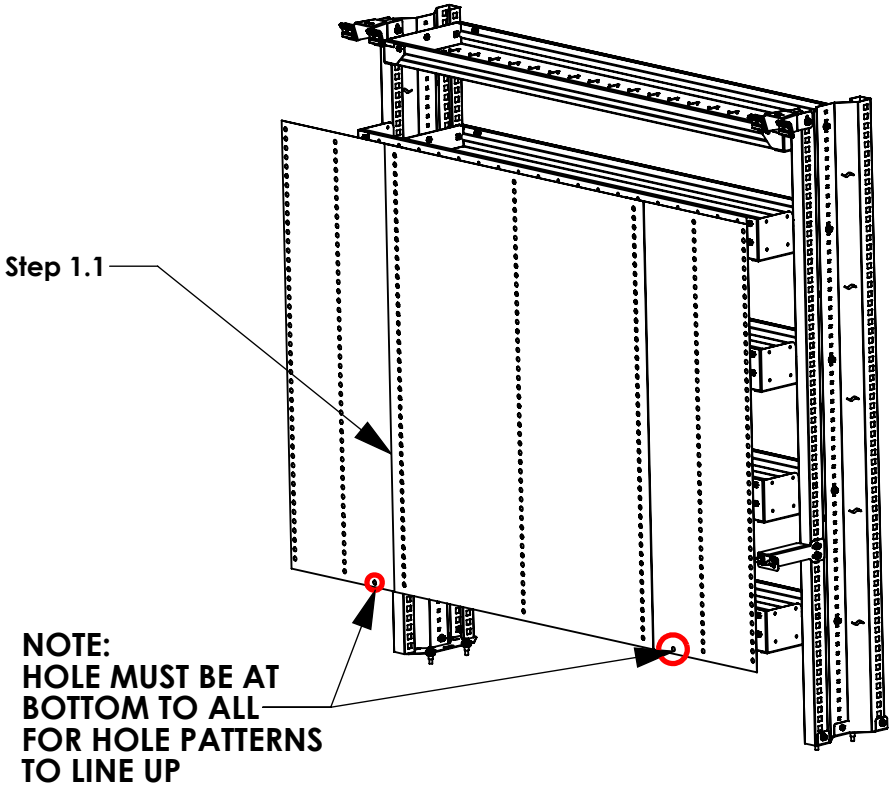


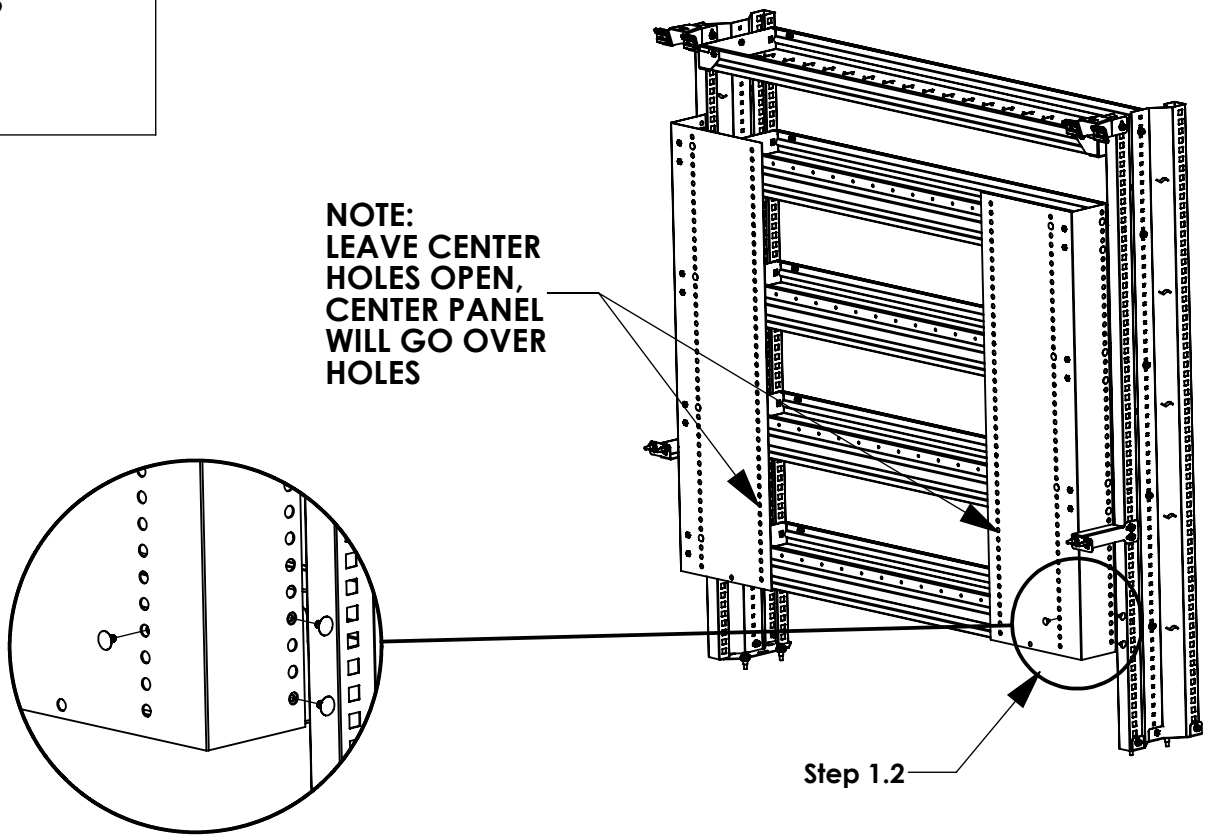

# STEP 1 - MOUNT BACK PANELS TO SHELVING UNIT

**Step 1.3A**
**FOR STANDARD BACK PANELS PLACE CENTER PANEL OVER OUTER PANELS AND LINE UP TO HOLES IN SHELVING AND OUTER PANELS. PUSH FAS1018 INTO HOLES**

**Step 1.3B**
**FOR SHELVING WITH A CENTER SHELF, PLACE EXTRA PANEL ON BOTH SIDE OF CENTER SUPPORT AND PUCH FAS1018 INTO HOLES**

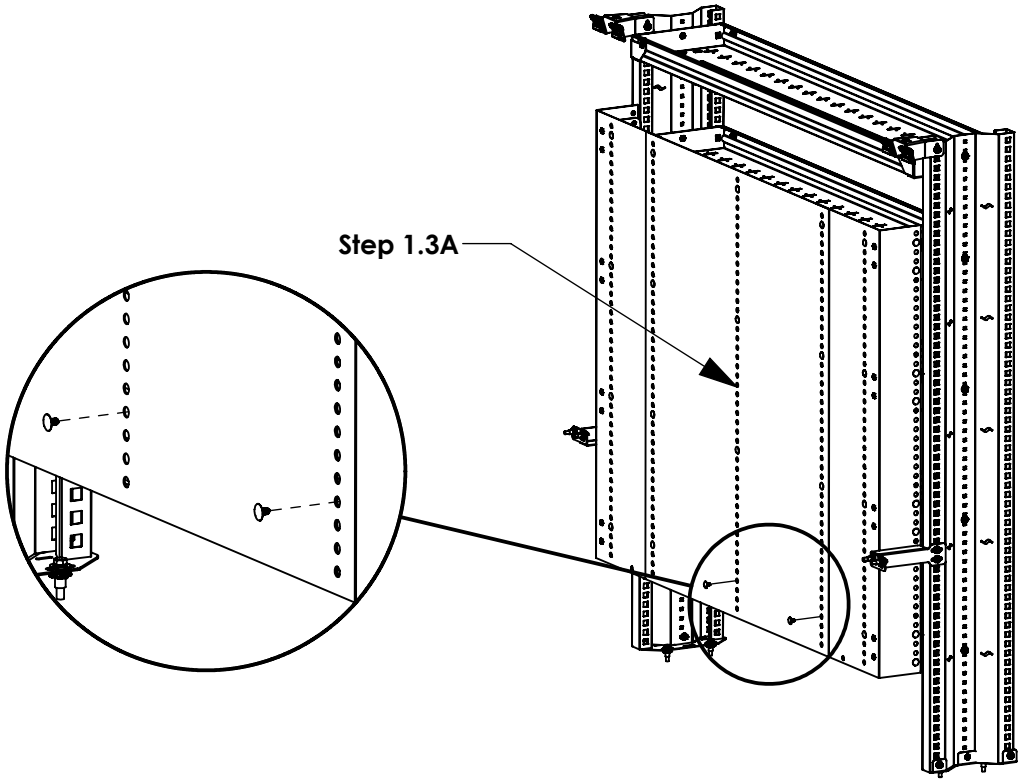


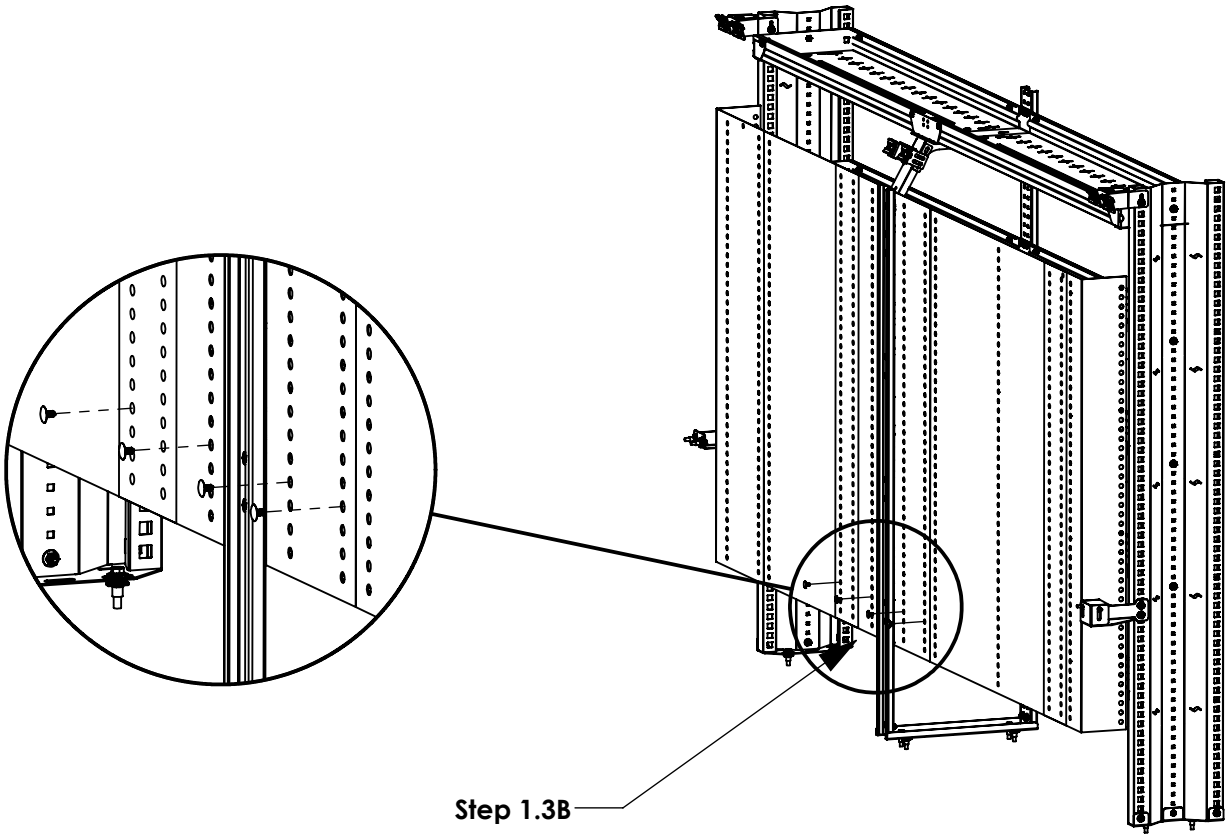

# STEP 2 - CLOSING OUT BACK PANELS

**Step 2.1**
**FOR ALL BACK PANELS, LOCATE THE TOP TWO HOLES, AND TWO MORE SLIGHTLY FURTHER DOWN AS NEEDED (SEE IMAGE AT BOTTOM OF PAGE). INSERT 31443-0 INTO THE TWO DESIRED LOCATIONS AND PULL TIGHT.**

**3-4 LOCATIONS FOR FULL LENGTH UNITS**

**2 LOCATIONS FOR STANDARD LENGTH UNITS**

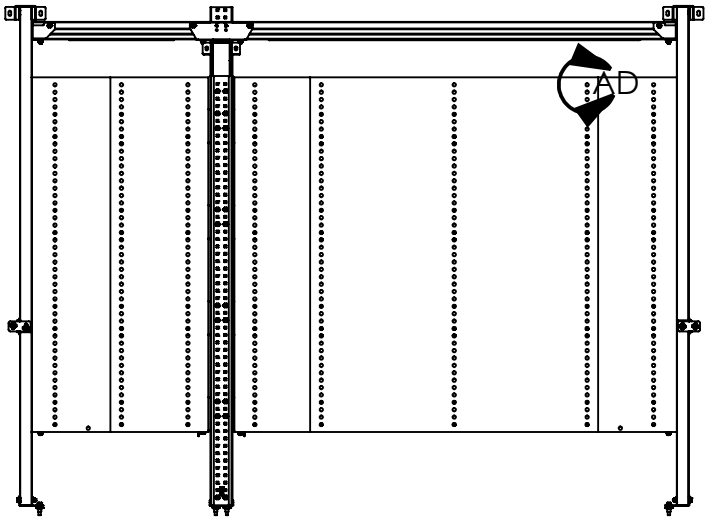


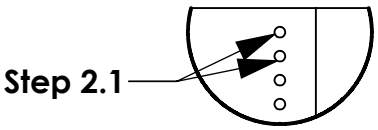


DETAIL AD
SCALE 1 : 8

**Step 2.2 ONCE ALL 31443-0 ARE IN PLACE AND FULLY TIGHTENED, CUT REMAINING MATERIAL OFF OF EACH ZIP TIE.**

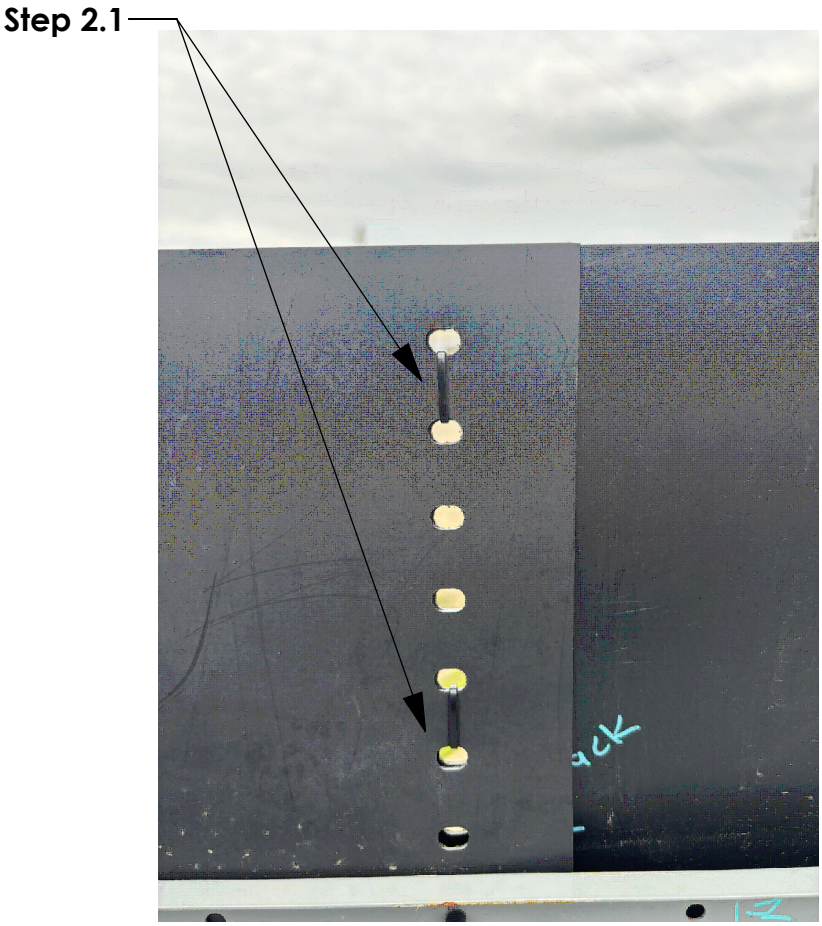


**INSTALLATION IS COMPLETE**