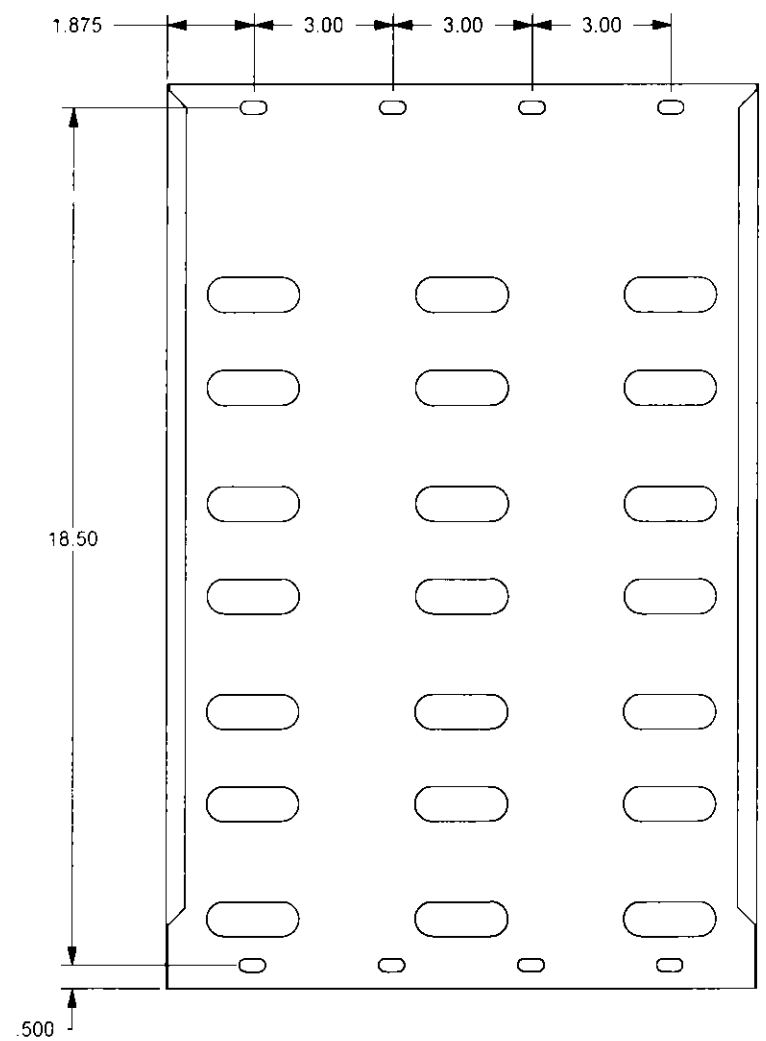

Mounting Detail
do not scale this view

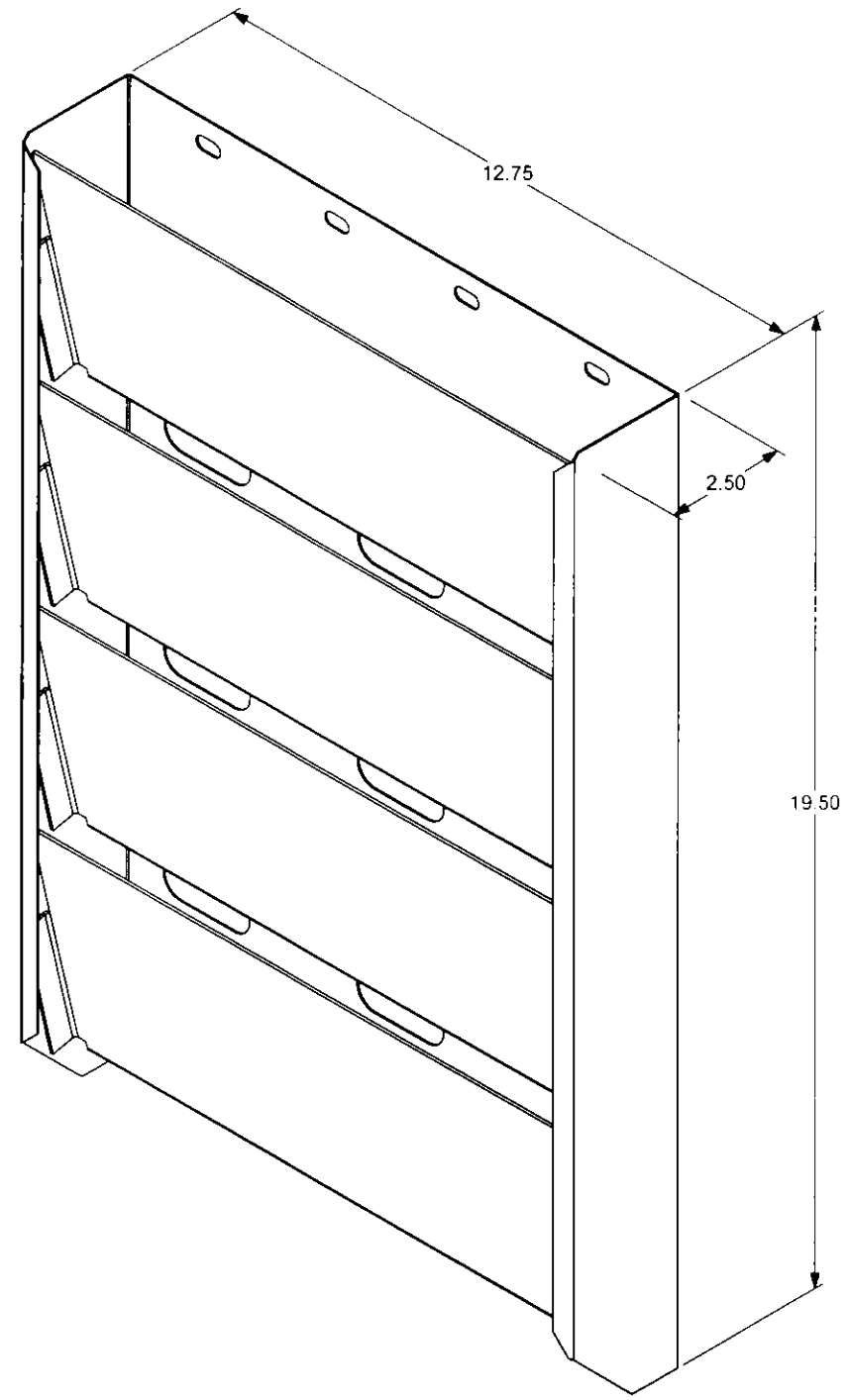

BH4 Is designed to mount on partition or almost any vertical surface. Excellent for binders. Each pocket is 2-1/2" deep.

INSTALLATION FASTENERS

FAS0041	SCREW, THP #14 x 3/4"	(4)
FAS0066	WASHER, LOCK EXT. 1/4"	(4)
FAS0061	SCREW, THP 1/4-20x 50 P/G	(6)
FAS0055	NUT,HEX FLANGE 1/4-20	(6)

Sheet 1 of 1

THIS DRAWING IS THE PROPERTY OF ADRIAN STEEL CO.

THIS DRAWING IS NOT TO BE USED IN ANY MANNER DETRIMENTAL TO THE INTERESTS OF ADRIAN STEEL CO

Released ECN-7017 JLC	Chk'd 11/26/03	Revised ECN-0000 Decription:	Chk'd 00/00/00	Dsg By: **Jeff**	Checked By	Blank Mat'l:	Post Process Mat'l	Paint: **GrayPwdct**
Revised ECN-7068 TAR Decription UPDATED PRODUCT STRUCTURE	Chk'd 12/15/03			Date:	Prod Dev Date	Area (Sq. Ft.):	Area (Sq. Ft.)	Area (Sq. Ft.): **10.8532**
				Scale: **1:4**	Apps Date:	Wt. (Lbs.): **10.1200**	Wt. (Lbs.):	Wt. (Lbs.): **0.2647**
				Part Description	**4 Pocket Binder Holder**	**(Partition Panel over DDF's)**		

STANDARD TOLERANCES UNLESS OTHERWISE NOTED:
0.0 = ± .125
0.00 = ± .062
0.000 = ± .031
Material Thickness = per AISI **0° = ± 2°**
Notches, Slots, Holes = ± .015 **0.0° = ± 1°**

ADRIAN STEEL
906 James St. Adrian, MI 49221
517.265.6194

BH4 | **A**