INSTR. NUMBER	PG:	REV:
:INSAWB	1	A

PART NUMBER •
•

PART DESC. • GENERAL WORKBENCH
• MODULE ASSEMBLY

NOTE: THIS INSTRUCTION IS VALID FOR THE FOLLOWING KITS:
- AWB1-18X42
- AWB1-18X84
- AWB1-18X84PM
- AWB2-18X72

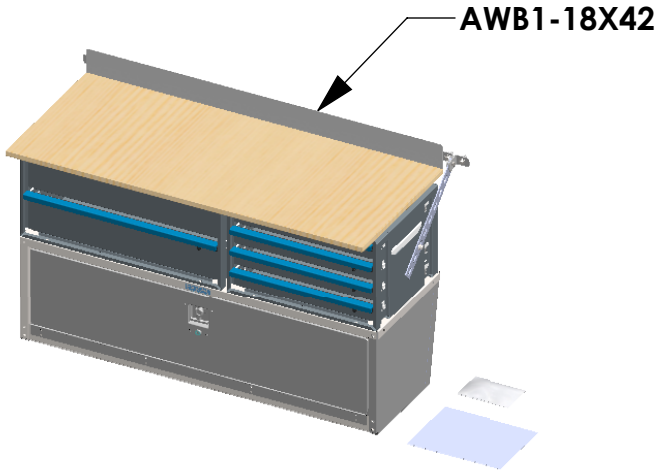

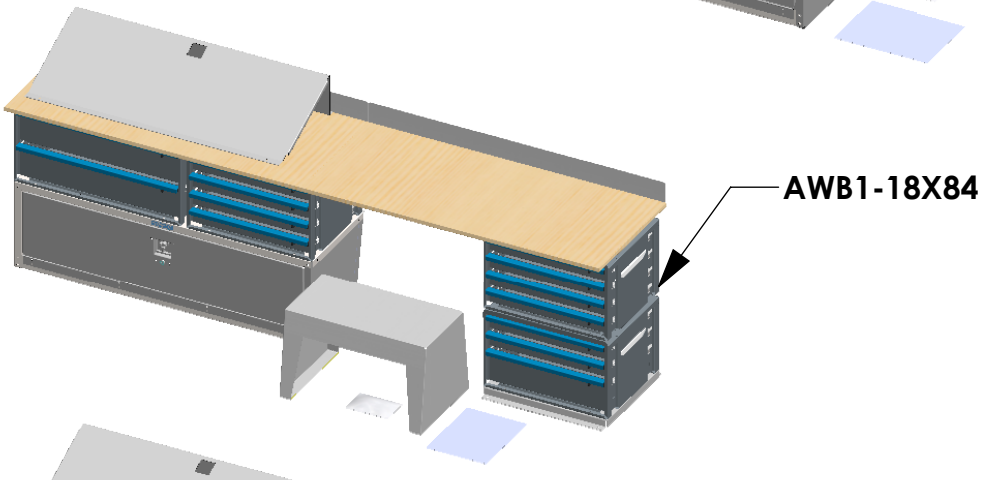

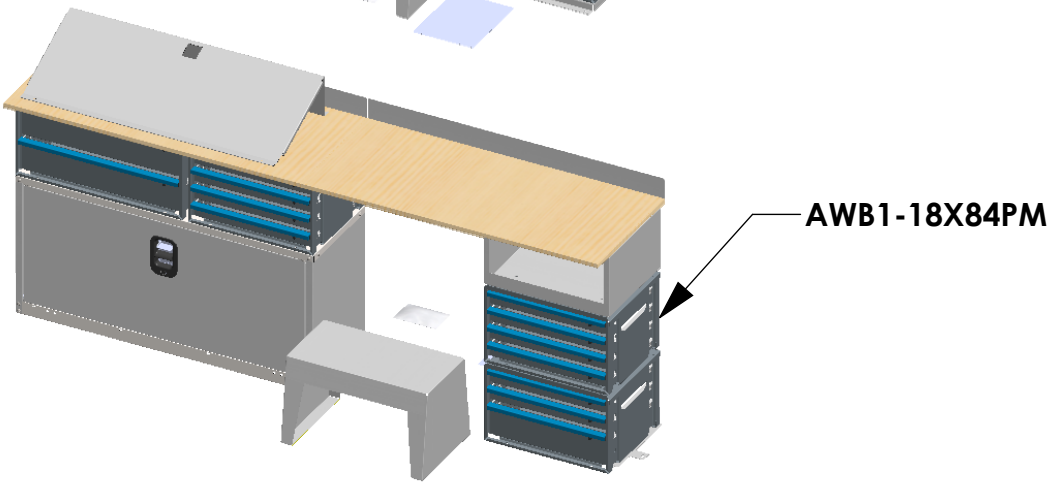

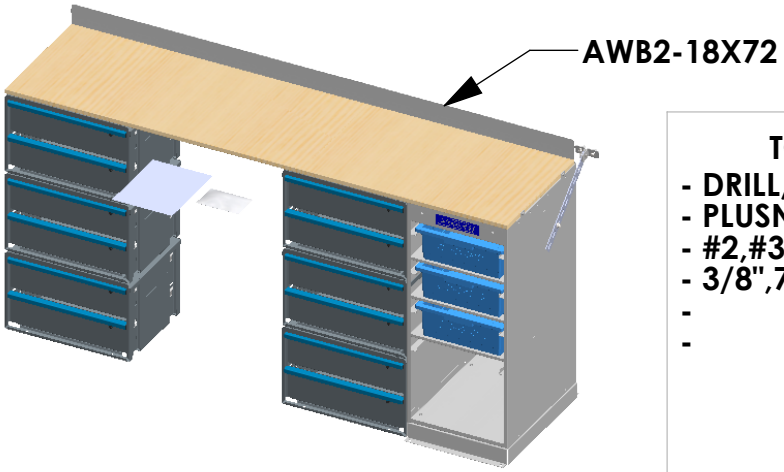

TOOLS NEEDED:
- DRILL, DRILLSTOP
- PLUSNUT GUN
- #2,#3 PHILLIPS
- 3/8",7/16",1/2" SOCKETS
-
-

BEST PRACTICES

GET TO KNOW THE VEHICLE - AT THE BEGINNING OF ANY INSTALLATION, CHECK THE LOCATION OF THE FUEL TANK, FUEL LINES, BRAKE LINES, HIGH VOLTAGE BATTERIES AND WIRING HARNESSES TO AVOID INJURY OR PROPERTY DAMAGE FROM TOOL CONTACT.

SEAL ALL EXTERIOR HOLES - ALL INSTALLATION HOLES SHOULD BE SEALED WITH BUTYL TAPE OR SILICON TO PREVENT WATER AND EXHAUST GASES FROM ENTERING THE VEHICLE.

CONTROL DRILL DEPTH - TO AVOID DAMAGE TO THE VEHICLE, USE A DRILL STOP OR CLEARED STEP BIT WHEN DRILLING INSTALLATION HOLES.

ALWAYS ADD PRIMER - WHEN ADDING INSTALLATION HOLES BE SURE TO USE A SELF-ETCHING PRIMER TO PREVENT CORROSION, FASTENER FAILURE AND INJURY.

MOUNTING POINTS MUST HAVE METAL-TO-METAL CONTACT - USE PROVIDED MOUNTING SPACERS TO ACCOMMODATE FOR VEHICLE FEATURES, CARPET OR SUBFLOORS.

PROVIDE CLEARANCE FOR SPACERS - IF THE INSTALLATION VEHICLE CONTAINS A CARPET OR SUBFLOOR, USE A 1-3/16" DIAMETER CARPET CUTTER (P/N: 31183-0) AT ALL MOUNTING LOCATIONS TO OPEN UP ROOM FOR SPACERS.

CHECK SPACER ORIENTATION - BE SURE THAT THE INDENT IN THE SPACER COVERS THE PLUSNUT HEAD; THIS ENSURES THE MOST METAL-TO-METAL CONTACT AND REDUCES VIBRATION.

PLUSNUT INSTALLATION - A PLUSNUT GUN IS RECOMMENDED FOR PLUSNUT INSTALLATION FOR ITS PRODUCTION SPEED. HOWEVER, A PLUSNUT SETTING TOOL CAN ALSO BE USED (P/N: 22200-0).

THRU-BOLT CLEARANCE - WHEN USING A THRU-BOLT AT ANY MOUNTING LOCATION, BE SURE THAT YOUR HOLE HAS 1/16" CLEARANCE.

INTENTIONALLY LEFT BLANK

STEP 1 - MOUNT WHEELHOUSE BIN (IF MODULE IS EQUIPPED)

STEP 2 - MOUNT DRAWER UNITS TO WHEELHOUSE BIN

Step 1.1
ASSEMBLE AND MOUNT WHEELHOUSE BIN PER UNIT INSTRUCTION

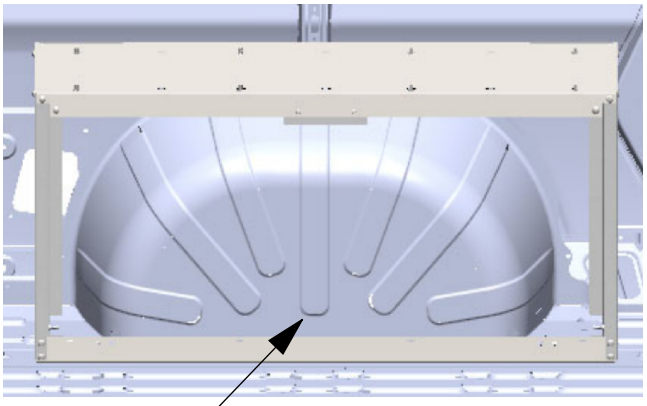

PROMASTER SHOWN

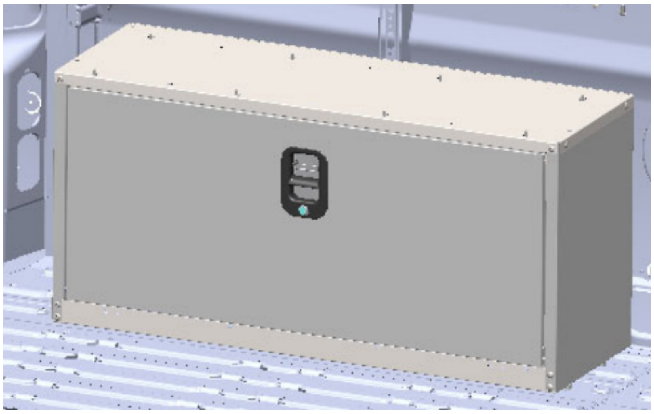

Step 2.1
MOUNT DRAWER UNITS TO THE WHEELHOUSE BIN USING FASTENERS PROVIDED PER DRAWER UNIT INSTRUCTIONS

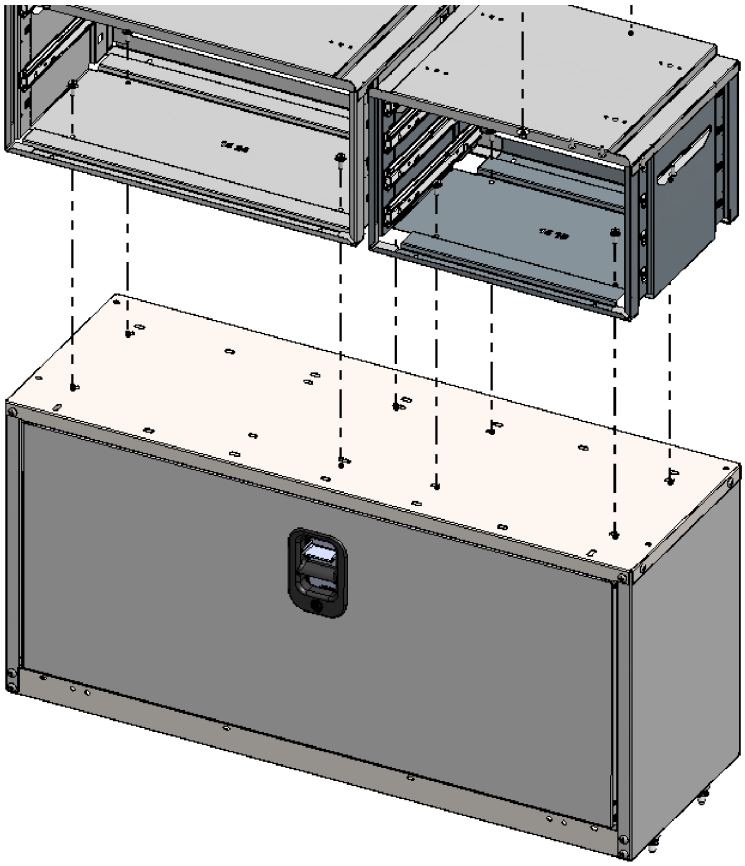

STEP 3 - MOUNT DRAWER UNIT STACK

ALWAYS VERIFY THE LOCATION OF THE FUEL TANK, FUEL LINES, BRAKE LINES, HIGH VOLTAGE BATTERIES AND WIRING HARNESSES TO AVOID INJURY OR PROPERTY DAMAGE FROM TOOL CONTACT.

Step 3.1
MOUNT BOTTOM DRAWER UNIT TO VEHICLE.
PER UNIT INSTRUCTIONS

BE SURE TO MEASURE OVER SO THAT THE WORKBENCH TOPS ALIGN WITH THE OUTER EDGES OF THE DRAWER UNITS / SHELF

CHECK OEM NO-DRILL AREAS

(AWB1-18X84PM IS SUPPLIED WITH 46703-G MTG. PLATE TO AVOID OEM NO-DRILL AREA)

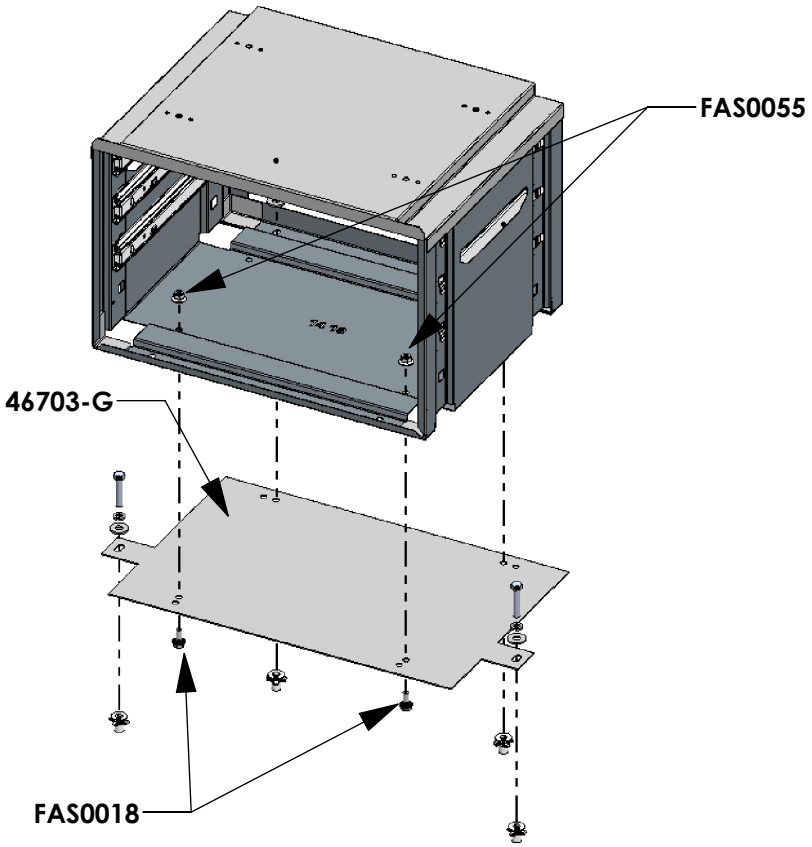

Step 3.2
STACK DRAWER UNITS PER UNIT INSTRUCTION

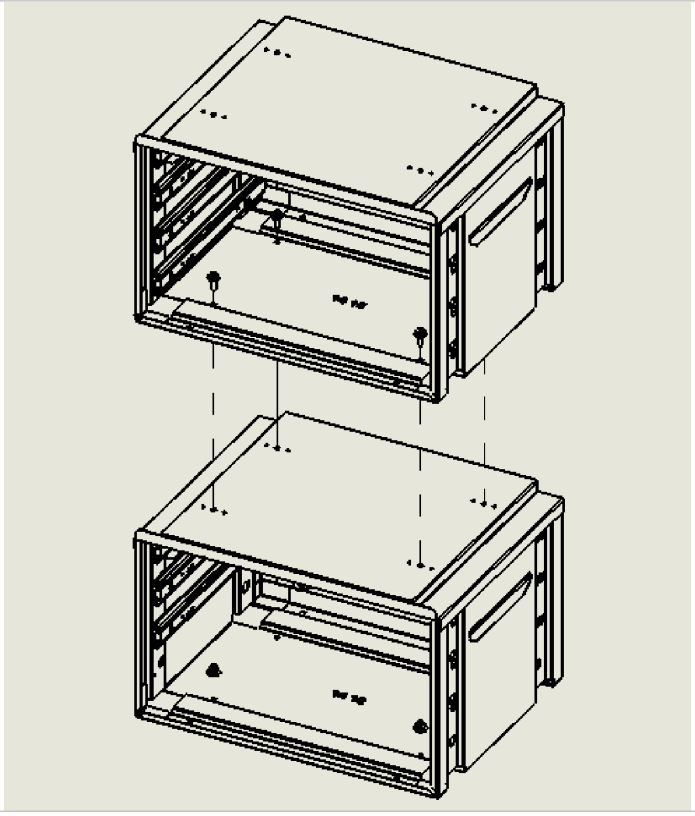

STEP 4 - MOUNT RISER SHELF - IF APPLICABLE

Step 4.1
USING THE MTG. HOLES ATOP THE DRAWER UNIT, ATTACH THE RISER SHELF. FULLY TIGHTEN.

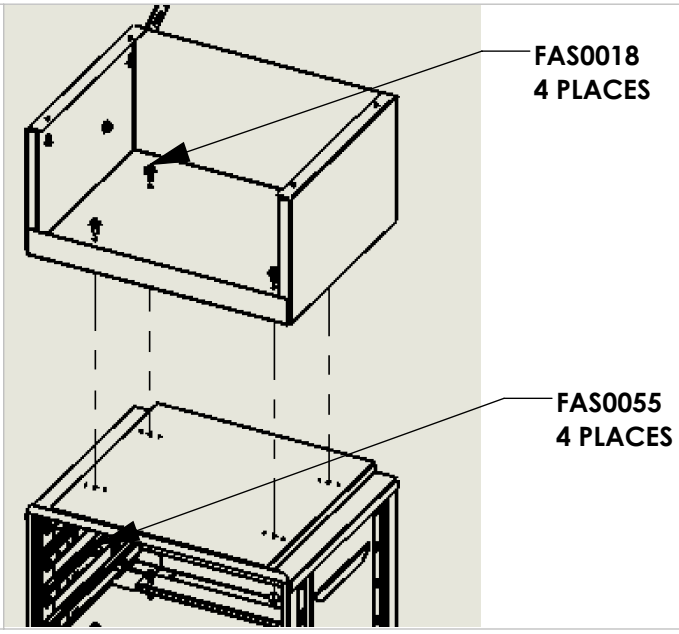

STEP 5 - MOUNT WORKBENCH TOPS

Step 5.1
ASSEMBLE 60105 WORKBENCH TOP PER UNIT INSTRUCTION. LEAVE OFF 60102-G FROM EACH END.

MOUNT 60105 WORKBENCH TOP.
BE SURE TO LINE UP THE END OF THE BENCH TOP TO THE SIDE OF THE DRAWER UNIT.
**EXACT PLACEMENT ATOP THE DRAWER UNITS WILL VARY BY VAN MODEL.*

ATTACH BENCH TOP WITH FAS0691 SCREWS THRU THE OUTERMOST HOLES (SMALL) IN THE DRAWER UNIT.

VIEW SHOWN FROM BELOW WORKBENCH TOP

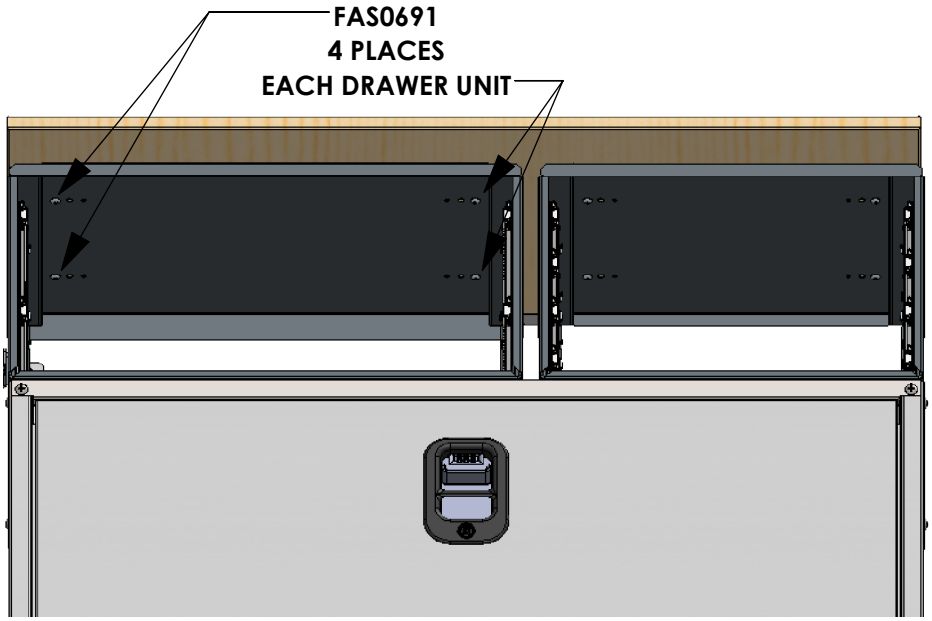

STEP 5 - MOUNT WORKBENCH TOPS

Step 5.2
ATTACH 60102-G BRACKET, CENTERED ACROSS THE WORKBENCH SEAM WITH FAS0691

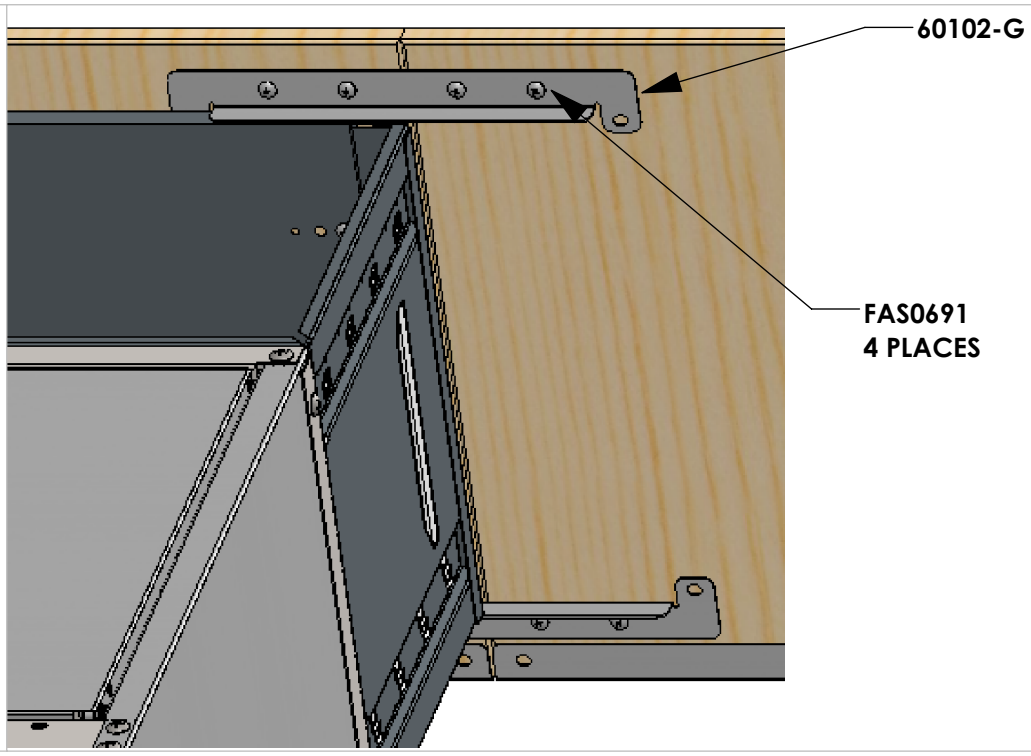

STEP 6 - MOUNT KEY MACHINE BASE - IF APPLICABLE

Step 6.1
WHEN MOUNTING THE KMB BE SURE TO ALIGN THE UNIT SO THAT WHEN DRILLING, YOU DON'T DRILL INTO THE VERTICAL EDGES OF THE DRAWER UNITS.
THE KMB SHOULD BE 1.5" AWAY FROM THE 60100-G RAIL. USE FAS0079 AND FAS0055 TO ATTACH THE KMB.

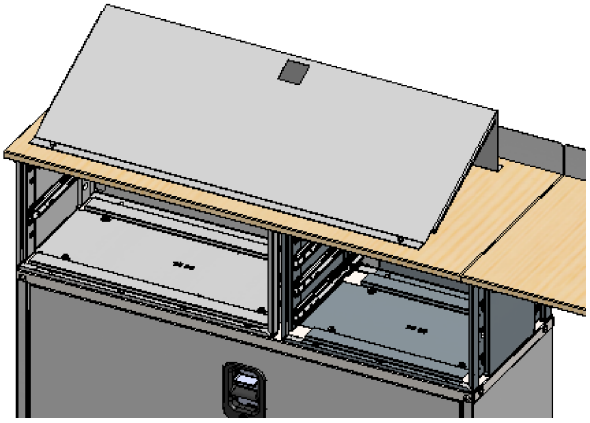

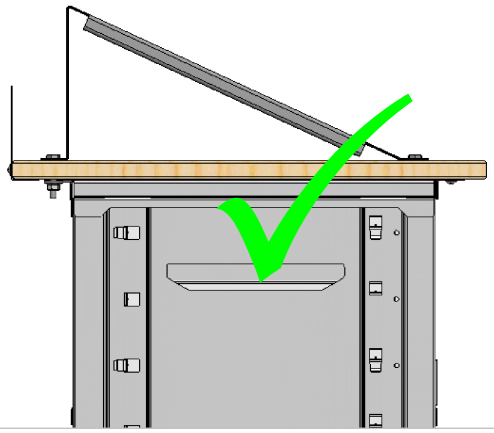

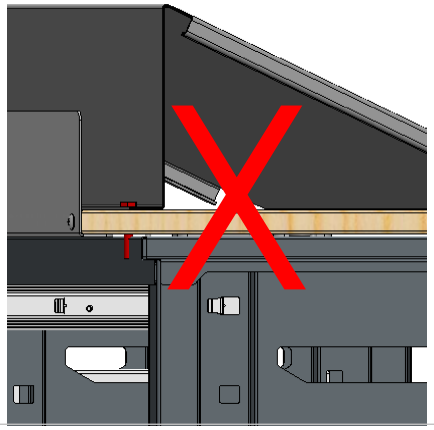

STEP 7 - ATTACH MOUNTING BRACKETS TO MODULE

Step 9.1 MOUNTING BRACKETS MUST BE ATTACHED TO THE VEHICLE BELTLINE, MODELS VARY.

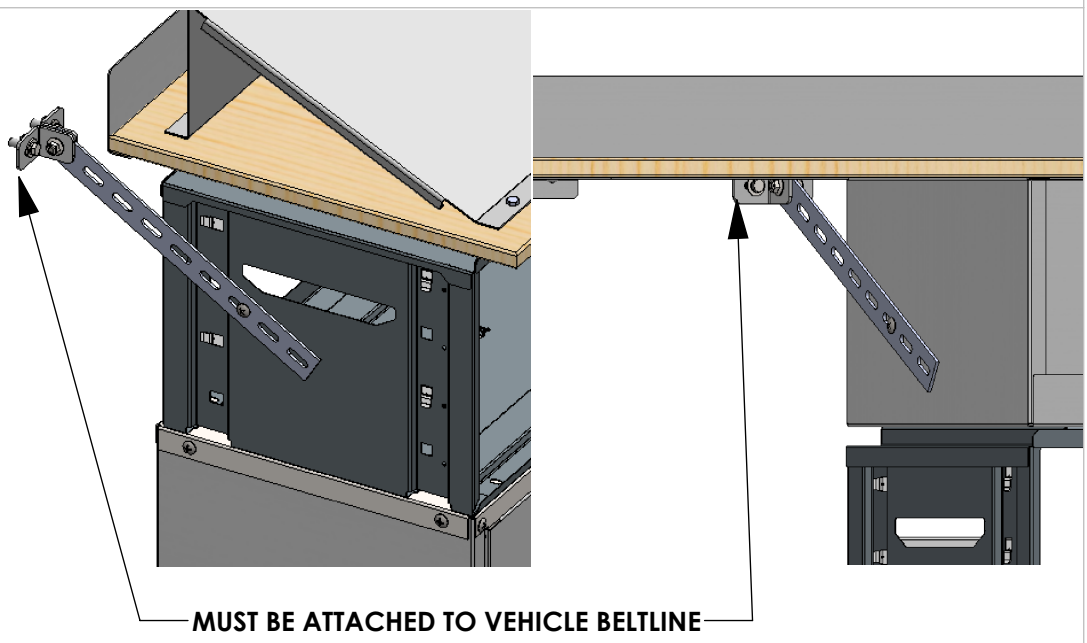

BE SURE ALL FASTENERS ARE FULLY TIGHTENED

INSTALLATION IS COMPLETE

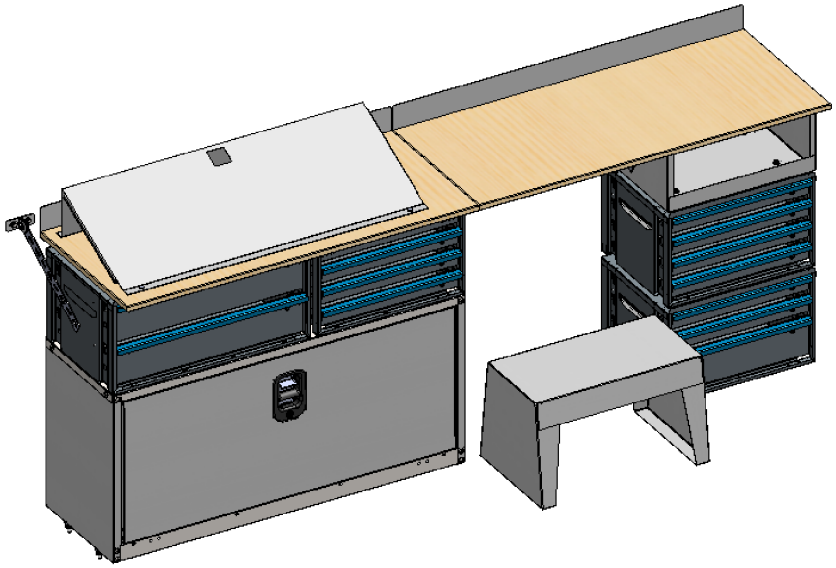

ADRIAN STEEL
Cargo Management Solutions for Commercial Vehicles

DRAWER UNIT, 14X18, A, 4, S

PRODUCT WEIGHT

35.10 LBS

WIDTH X DEPTH X HEIGHT

18" X 14" X 11.5"

CAPACITY

15LBS. PER SHALLOW DRAWER

COLOR

ASC BLUE & GRAY

CATALOG NUMBER

ADUK1418A4S

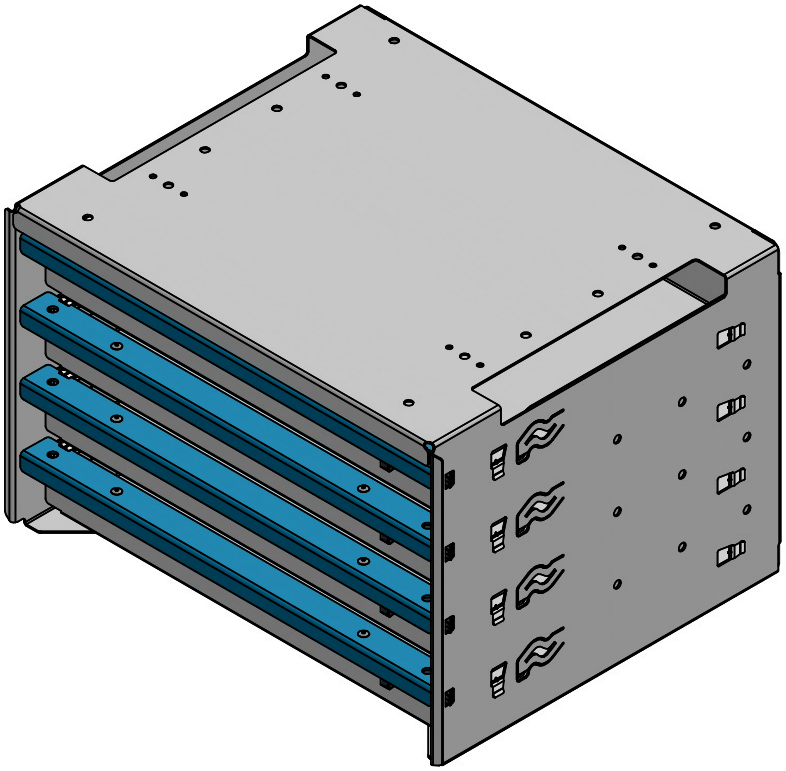

PRODUCT FEATURES

SEE PAGE 2 FOR APPLICATION NOTES, ACCESSORIES AND OTHER PRODUCTS THAT WORK WITH THIS UNIT.

ADRIAN STEEL
Cargo Management Solutions for Commercial Vehicles

DRAWER UNIT, 14X18, A, 4, S

CATALOG NUMBER **ADUK1418A4S**

PRODUCT APPLICATION

This unit is designed to be installed on Adrian Shelving with the use of the included riser kit or by stacking with other units and mounting directly to vehicle (not included).

NOTE: * - XX = WIDTH, # = NUMBER OF SHELVES
(EXAMPLE - ASFK2T1448G4)

ACCESSORIES THAT WILL WORK WITH THIS PRODUCT

CATALOG NUMBER	DESCRIPTION (smart)
ADURK18	DRAWER UNIT, RISER KIT, 18
ADUK14182T	DRAWER UNIT, 14X18, A, 2, T
ADUK14183C	DRAWER UNIT, 14X18, A, 3, C
*ASFK2T14XXG#	NEXT GENERATION SHELVING KITS

The information contained in this document is the sole property of ADRIAN STEEL COMPANY. ADRIAN STEEL COMPANY retains the right to modify and/or change the product of its design at any time with prior notification.

THIS INSTRUCTION IS TO DEMONSTRATE THE ASSEMBLY AND INSTALLATION OF THE

ADRIAN SHELVING DRAWER UNIT PRODUCT LINE

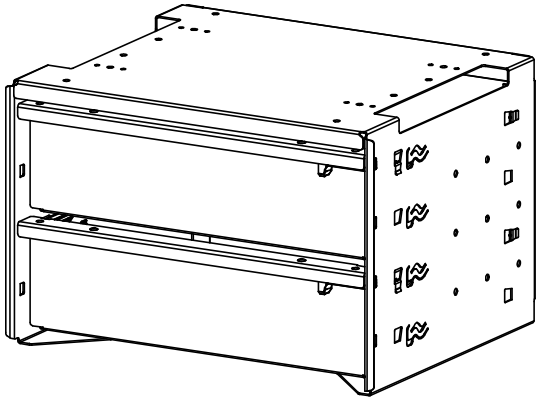

ADUA1418A2T
ADUA1424A2T
ADUA1618A2T
ADUA1624A2T

ADURK18G

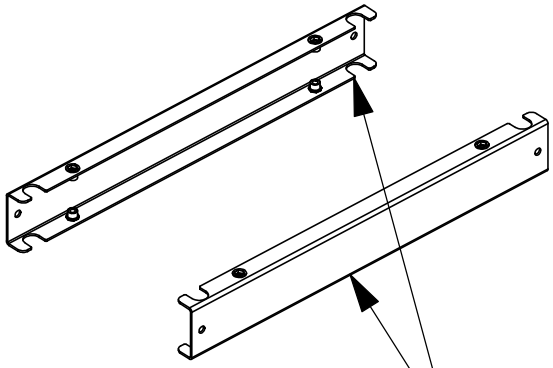

ADUR18-G

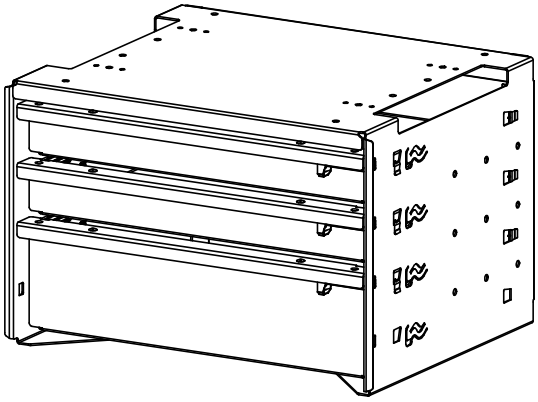

ADUA1418A3C
ADUA1424A3C
ADUA1618A3C
ADUA1624A3C

ADURK24G

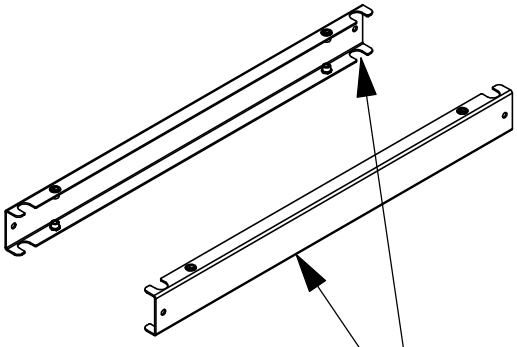

ADUR24-G

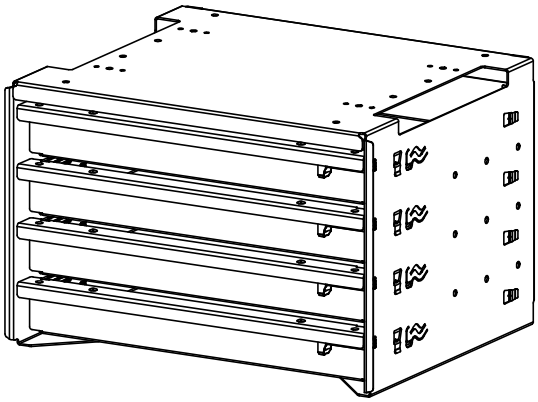

ADUA1418A4S
ADUA1424A4S
ADUA1618A4S
ADUA1624A4S

TOOLS NEEDED:

- IMPACT
- DRILL
- RIVET TOOL
- 7/16" SOCKET
- 7/16" WRENCH
- #3 PHILLIPS DRIVER
- 9/32" OR "K" DRILL BIT

BEST PRACTICES

GET TO KNOW THE VEHICLE - AT THE BEGINNING OF ANY INSTALLATION, CHECK THE LOCATION OF THE FUEL TANK, FUEL LINES, BRAKE LINES, HIGH VOLTAGE BATTERIES AND WIRING HARNESSES TO AVOID INJURY OR PROPERTY DAMAGE FROM TOOL CONTACT.

SEAL ALL EXTERIOR HOLES - ALL INSTALLATION HOLES SHOULD BE SEALED WITH BUTYL TAPE OR SILICON TO PREVENT WATER AND EXHAUST GASES FROM ENTERING THE VEHICLE.

CONTROL DRILL DEPTH - TO AVOID DAMAGE TO THE VEHICLE, USE A DRILL STOP OR CLEARED STEP BIT WHEN DRILLING INSTALLATION HOLES.

ALWAYS ADD PRIMER - WHEN ADDING INSTALLATION HOLES BE SURE TO USE A SELF-ETCHING PRIMER TO PREVENT CORROSION, FASTENER FAILURE AND INJURY.

MOUNTING POINTS MUST HAVE METAL-TO-METAL CONTACT - USE PROVIDED MOUNTING SPACERS TO ACCOMMODATE FOR VEHICLE FEATURES, CARPET OR SUBFLOORS.

PROVIDE CLEARANCE FOR SPACERS - IF THE INSTALLATION VEHICLE CONTAINS A CARPET OR SUBFLOOR, USE A 1-3/16" DIAMETER CARPET CUTTER (P/N: 31183-0) AT ALL MOUNTING LOCATIONS TO OPEN UP ROOM FOR SPACERS.

CHECK SPACER ORIENTATION - BE SURE THAT THE INDENT IN THE SPACER COVERS THE PLUSNUT HEAD; THIS ENSURES THE MOST METAL-TO-METAL CONTACT AND REDUCES VIBRATION.

PLUSNUT INSTALLATION - A PLUSNUT GUN IS RECOMMENDED FOR PLUSNUT INSTALLATION FOR ITS PRODUCTION SPEED. HOWEVER, A PLUSNUT SETTING TOOL CAN ALSO BE USED (P/N: 22200-0).

THRU-BOLT CLEARANCE - WHEN USING A THRU-BOLT AT ANY MOUNTING LOCATION, BE SURE THAT YOUR HOLE HAS 1/16" CLEARANCE.

BEST PRACTICE: ORGANIZE ALL FASTENERS & VERIFY THAT ALL ARE ACCOUNTED FOR

PAGE: 3

FASTENERS USED

BAG REFERENCE: **BAGADU**

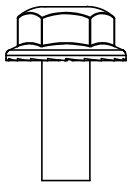

FAS0018
HEX FLANGE BOLT
1/4-20 X .63 LG
QTY: 04

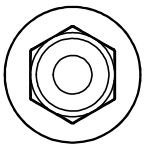

FAS0055
NYLOK FLANGE NUT
1/4-20 HEX
QTY: 04

FASTENERS USED

BAG REFERENCE: **BAGADURK**

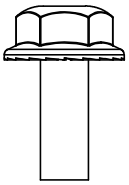

FAS0018
HEX FLANGE BOLT
1/4-20 X .63 LG
QTY: 08

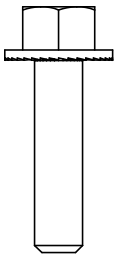

FAS0033
HEX FLANGE BOLT
1/4-20 X 1.00 LG
QTY: 02

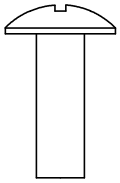

FAS0062
TRUSS HEAD PHILLIPS BOLT
1/4-20 X .75 LG
QTY: 02

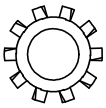

FAS0066
STAR LOCK WASHER
1/4
QTY: 02

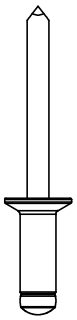

FAS0986
FLUSH MOUNT POP RIVET
3/16 X .188-.125
QTY: 04

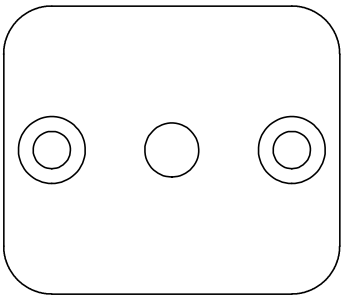

FADUSPACER
DRAWER UNIT SPACER
QTY: 02

INTENTIONALLY LEFT BLANK

STEP 1 - REMOVE DRAWERS FROM WRAPPER

Step 1.1

DISENGAGE TABS IN SLIDES TO REMOVE DRAWERS FROM WRAPPER BODY

THIS IS TO PROVIDE ACCESS TO MOUNTING HOLES AND ALLOW SUFFICIENT TOOL CLEARANCE

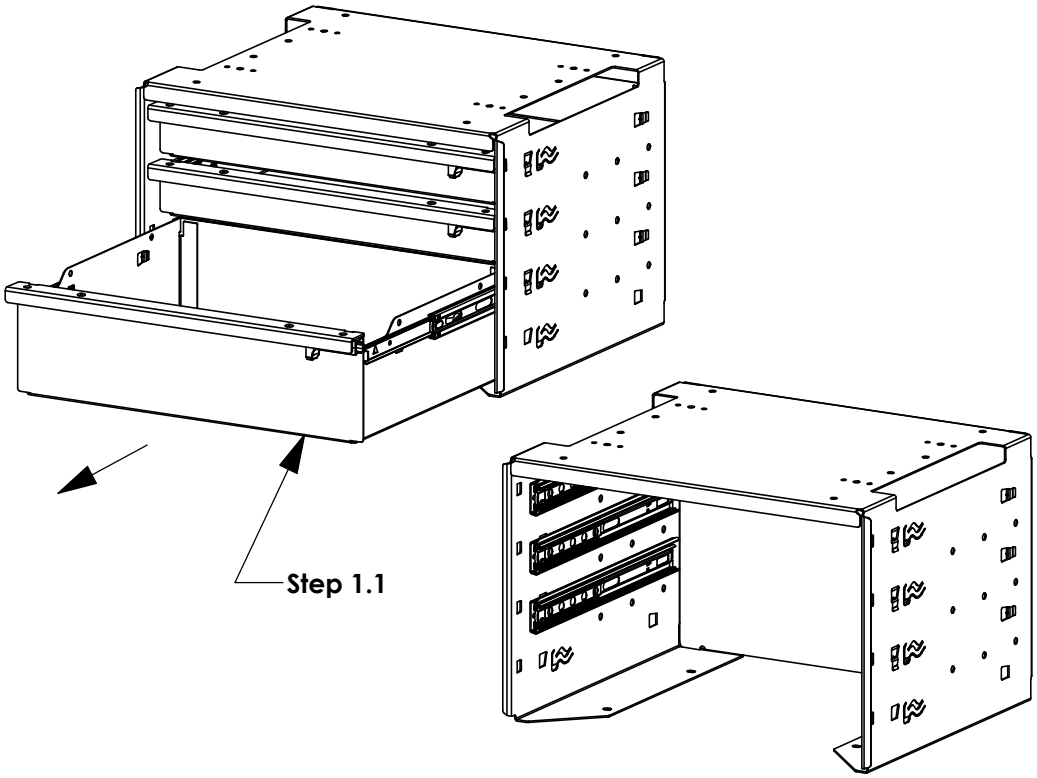

STEP 2 - STACKING DRAWER UNITS
****SKIP TO STEP 3 IF INSTALLING DRAWER UNIT(S) ON SHELVING UNIT*

Step 2.1

<u>FULLY TIGHTEN</u>
FAS0018 AND FAS0055

(04 PLACES)
7/16" WRENCH
7/16 "SOCKET

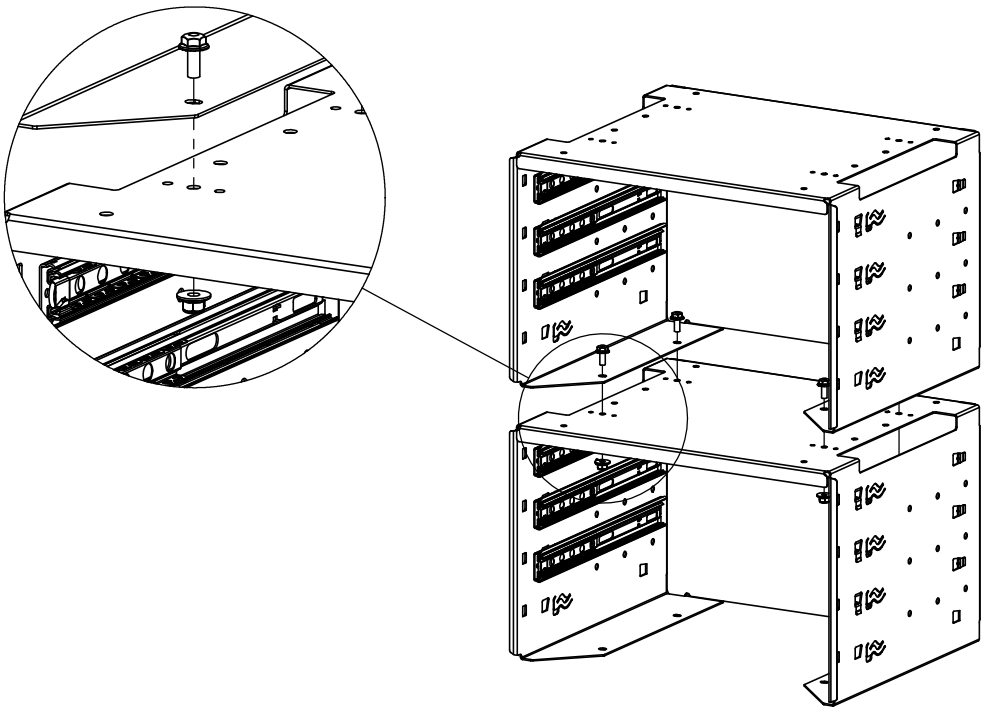

IF INSTALLING SHELF DIVIDERS ABOVE DRAWER UNIT, INSTALL THOSE AT THIS TIME!

DRAWER UNITS CAN BE INSTALLED ON SHELF AFTER THE SHELVING UNIT HAS BEEN INSTALLED IN THE VEHICLE!

STEP 3 - ATTACH SPACERS TO TOP OF DRAWER UNIT (SHELF INSTALL ONLY!)

Step 3.1

FULLY TIGHTEN
FADUSPACER AND
(2) FAS0986

(02 PLACES)
RIVET TOOL

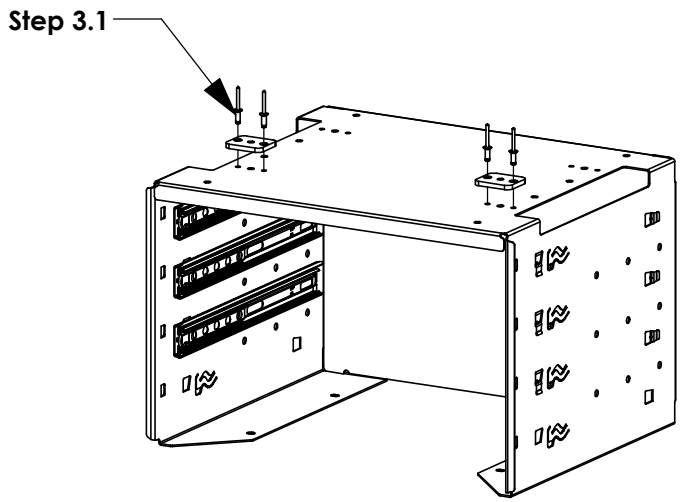

STEP 4 - ASSEMBLE RISER KIT TO SHELF (BOTTOM DRAWER UNITS ONLY!)

Step 4.1
FULLY TIGHTEN
FAS0018

(04 PLACES)
7/16" SOCKET

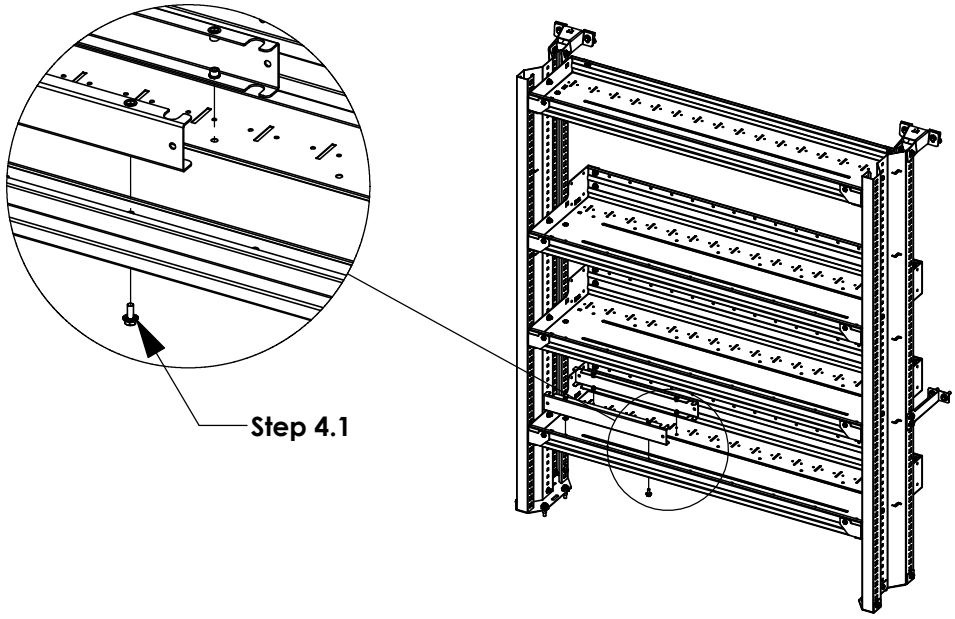

STEP 5A - ASSEMBLE REAR RISER TO SHELF (TOP DRAWER UNIT ONLY!)

Step 5A.1

FULLY TIGHTEN
FAS0062 AND FAS0066

(02 PLACES)
#3 PHILLIPS DRIVER

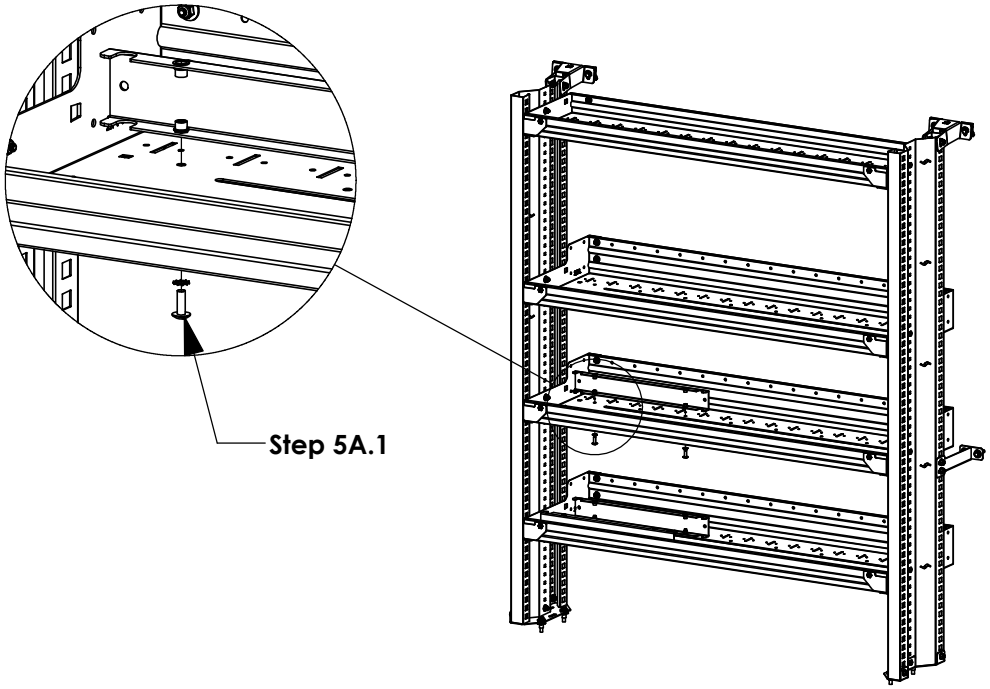

STEP 5B - ASSEMBLE FRONT RISER TO SHELF (TOP DRAWER UNIT ONLY!)

Step 5B.1

INSERT DRAWER-UNIT BELOW

Step 5B.2

FULLY TIGHTEN
FAS0033

(02 PLACES)
7/16 "SOCKET

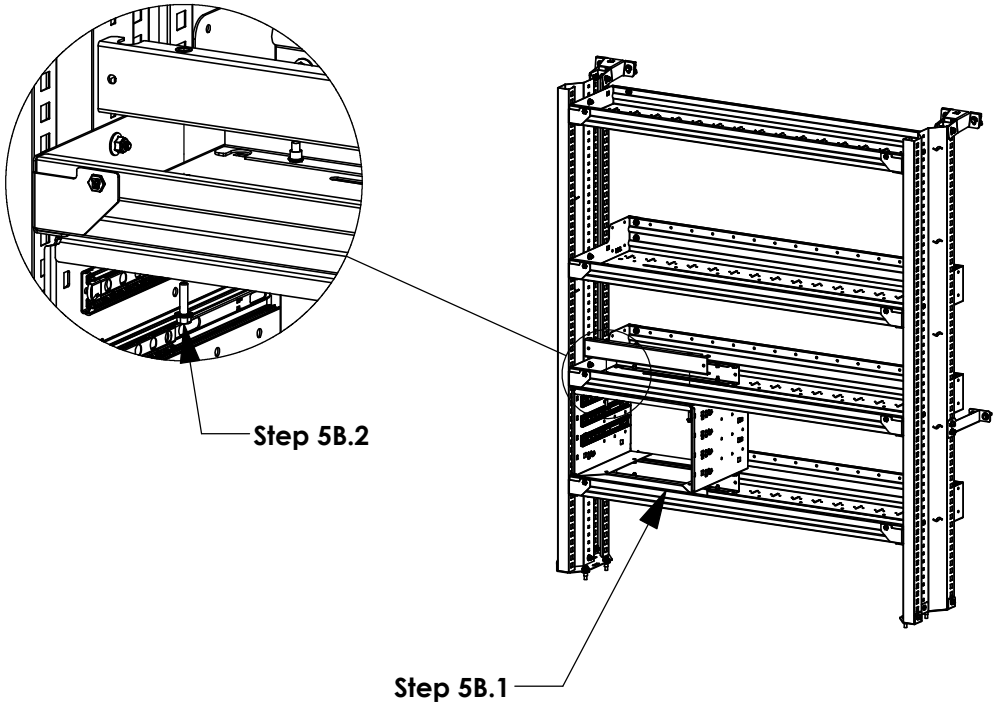

STEP 6 - ASSEMBLE DRAWER UNIT TO RISER

Step 6.1

<u>FULLY TIGHTEN</u>
FAS0018

(08 PLACES)
7/16" SOCKET

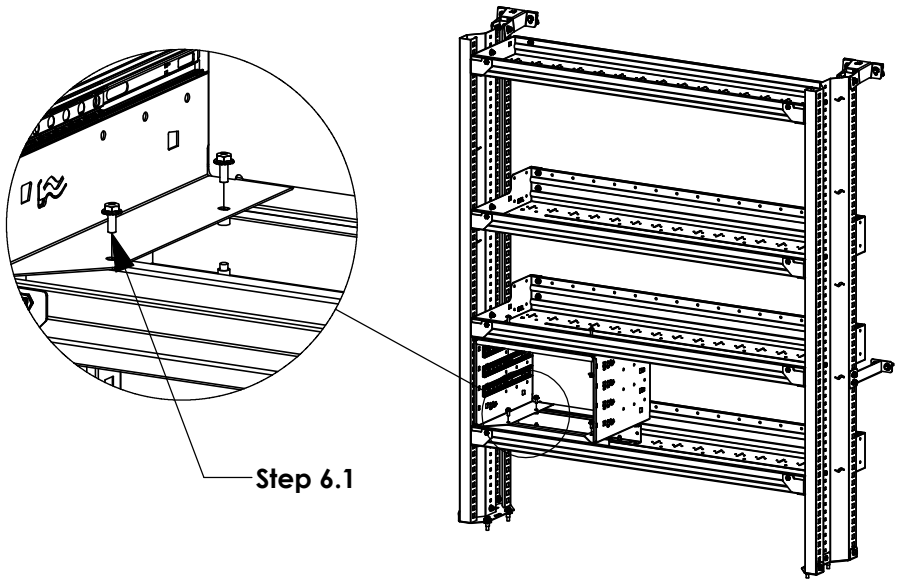

STEP 7 - ASSEMBLE TOP OF DRAWER UNIT TO SHELF ABOVE (TOP DRAWER UNIT ONLY!)

Step 7.1

IF INSTALLING ON SHELF DIRECTLY BELOW TOP SHELF, MARK AND DRILL HOLES TO MOUNT

9/32" OR "K" DRILL BIT (02 PLACES PER DRAWER UNIT)

Step 7.2

<u>FULLY TIGHTEN</u>
FAS0062 AND FAS0055

(02 PLACES)
#3 PHILLIPS DRIVER
7/16" SOCKET

FRONT HOLES ONLY!

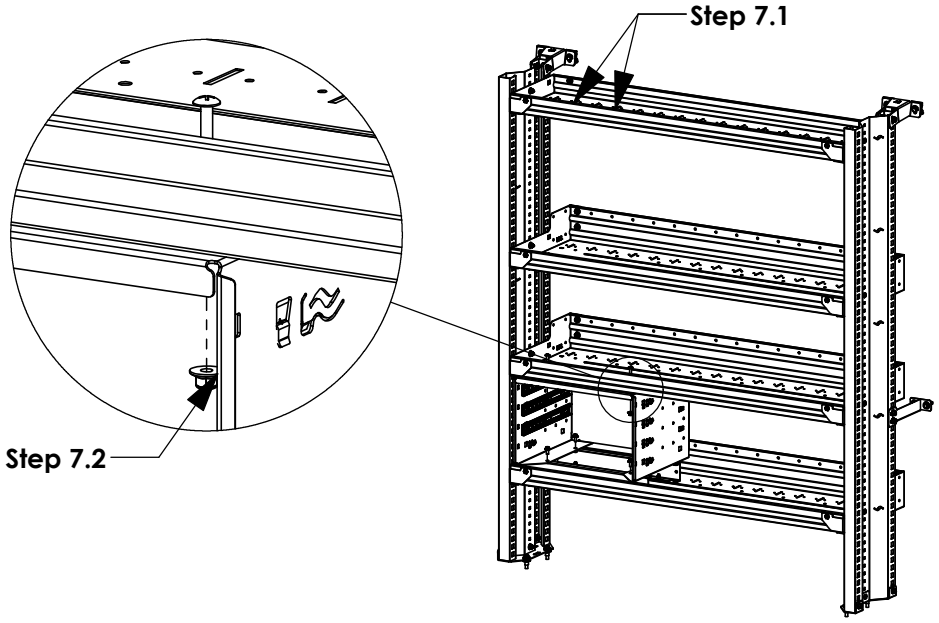

STEP 8 - INSERT DRAWERS BACK INTO SLIDES

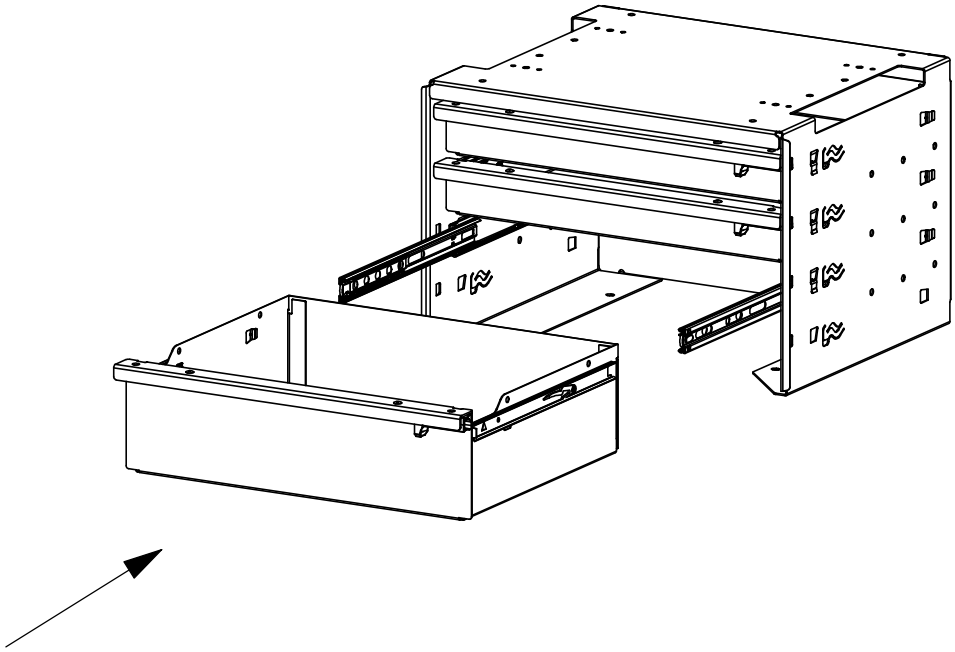

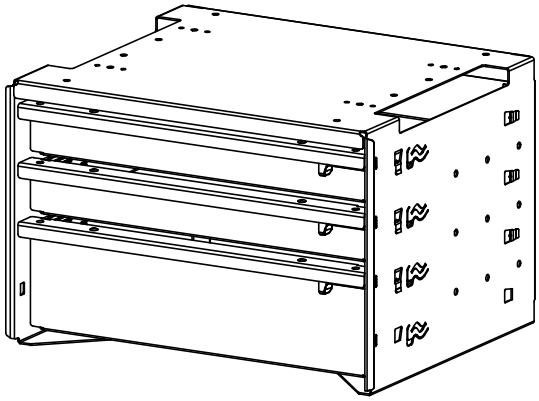

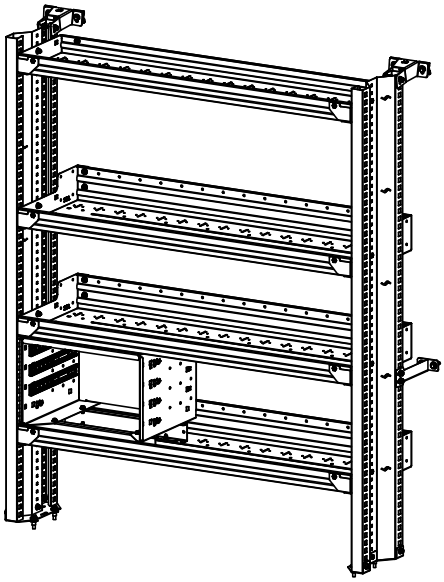

ASSEMBLY/INSATLLATION IS NOW COMPLETE!

ADRIAN STEEL
Cargo Management Solutions for Commercial Vehicles

DRAWER UNIT, 14X24, A, 2, T

PRODUCT WEIGHT

33.04 LBS

WIDTH X DEPTH X HEIGHT

24" X 14" X 11.5"

CAPACITY

25LBS PER DEEP DRAWER

COLOR

ASC BLUE & GRAY

CATALOG NUMBER

ADUK1424A2T

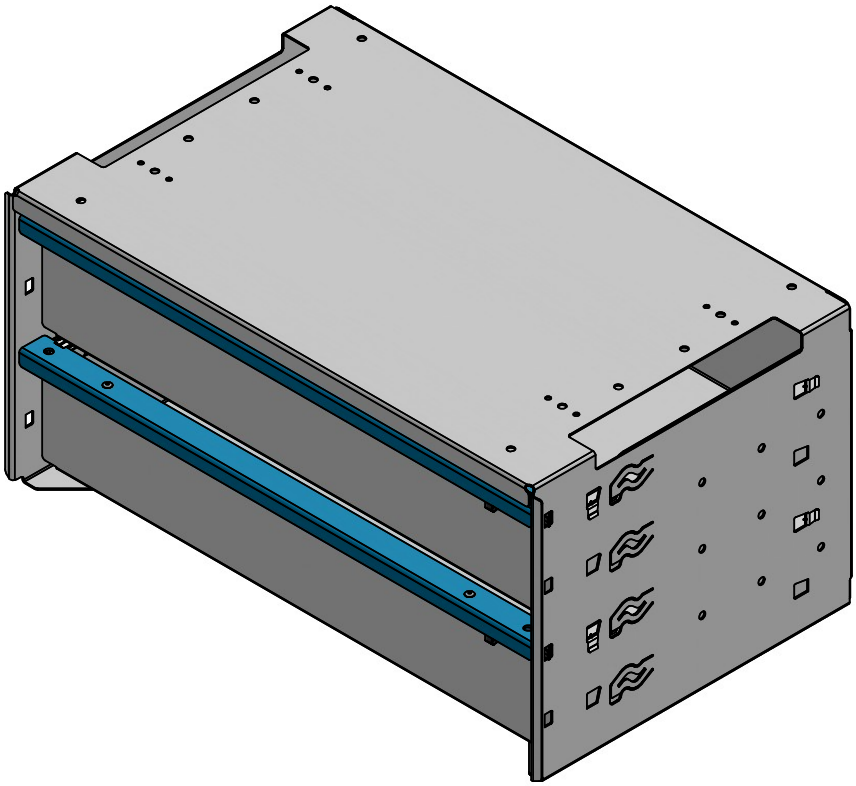

PRODUCT FEATURES

SEE PAGE 2 FOR APPLICATION NOTES, ACCESSORIES AND OTHER PRODUCTS THAT WORK WITH THIS UNIT.

ADRIAN STEEL
Cargo Management Solutions for Commercial Vehicles

DRAWER UNIT, 14X24, A, 2, T

CATALOG NUMBER **ADUK1424A2T**

PRODUCT APPLICATION

This unit is designed to be installed on Adrian Shelving with the use of the included riser kit or by stacking with other units and mounting directly to vehicle (not included).

NOTE: * - XX = WIDTH, # = NUMBER OF SHELVES
(EXAMPLE - ASFK2T1448G4)

ACCESSORIES THAT WILL WORK WITH THIS PRODUCT

CATALOG NUMBER	DESCRIPTION (smart)
ADURK24	DRAWER UNIT, RISER KIT, 24
ADUK14243C	DRAWER UNIT, 14X24, A, 3, C
ADUK14244S	DRAWER UNIT, 14X24, A, 4, S
*ASFK2T14XXG#	NEXT GENERATION SHELVING KITS

The information contained in this document is the sole property of ADRIAN STEEL COMPANY. ADRIAN STEEL COMPANY retains the right to modify and/or change the product of its design at any time with prior notification.

ITEM NO.	PART NO.	DESCRIPTION	QTY.
1	MB120	MOUNTING STRAP	1
2	MB118	MOUNT ANGLE/GALV	2

THIS IS A TYPICAL TEE BRACKET MOUNTING SET-UP FOR MOUNTING KD UNITS OR MODULES TO THE HEADER RAIL OF THE VEHICLE.

	ASSEMBLY FASTENERS	QTY
A	1/4-20 X 3/4 HH.SCW.	1
A	1/4-20 HEX FLANGE NUT	2
B	1/4-20 X 1/2 THP.SCW.	1

	INSTALLATION FASTENERS	QTY
C	1/4-20 PLUSNUT "PB"	2
C	1/4 SPLIT RING L'WASHER	2
C	1/4 PLAIN FLAT WASHER	2
C	1/4-20 X 1 HH.SCW.FT.	2
C	1/4-20 X 1-1/2 HH.SCW.FT.	1

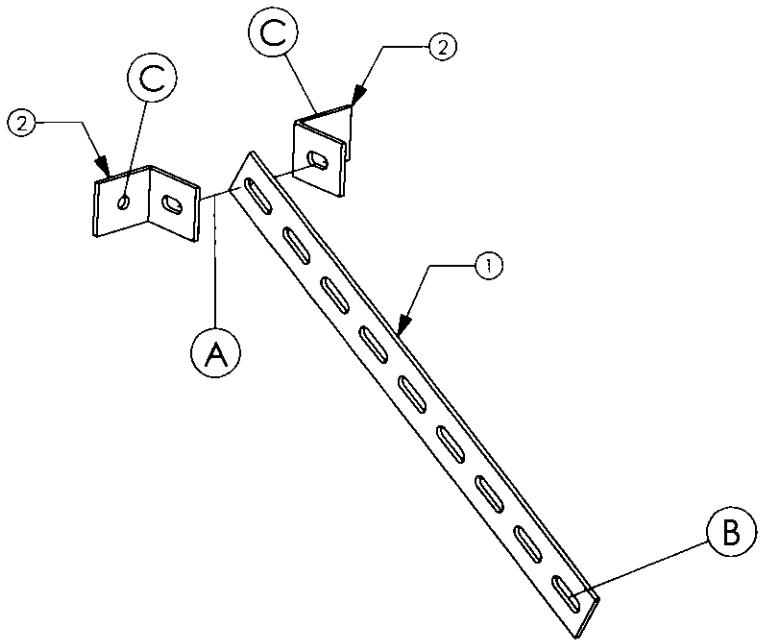

ADRIAN STEEL
906 JAMES ST.
ADRIAN, MI. 49221
(517) 265-6194

THIS DRAWING IS THE PROPERTY OF ADRIAN STEEL Co.
THIS DRAWING IS NOT TO BE USED IN ANY MANNER DETRIMENTAL TO THE INTERESTS OF ADRIAN STEEL Co.

RELEASED CHK'D: BDS
EN-6071 6/8/02 MAE

REVISED CHK'D: TMR
EN-7197 2/20/04 BDS
Description:
REDRAWN IN SOLIDWORKS

REVISED CHK'D: ???
EN-0000 00/00/00 ???
Description:
TEXT

STANDARD TOLERANCES UNLESS OTHERWISE NOTED:
0.0 = ± .125
0.00 = ± .062
0.000 = ± .031
0° = ± 2°
0.0° = ± 1°
Material Thickness = per AISI
Notches, Slots, Holes = ± .015

MATERIAL: .125 GALV BAR
Area (Sq.Ft.):
Weight (lbs.): **0.89**

FINISH: NATURAL
Coverage (Sq.Ft.):
Weight (lbs.):

DESIGNED BY	DRAWN BY	CHECKED BY
BDS	BDS	

SCALE: 1:4 **DATE: 2/20/04**

Part Description
TEE BRACKET ASSY
( )

Size A SHEET 1 of 1

Print Number **A-MB115** Issue **A**

Workbench Top 18” X 42”

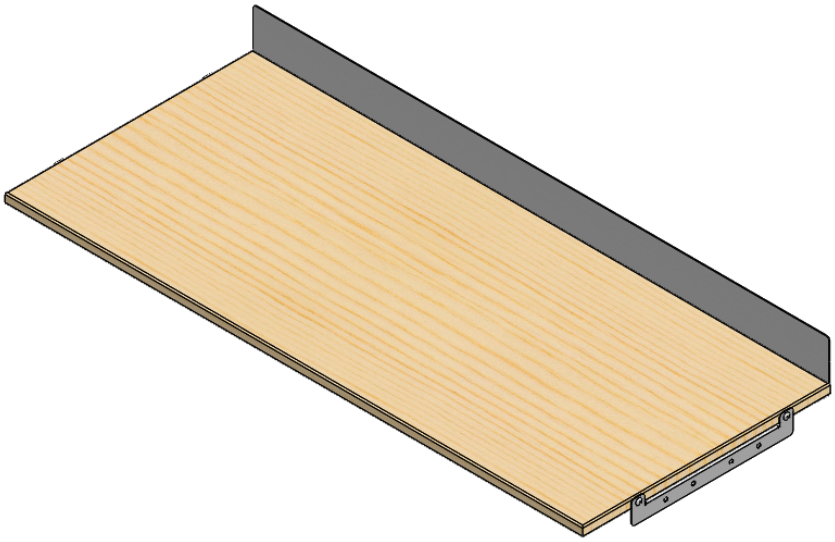

PRODUCT WEIGHT

11 lbs

WIDTH x DEPTH x HEIGHT

42” X 18” X 3 5/8”

CAPACITY

N/A

COLOR

BALTIC BIRCH / GRAY

CATALOG NUMBER

60105

PRODUCT FEATURES

This Workbench top is designed to mount atop any 12X42 module arrangement and/or framework of KD parts

Some drilling may be required.

The information contained in this document is the sole property of ADRIAN STEEL COMPANY. ADRIAN STEEL COMPANY retains the right to modify and/or change the product of its design at any time without prior notification.

ADRIAN STEEL®

Cargo Management Solutions for Commercial Vehicles

Assembly/Installation Instructions and Owners Manual

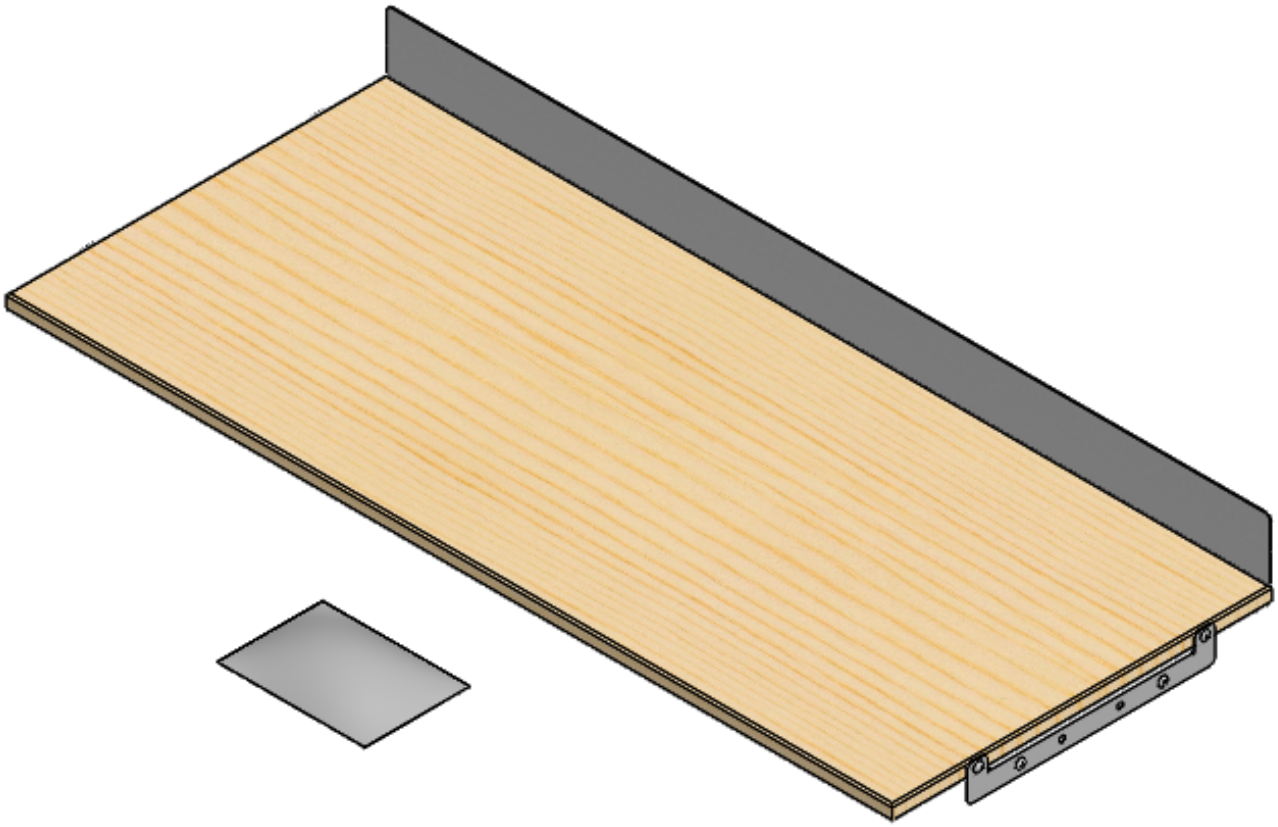

60105

WORKBENCH TOP 18” x 42”

ADRIAN STEEL COMPANY ● WWW.ADRIANSTEEL.COM ● 906 JAMES STREET ● ADRIAN, MI 49221 ● 800-677-2726

Publication Number: 61918 Revision Level: B ECN Release: 23976

- PRECAUTIONS -

CAUTION

THE USE AIR IMPACT TOOLS CAN OVER-TORQUE FASTENERS AND CAUSE FASTENER FAILURE!

CAUTION

ALL INSTALLATION HOLES SHOULD BE SEALED WITH SILICON OR BUTYL SEALANT TO PREVENT EXHAUST FUMES FROM ENTERING THE VEHICLE!

DANGER

INSPECT FOR FUEL TANK, FUEL LINES, BRAKE LINES, HIGH VOLTAGE BATTERIES AND ELECTRICAL LINES PRIOR TO DRILLINGTO AVOID DAMAGING CRITICAL VEHICLE SYSTEMS OR INJURY TO INSTALLER DURING INSTALLATION PROCESS!

CAUTION

TO AVOID DAMAGING THE VEHICLE ALWAYS USE DRILL STOPS WHEN DRILLING ANY IN-STALLATION HOLES!

- IMPORTANT WARRANTY REQUIREMENTS -

1. **SUBSTITUTING ADRIAN STEEL SPECIFIED FASTENERS FOR ASSEMBLY AND/OR INSTALLATION WILL VOID YOUR PRODUCT WARRANTY.**
2. **ALL HOLES DRILLED INTO VEHICLE SHOULD HAVE THE RAW METAL EDGES SEALED WITH A SELF -ETCHING PRIMER TO RESIST CORROSION AND POTENTIAL FASTENER POINT FAILURE.**
3. **ALL FASTENERS USED IN THE INSTALLATION OF THIS PRODUCT SHOULD BE TIGHTENED TO THE TORQUE(S) SPECIFIED IN THESE INSTRUCTIONS.**
4. **THESE INSTRUCTIONS SHOULD BE KEPT WITH THE VEHICLE.**

THE BASIC TOOLS NEEDED FOR MOST INSTALLATIONS

DRILL

DRILL BIT WITH STOP

RATCHET, SOCKETS AND/OR WRENCHES

SCREWDRIVERS

MEASURING TAPE

ADDITIONAL TOOLS MAY BE NEEDED FOR THIS INSTALLATION AND THEY WILL BE IDENTIFIED IN THE STEPS THAT FOLLOW.

PARTS YOU WILL USE FOR STEP 01	FAS0691, SCREW, THP T(13) REQUIRED	PHILLIPS HEAD DRILL	60102-G, WORKBENCH SIDE BRACKET, GRAY	60100-G, WORKBENCH BACK RAIL, GRAY
	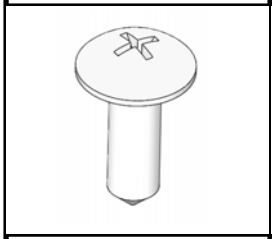		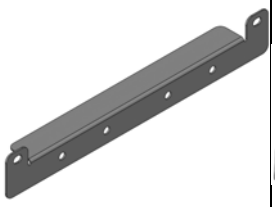	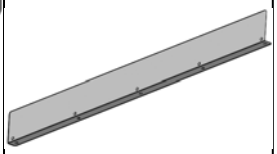
	60101, RUSSIAN BIRCH 18 X 42			

Instructions for Step 01

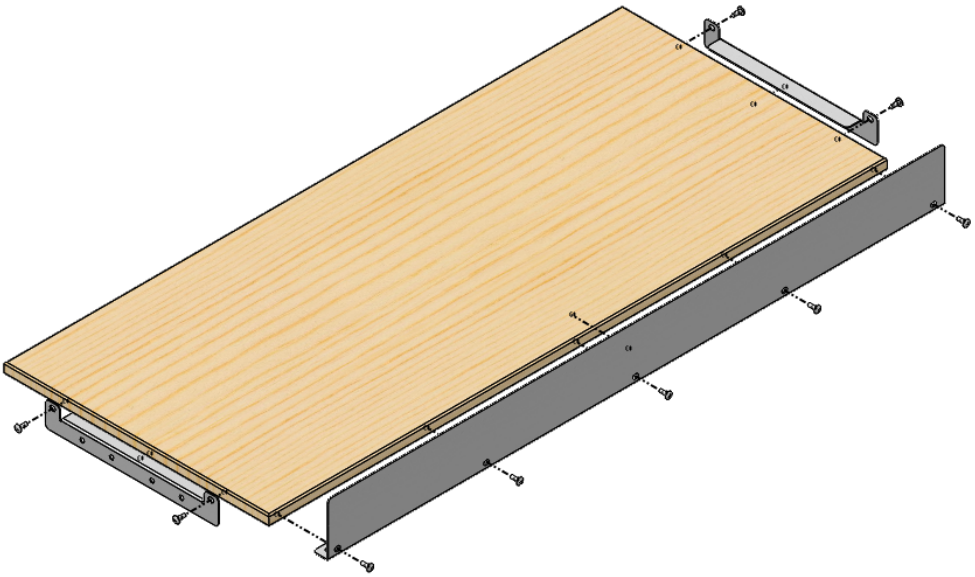

Install 60100-G back rail to 60101 Russian Birch using FAS0691 (x5).

Install 60102-G side bracket to each end of 60101 Russian Birch; Install side brackets based upon desired lip length.

There should be four (4) FAS0691 Screw, THP TEK left over in which you may use to install workbench top to supporting structure.

PARTS YOU WILL USE FOR STEP 01	FAS0691, SCREW, THP T(13) REQUIRED	PHILLIPS HEAD DRILL	60102-G, WORKBENCH SIDE BRACKET, GRAY	60100-G, WORKBENCH BACK RAIL, GRAY
	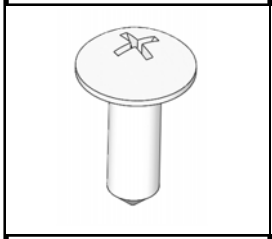		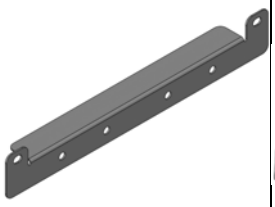	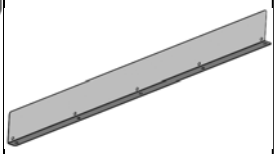
	60101, RUSSIAN BIRCH 18 X 42			
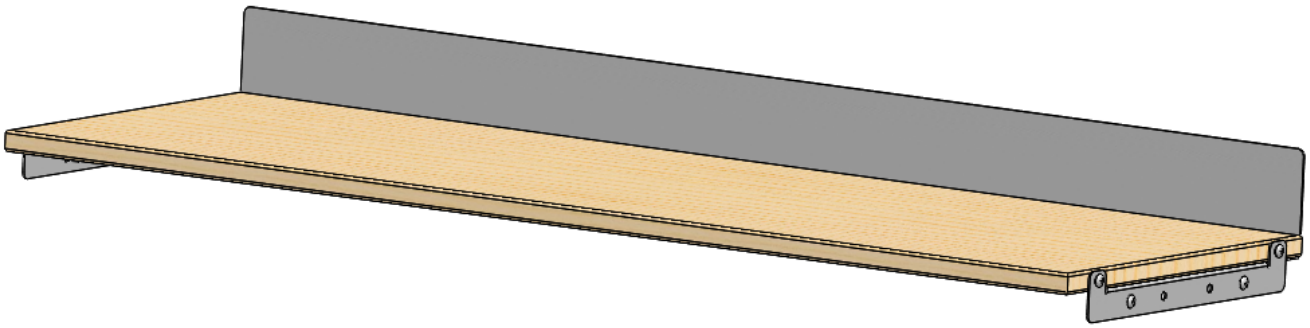
INSTALLATION COMPLETE