ADRIAN STEEL
Cargo Management Solutions for Commercial Vehicles

SF UNT, T, 2T, 16X48, EBL, A, 3

PRODUCT WEIGHT

69.0 LBS

WIDTH X DEPTH X HEIGHT

48" X 16" X 30"

CAPACITY

50LBS. PER LFT., PER SHELF

COLOR

GRAY & BLUE

CATALOG NUMBER

AST-2T1648EBLA

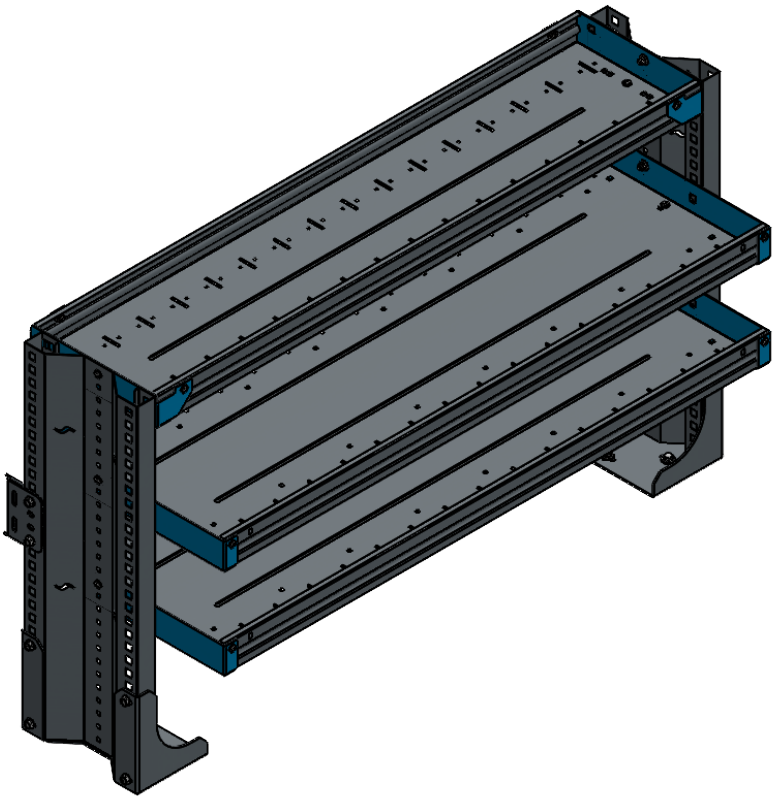

PRODUCT FEATURES

This shelving unit is designed to maximize the shelving with a tank rack on the extendobed. The top shelf is fixed to mount to the vehicle and the lower shelves can be adjusted in 1-inch increments to best fit accessories and the user's tools and consumable. The shelves have built-in features to integrate bins,drawer units, and door kits. Constructed from high-strength low-alloy (HSLA) steel, each shelf can hold up to 50 lbs. per linear foot, providing strong support for the day to day needs of the technician.

SEE PAGE 2 FOR APPLICATION NOTES, ACCESSORIES AND OTHER PRODUCTS THAT WORK WITH THIS UNIT.

ADRIAN STEEL
Cargo Management Solutions for Commercial Vehicles

SF UNT, T, 2T, 16X48, EBL, A, 3

CATALOG NUMBER **AST-2T1648EBLA**

PRODUCT APPLICATION

This shelving unit is designed to maximize the shelving with a tank rack on the Extendobed.

ACCESSORIES THAT WILL WORK WITH THIS PRODUCT

CATALOG NUMBER	*DESCRIPTION (smart)*
906BIN616	906 BIN, 6W X 16D
906BIN1216	906 BIN, 12W X 16D
DIV16	SHELF DIVIDER, 16D
ADUK1618A2T-RI	DRAWER UNIT, 16X18, A, 2, T, R
ADUK1618A3C-RI	DRAWER UNIT, 16X18, A, 3, C, R
ADUK1618A4S-RI	DRAWER UNIT, 16X18, A, 4, S, R
ADUK1424A2T-RI	DRAWER UNIT, 14X24, A, 2, T, R
ADUK1424A3C-RI	DRAWER UNIT, 14X24, A, 3, C, R
ADUK1424A4S-RI	DRAWER UNIT, 14X24, A, 4, S, R
ADK1048A	DOOR KIT,10X48,A

The information contained in this document is the sole property of ADRIAN STEEL COMPANY. ADRIAN STEEL COMPANY retains the right to modify and/or change the product of its design at any time with prior notification.

END CAP KIT, 2T, 16D, A, 3

PRODUCT WEIGHT

10.41 LBS

WIDTH X DEPTH X HEIGHT

12" x 3.125 TOP END CAP
16" X 3.25 LOWER END CAPS

CAPACITY

N/A

COLOR

ASC BLUE

CATALOG NUMBER

AECK2T16A3

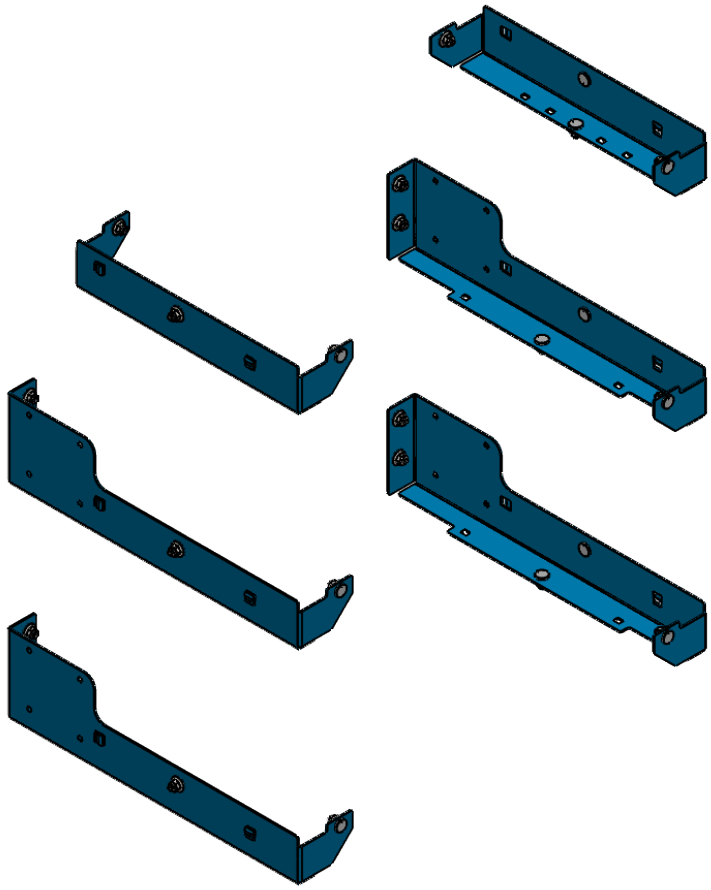

PRODUCT FEATURES

This kit contains end caps that connect the shelves to the end panels. The end caps clip into the square cut-outs on the end panels and are secured using a single set of fasteners. The end caps can be mounted to the end panels at any height as long as the vehicle body allows. This kit contains two sets (left and right) of 16" end caps and one set of 12" end caps.

SEE PAGE 2 FOR APPLICATION NOTES, ACCESSORIES AND OTHER PRODUCTS THAT WORK WITH THIS UNIT.

END CAP KIT, 2T, 16D, A, 3

CATALOG NUMBER **AECK2T16A3**

PRODUCT APPLICATION

This kit contains 3 sets of end caps, which are typical for use with 49" end panels. However, this kit is compatible with any height of end panel.

ACCESSORIES THAT WILL WORK WITH THIS PRODUCT

CATALOG NUMBER	*DESCRIPTION (smart)*
AEPK1049	END PANEL KIT, 10X49, G
AEPK1063	END PANEL KIT, 10X63, G
AEPK1068	END PANEL KIT, 10X68, G
AEPK1068-PM	END PANEL KIT, 10X68, PM, G
ASFK2T1624G3	SHELF KIT, 2T, 16X24, G, 3
ASFK2T1630G3	SHELF KIT, 2T, 16X30, G, 3
ASFK2T1636G3	SHELF KIT, 2T, 16X36, G, 3
ASFK2T1642G3	SHELF KIT, 2T, 16X42, G, 3
ASFK2T1648G3	SHELF KIT, 2T, 16X48, G, 3
ASFK2T1654G3	SHELF KIT, 2T, 16X54, G, 3
ASFK2T1660G3	SHELF KIT, 2T, 16X60, G, 3
ASFK2T1666G3	SHELF KIT, 2T, 16X66, G, 3
ASFK2T1672G3	SHELF KIT, 2T, 16X72, G, 3

The information contained in this document is the sole property of ADRIAN STEEL COMPANY. ADRIAN STEEL COMPANY retains the right to modify and/or change the product of its design at any time with prior notification.

THIS INSTRUCTION IS DEMONSTRATE THE ASSEMBLY AND INSTALLATION OF THE

ADRIAN TRUCK SHELVING PRODUCT LINE

TO FIND KIT PART NUMBERS AND PRODUCT STRUCTURES OF YOUR SPECIFIC SHELVING UNIT, PLEASE REFER TO PAGES 3 - 4

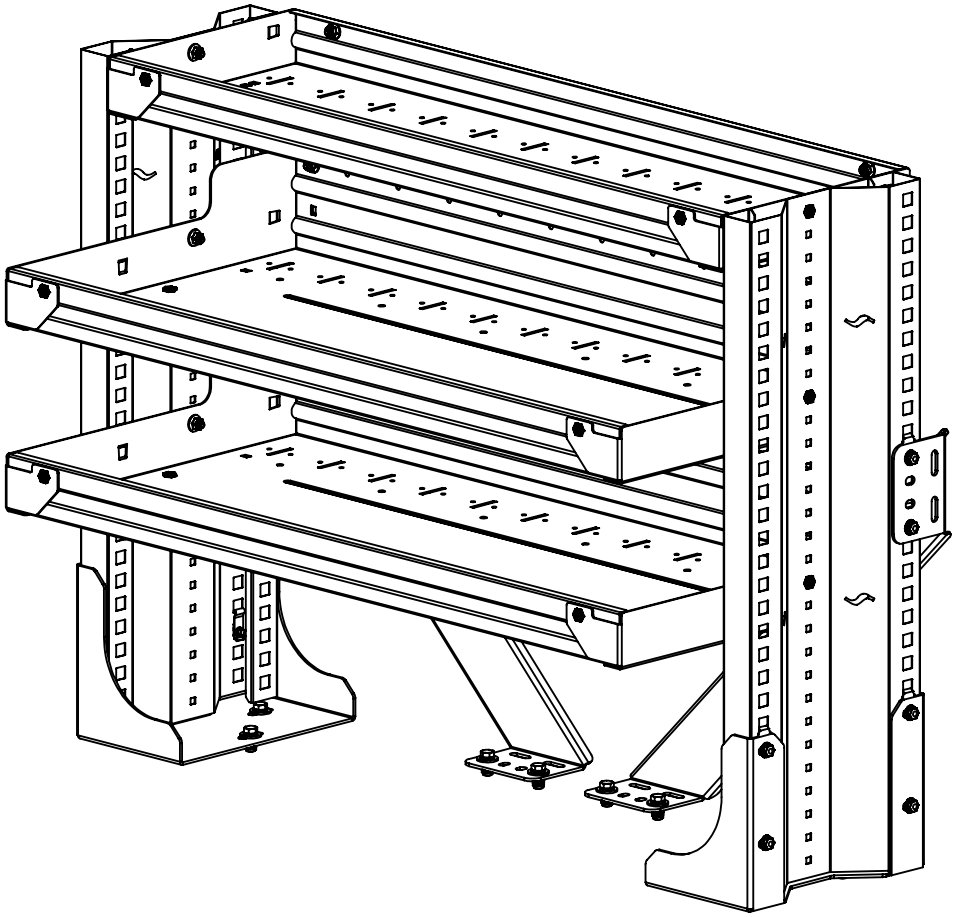

TOOLS NEEDED:

- TAPE MEASURE
- IMPACT
- DRILL
- 1/2" SOCKET
- 7/16" SOCKET
- 8mm ALLEN BIT
- 7/16" DRILL BIT
- MARKER
- RUBBER MALLET

BEST PRACTICES

GET TO KNOW THE VEHICLE - AT THE BEGINNING OF ANY INSTALLATION, CHECK THE LOCATION OF THE FUEL TANK, FUEL LINES, BRAKE LINES, HIGH VOLTAGE BATTERIES AND WIRING HARNESSES TO AVOID INJURY OR PROPERTY DAMAGE FROM TOOL CONTACT.

SEAL ALL EXTERIOR HOLES - ALL INSTALLATION HOLES SHOULD BE SEALED WITH BUTYL TAPE OR SILICON TO PREVENT WATER AND EXHAUST GASES FROM ENTERING THE VEHICLE.

CONTROL DRILL DEPTH - TO AVOID DAMAGE TO THE VEHICLE, USE A DRILL STOP OR CLEARED STEP BIT WHEN DRILLING INSTALLATION HOLES.

ALWAYS ADD PRIMER - WHEN ADDING INSTALLATION HOLES BE SURE TO USE A SELF-ETCHING PRIMER TO PREVENT CORROSION, FASTENER FAILURE AND INJURY.

MOUNTING POINTS MUST HAVE METAL-TO-METAL CONTACT - USE PROVIDED MOUNTING SPACERS TO ACCOMMODATE FOR VEHICLE FEATURES, CARPET OR SUBFLOORS.

PROVIDE CLEARANCE FOR SPACERS - IF THE INSTALLATION VEHICLE CONTAINS A CARPET OR SUBFLOOR, USE A 1-3/16" DIAMETER CARPET CUTTER (P/N: 31183-0) AT ALL MOUNTING LOCATIONS TO OPEN UP ROOM FOR SPACERS.

CHECK SPACER ORIENTATION - BE SURE THAT THE INDENT IN THE SPACER COVERS THE PLUSNUT HEAD; THIS ENSURES THE MOST METAL-TO-METAL CONTACT AND REDUCES VIBRATION.

PLUSNUT INSTALLATION - A PLUSNUT GUN IS RECOMMENDED FOR PLUSNUT INSTALLATION FOR ITS PRODUCTION SPEED. HOWEVER, A PLUSNUT SETTING TOOL CAN ALSO BE USED (P/N: 22200-0).

THRU-BOLT CLEARANCE - WHEN USING A THRU-BOLT AT ANY MOUNTING LOCATION, BE SURE THAT YOUR HOLE HAS 1/16" CLEARANCE.

SHELF & END CAP KIT PRODUCT STRUCTURES

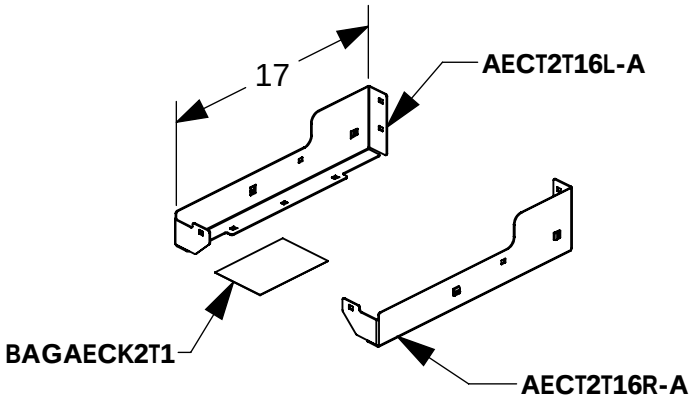

AECKT2T16A1

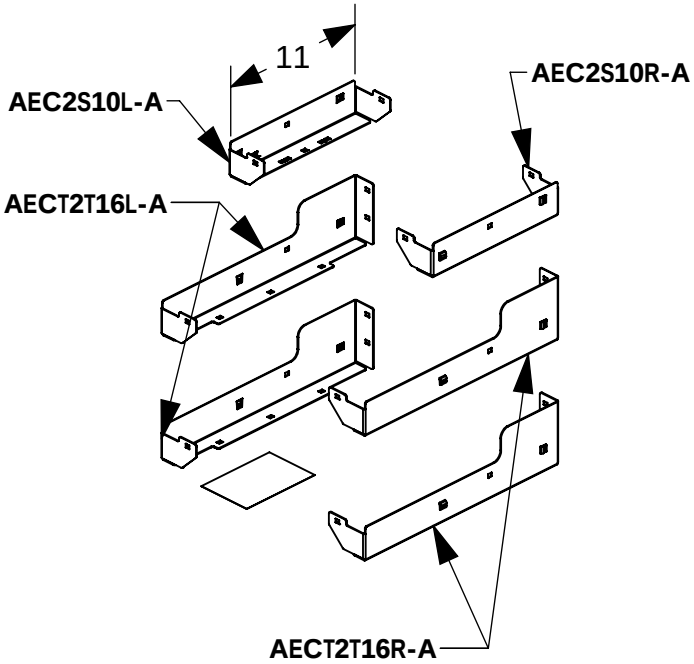

AECKT2T16A3

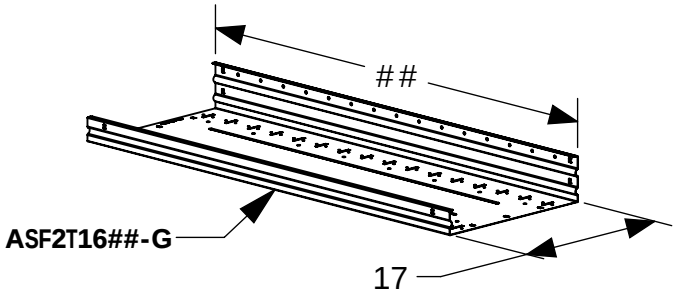

ASFK2T16##G1

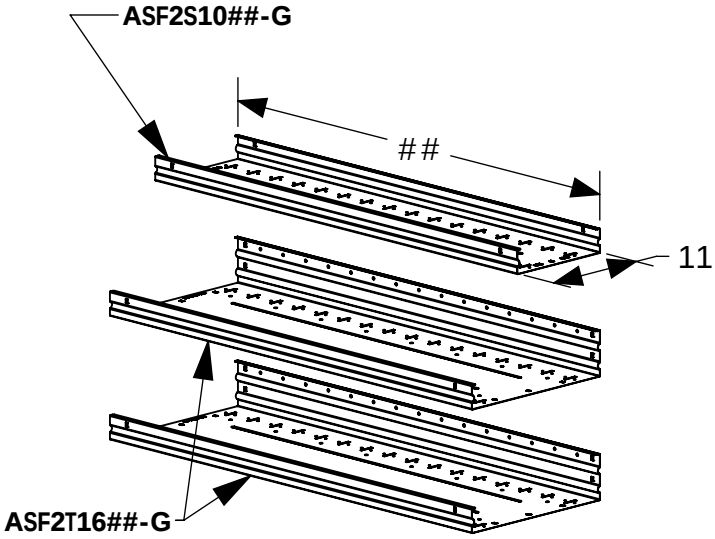

ASFKT2T16##G1

END PANEL KIT PRODUCT STRUCTURES

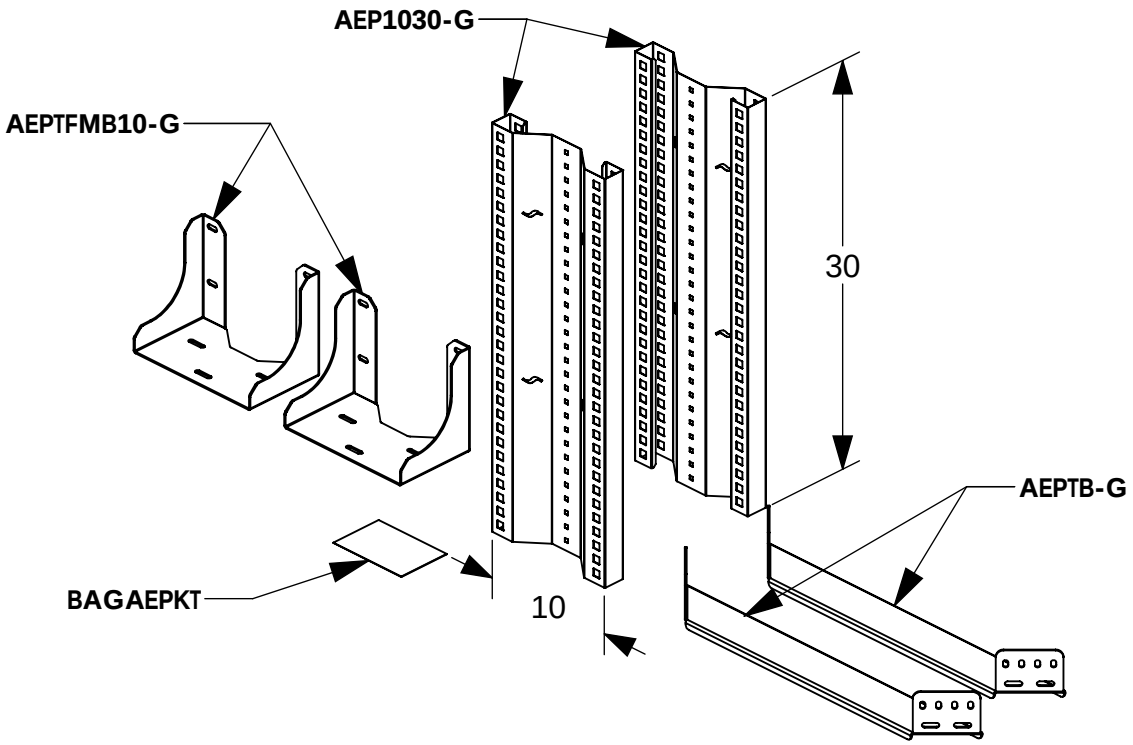

AEPKT1030G

BEST PRACTICE: ORGANIZE ALL FASTENERS & VERIFY THAT ALL ARE ACCOUNTED FOR

FASTENERS USED

BAG REFERENCE: **BAGAEPKT**

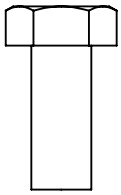

FAS0081
HEX HEAD BOLT
5/16-18 X .75 LG
QTY: 10

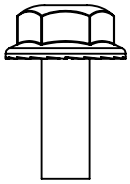

FAS0018
SCREW, HFLNG
1/4-20 X .62
QTY: 12

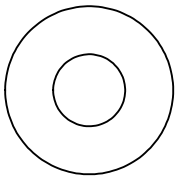

FAS0086
FLAT WASHER
5/16
QTY: 10

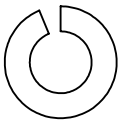

FAS0098
SPLIT LOCK WASHER
5/16
QTY: 10

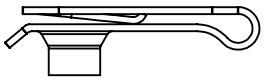

FAS0994
U-NUT
1/4-20
QTY: 12

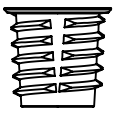

FAS0921
THREADED INSERT
5/16-18
QTY: 10

INTENTIONALLY LEFT BLANK

FASTENERS USED

BAG REFERENCE: **BAGAECK2T3 & BAGAECK2T1**

BAGAECK2T3

THIS BAG IS FOR STANDARD 3 SHELF END CAP KITS

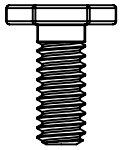

FAS0924
FLAT HEAD CRG BOLT
1/4-20 X .63 LG
QTY: 28

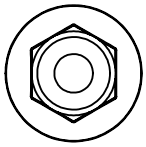

FAS0055
NYLOK FLANGE NUT
1/4-20 HEX
QTY: 28

BAGAECK2T1

THIS BAG IS FOR STANDARD SINGLE SHELF END CAP KITS

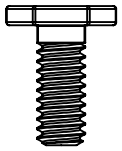

FAS0924
FLAT HEAD CRG BOLT
1/4-20 X .63 LG
QTY: 10

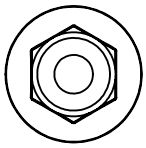

FAS0055
NYLOK FLANGE NUT
1/4-20 HEX
QTY: 10

INTENTIONALLY LEFT BLANK

STEP 1 - INSERT SNAP-IN NUTS INTO END PANEL AND ATTACH FLOOR MOUNTING BRACKET TO END PANEL

Step 1.1

INSTALL IN END PANEL
FAS0994
(06 PLACES)

REPEAT FOR OTHER END PANEL

TOP FASTENERS NEED TO BE MIRRORED FOR OTHER SIDE

LEFT END PANEL

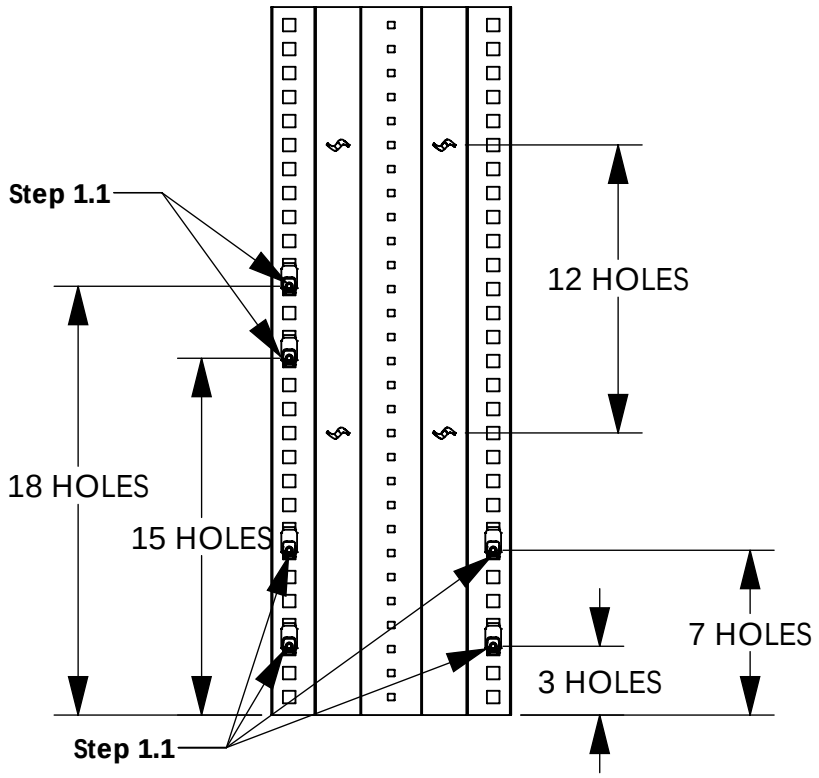

Step 1.2

FULLY TIGHTEN
FAS0018
(04 PLACES)
7/16" SOCKET

REPEAT FOR OTHER END PANEL

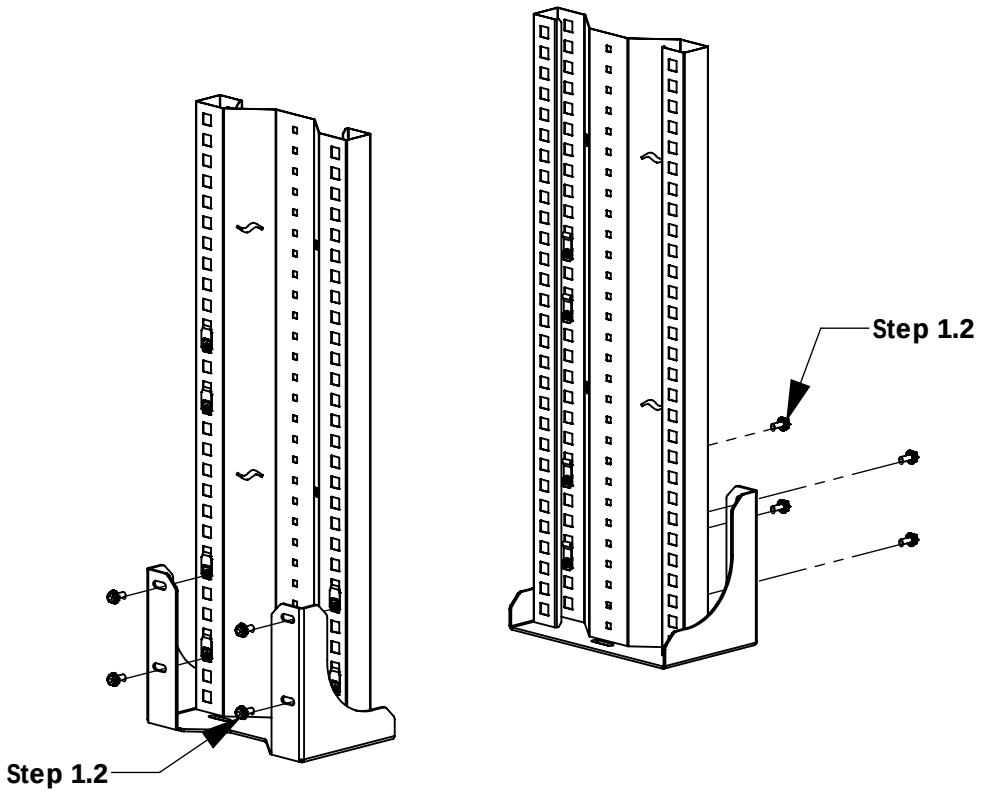

STEP 2 - ATTACH END CAPS TO END PANEL

Step 2.1

SNAP END CAPS ONTO END PANELS

INSERT REAR TAB IN REAR SQAURE HOLE

THEN ALIGN FRONT TAB WITH CORRESPONDING HOLE ON THE FRONT

PUSH FRONT OF END CAP DOWN UNTIL IT SNAPS INTO PLACE

STANDARD TRUCK SHELF HEIGHTS

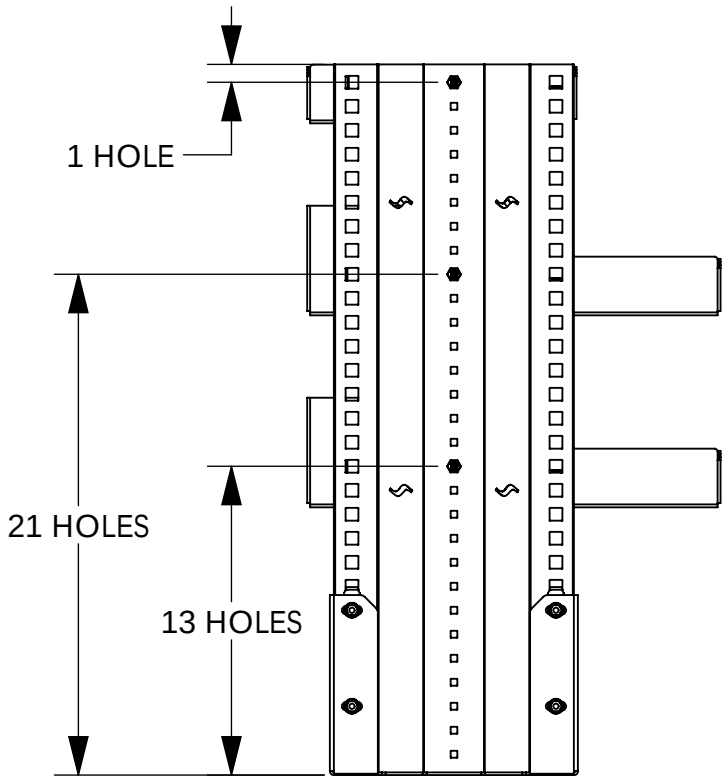

Step 2.2

FULLY TIGHTEN
FAS0924 & FAS0055
(06 PLACES)
7/16" SOCKET

CARRIAGE BOLT SHOULD BE ON OUTSIDE OF END PANEL

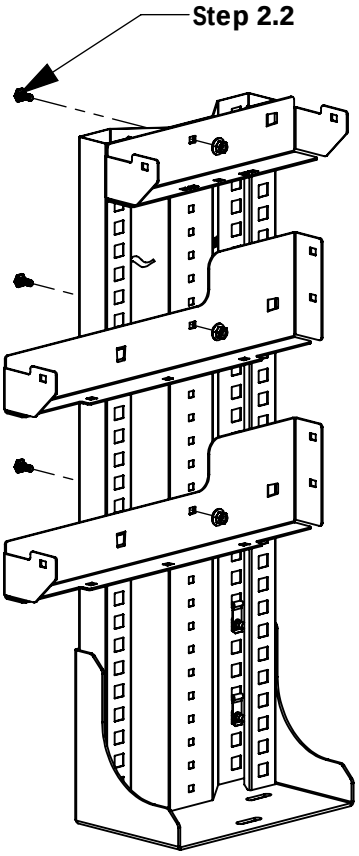

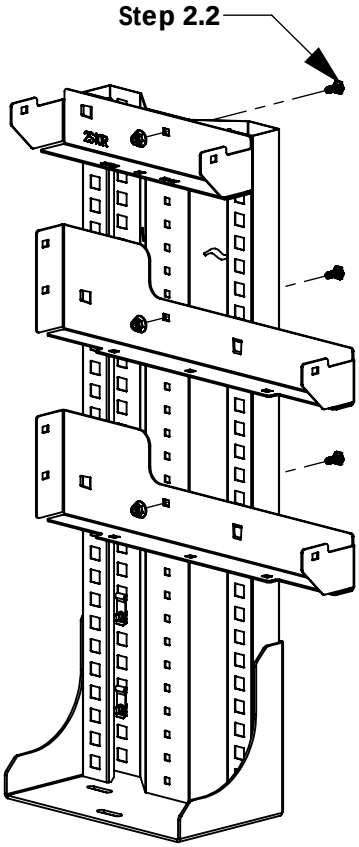

STEP 3 - ATTACH SHELVES TO END CAPS

Step 3.1

FULLY TIGHTEN
FAS0924 & FAS0055
(04 PLACES)
7/16" SOCKET

REPEAT FOR MIDDLE SHELF

CARRIAGE BOLT SHOULD BE ON OUTSIDE OF THE SHELF

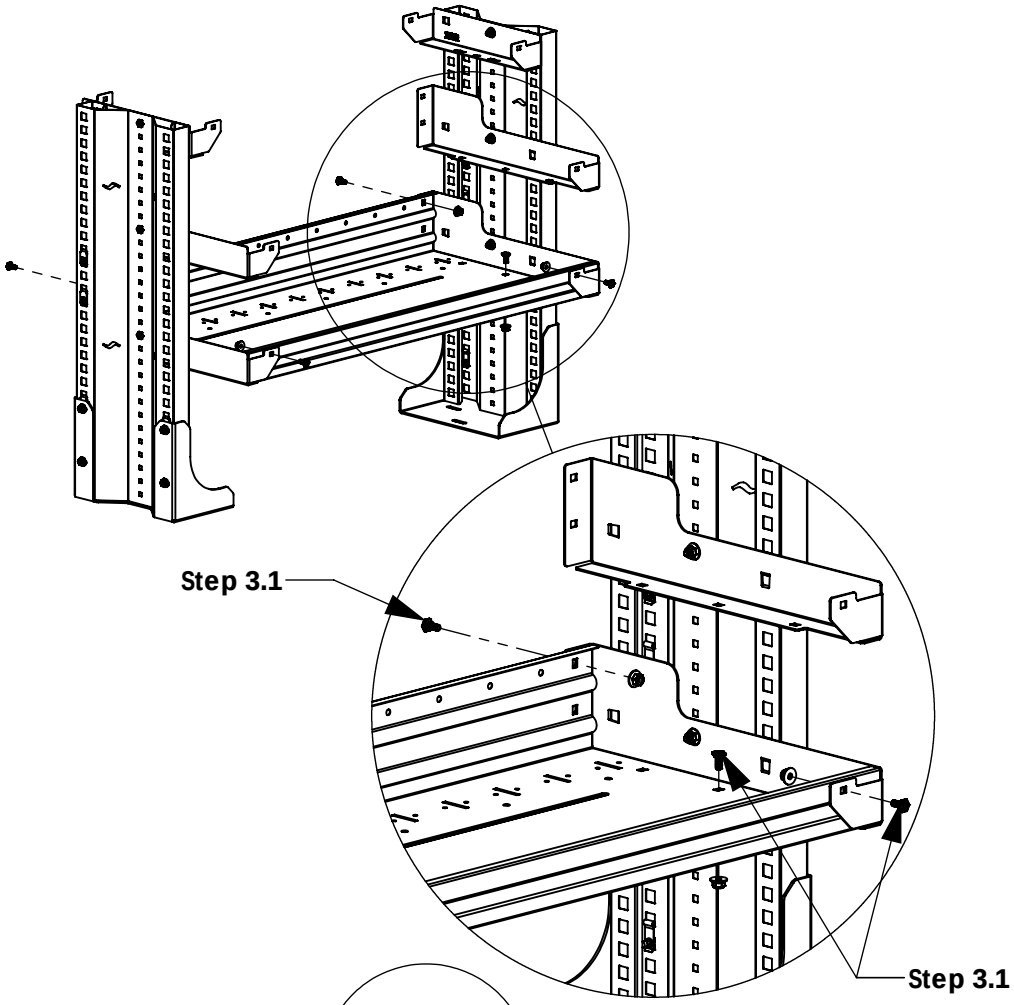

Step 3.2

FULLY TIGHTEN
FAS0924 & FAS0055
(06 PLACES)
7/16" SOCKET

CARRIAGE BOLT SHOULD BE ON OUTSIDE OF END PANEL

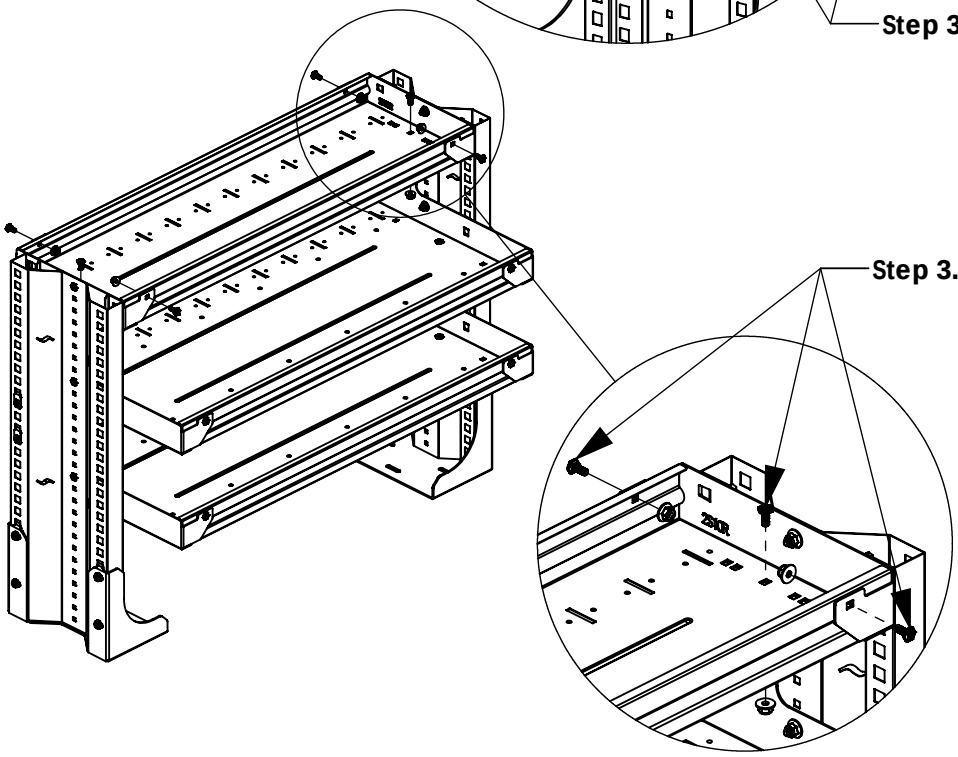

STEP 4 - ATTACH TRUCK BRACE TO END PANELS

Step 4.1

UTILIZE U-NUTS FROM STEP 1.1

<u>FULLY TIGHTEN</u>
FAS0018
(04 PLACES)
7/16" SOCKET

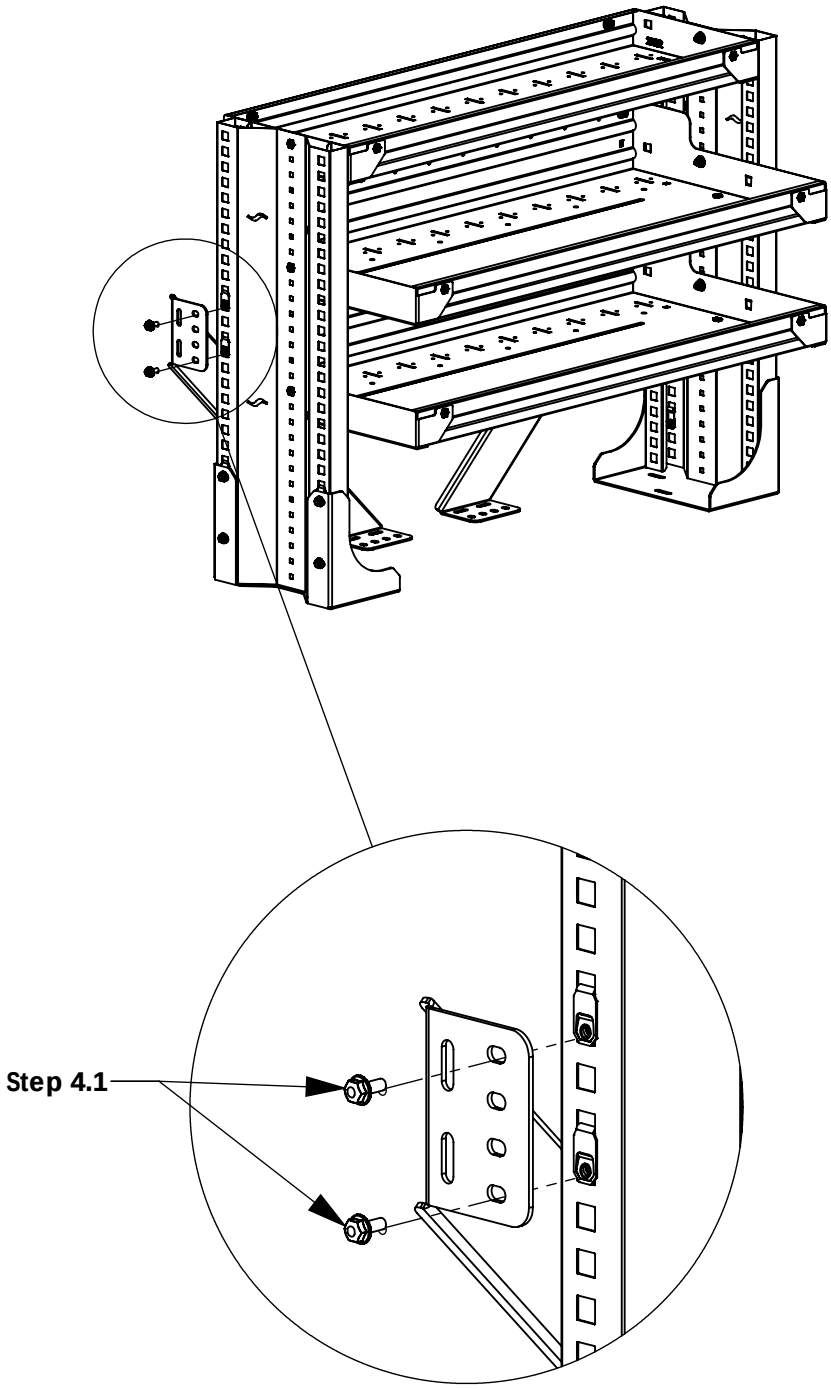

STEP 5 - MOUNT SHELVING UNIT TO EXTENDOBED

Step 5.1

PLACE ASSEMBLED SHELVING UNIT ON EXTENDOBED IN DESIRED POSITION

MARK HOLES (10 PLACES)

Step 5.2

MOVE SHELVING UNIT

DRILL MARKED HOLES 7/16" DRILL BIT (10 PLACES)

Step 5.3

INSERT THREADED INSERTS INTO DRILLED HOLES

FULLY TIGHTEN FAS0921 (10 PLACES) 8mm ALLEN BIT

Step 5.4

PLACE SHELVING BACK IN POSITION

FULLY TIGHTEN FAS0086, FAS0098, & FAS0081 (10 PLACES) 1/2" SOCKET

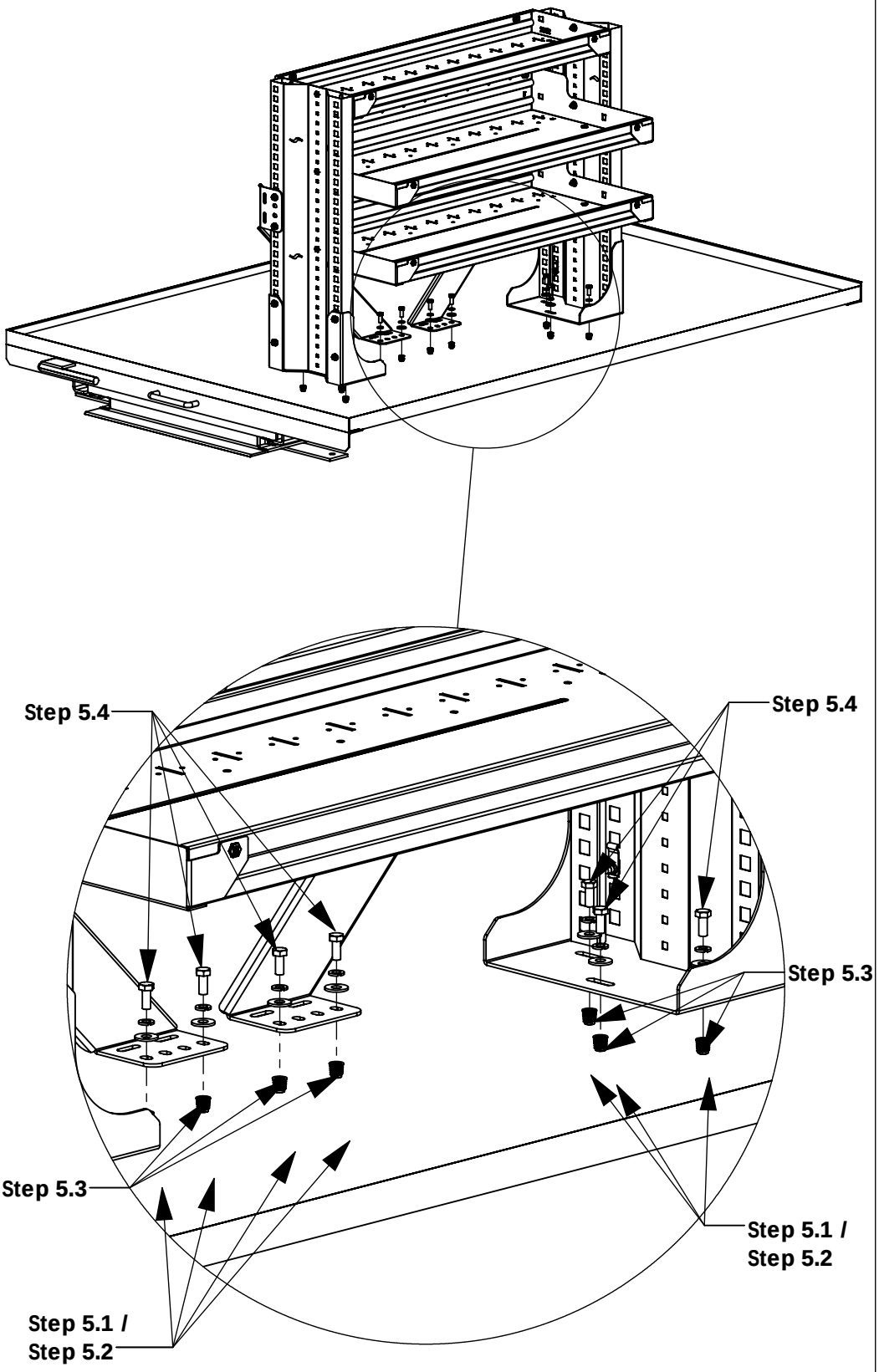
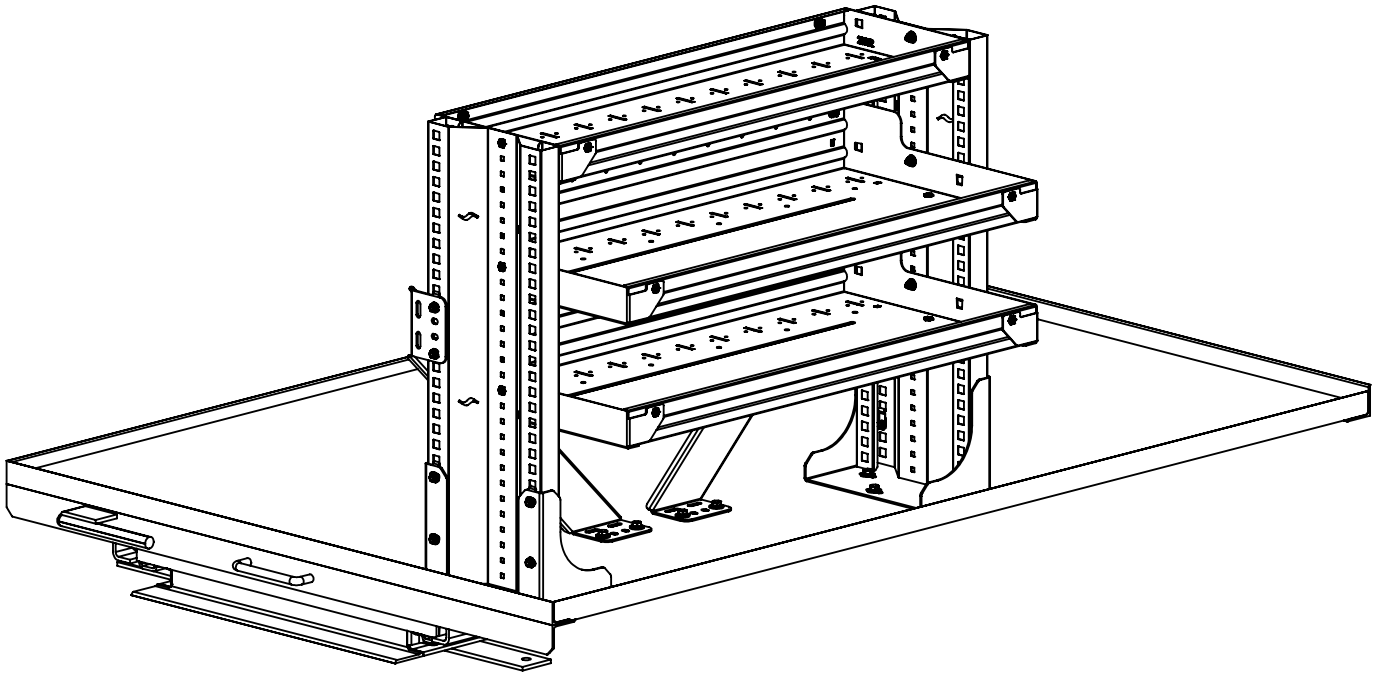
INSTALLATION COMPLETE!!