ADRIAN STEEL
Cargo Management Solutions for Commercial Vehicles

END CAP KIT,2T,R,18D,CNTR SUP, 1

PRODUCT WEIGHT

5.40 LBS

WIDTH X DEPTH X HEIGHT

18" D X 4.57" H

CAPACITY

N/A

COLOR

ASC BLUE

CATALOG NUMBER

ASCSKR18A1

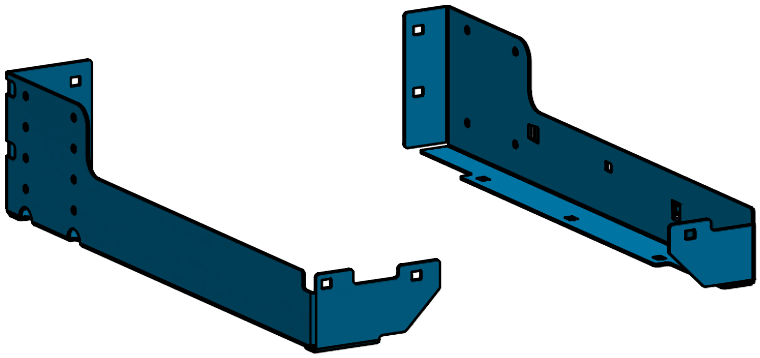

PRODUCT FEATURES

This kit contains end caps that connect the center support and end panels to shelving. The end caps mount align with the square cut-outs on the center cupport vertical posts and are secured using a single set of fasteners. The end caps can be mounted to the center support at any height as long as the vehicle body allows.

SEE PAGE 2 FOR APPLICATION NOTES, ACCESSORIES AND OTHER PRODUCTS THAT WORK WITH THIS UNIT.

END CAP KIT,2T,R,18D,CNTR SUP, 1

CATALOG NUMBER **ASCSKR18A1**

PRODUCT APPLICATION

This kit contains 1 sets of end caps, to work with any center support vertical posts, end panels and shelving to replace the lower support bracket . However, this kit is compatible with any height of end panel.

ACCESSORIES THAT WILL WORK WITH THIS PRODUCT

CATALOG NUMBER	*DESCRIPTION (smart)*
AEPK1049	END PANEL KIT, 10X49, G
AEPK1063	END PANEL KIT, 10X63, G
AEPK1068	END PANEL KIT, 10X68, G
AEPK1068-PM	END PANEL KIT, 10X68, PM, G
ASFK2T1424G3	SHELF KIT, 2T, 14X24, G, 3
ASFK2T1430G3	SHELF KIT, 2T, 14X30, G, 3
ASFK2T1436G3	SHELF KIT, 2T, 14X36, G, 3
ASFK2T1442G3	SHELF KIT, 2T, 14X42, G, 3
ASFK2T1448G3	SHELF KIT, 2T, 14X48, G, 3
ASFK2T1454G3	SHELF KIT, 2T, 14X54, G, 3
ASFK2T1460G3	SHELF KIT, 2T, 14X60, G, 3
ASFK2T1466G3	SHELF KIT, 2T, 14X66, G, 3
ASFK2T1472G3	SHELF KIT, 2T, 14X72, G, 3
ACSK1449A3	CNTR SUPPRT KIT,14X49,A,3
ACSK1463A4	CNTR SUPPRT KIT,14X63,A,4
ACSK1468A5	CNTR SUPPRT KIT,14X68,A,5

The information contained in this document is the sole property of ADRIAN STEEL COMPANY. ADRIAN STEEL COMPANY retains the right to modify and/or change the product of its design at any time with prior notification.

INSTR. NUMBER : INS-ASCSK	PG: 1	REV: A
PART NUMBER : ASCSK#####		
PART DESC. • END CAP KIT,2T,##D,CNTR SUP,#		

ITEM NO.	PART NUMBER	DESCRIPTION	QTY.
1	AECCS2T14L-A	END CAP,2T,14D,LEFT, CNTR SUPP,ASC BLUE	1
2	AECCS2T14R-A	END CAP,2T,14D,RIGHT, CNTR SUPP, ASC BLUE	1

NOTE: THIS INSTRUCTION IS VALID FOR THE FOLLOWING KITS:

- **ASCSK14A1**
- **ASCSK14A2**
- **ASCSK16A1**
- **ASCSK16A2**
- **ASCSK18A1**
- **ASCSK18A2**
- **ASCSKL14A1**
- **ASCSKR14A1**
- **ASCSKL16A1**
- **ASCSKR16A1**
- **ASCSKL18A1**
- **ASCSKR18A1**

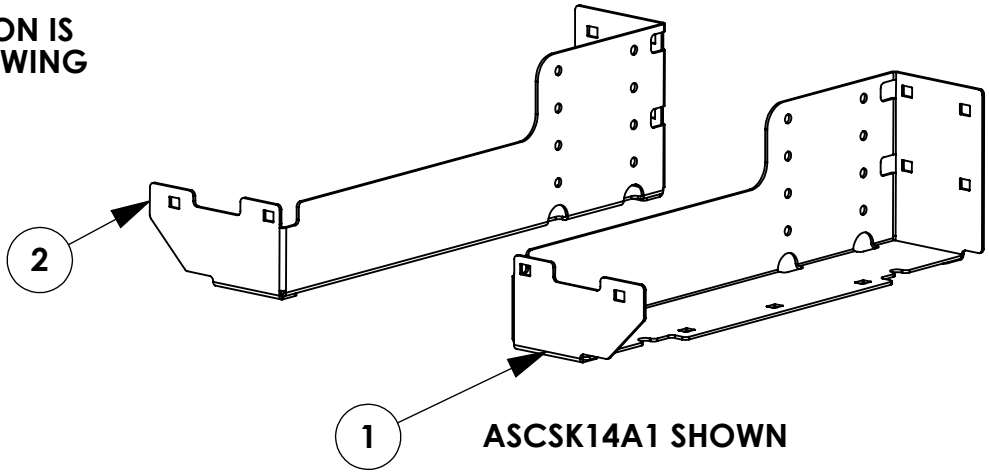

ASCSK14A1 SHOWN

ITEM NO.	PART NUMBER	DESCRIPTION	QTY.
1	AEC2T14L-A	END CAP,2T,14D,LEFT,A	1
2	AECCS2T14R-A	END CAP,2T,14D,RIGHT, CNTR SUPP, ASC BLUE	1
3	BAGASCSKA1	BAG FOR ASCSKA1	1

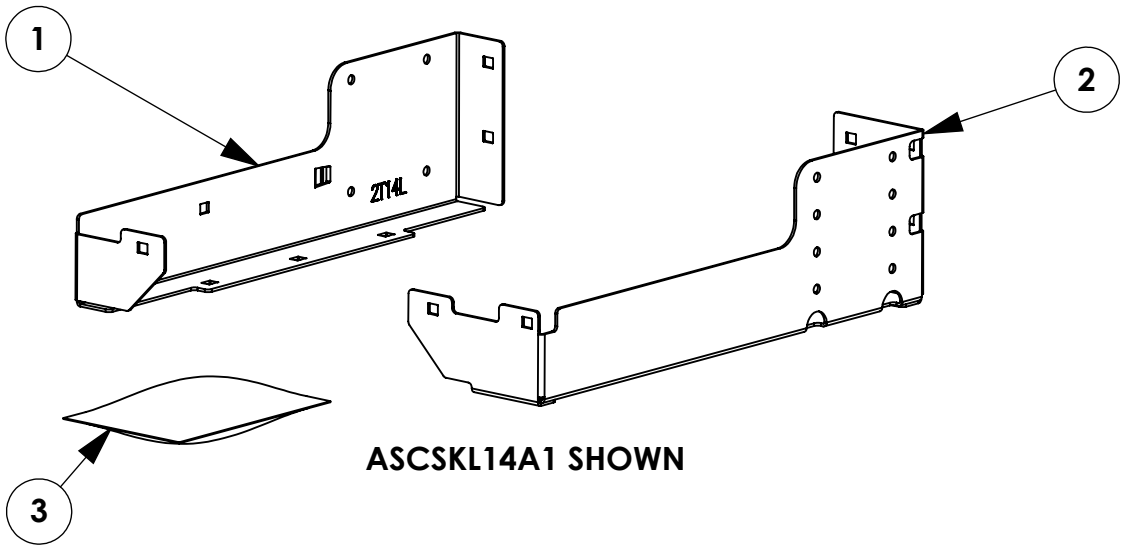

ASCSKL14A1 SHOWN

NOTE: THIS INSTRUCTION IS TO BE USED IN CONJUNCTION WITH INS-ASHELVING.

TOOLS NEEDED:

- **1/2 WRENCH**
- **7/16 SOCKET**

BEST PRACTICES

GET TO KNOW THE VEHICLE - AT THE BEGINNING OF ANY INSTALLATION, CHECK THE LOCATION OF THE FUEL TANK, FUEL LINES, BRAKE LINES, HIGH VOLTAGE BATTERIES AND WIRING HARNESSES TO AVOID INJURY OR PROPERTY DAMAGE FROM TOOL CONTACT.

SEAL ALL EXTERIOR HOLES - ALL INSTALLATION HOLES SHOULD BE SEALED WITH BUTYL TAPE OR SILICON TO PREVENT WATER AND EXHAUST GASES FROM ENTERING THE VEHICLE.

CONTROL DRILL DEPTH - TO AVOID DAMAGE TO THE VEHICLE, USE A DRILL STOP OR CLEARED STEP BIT WHEN DRILLING INSTALLATION HOLES.

ALWAYS ADD PRIMER - WHEN ADDING INSTALLATION HOLES BE SURE TO USE A SELF-ETCHING PRIMER TO PREVENT CORROSION, FASTENER FAILURE AND INJURY.

MOUNTING POINTS MUST HAVE METAL-TO-METAL CONTACT - USE PROVIDED MOUNTING SPACERS TO ACCOMMODATE FOR VEHICLE FEATURES, CARPET OR SUBFLOORS.

PROVIDE CLEARANCE FOR SPACERS - IF THE INSTALLATION VEHICLE CONTAINS A CARPET OR SUBFLOOR, USE A 1-3/16" DIAMETER CARPET CUTTER (P/N: 31183-0) AT ALL MOUNTING LOCATIONS TO OPEN UP ROOM FOR SPACERS.

CHECK SPACER ORIENTATION - BE SURE THAT THE INDENT IN THE SPACER COVERS THE PLUSNUT HEAD; THIS ENSURES THE MOST METAL-TO-METAL CONTACT AND REDUCES VIBRATION.

PLUSNUT INSTALLATION - A PLUSNUT GUN IS RECOMMENDED FOR PLUSNUT INSTALLATION FOR ITS PRODUCTION SPEED. HOWEVER, A PLUSNUT SETTING TOOL CAN ALSO BE USED (P/N: 22200-0).

THRU-BOLT CLEARANCE - WHEN USING A THRU-BOLT AT ANY MOUNTING LOCATION, BE SURE THAT YOUR HOLE HAS 1/16" CLEARANCE.

FASTENERS USED

BAG REFERENCE: **BAGASCSKA1**

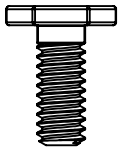

FAS0924
FLAT HEAD CRG BOLT
1/4-20 X .63 LG
QTY:12

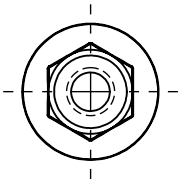

FAS0055
NUT,HEX NLK
FLG 1/4-20 ZP
QTY:12

NOTE: THIS BAG IS ONLY USED FOR THE FOLLOWING END CAP CENTER SUPPORT KITS

- **ASCSKL14A1**
- **ASCSKR14A1**
- **ASCSKL16A1**
- **ASCSKR16A1**
- **ASCSKL18A1**
- **ASCSKR18A1**

NOTE: EXAMPLE ON NEXT PAGE

INTENTIONALLY LEFT BLANK

STEP 1 - ASSEMBLE CENTER SUPPORT END CAP KIT
(NOTE: TO BE USED WITH KITS ASCSK14A1, ASCSK14A2, ASCSK16A1, ASCSK16A2, ASCSK18A1, ASCSK18A2 ONLY.)

Step 1.1
REPLACE THE CURRENT CENTER LOWER SUPPORT BKT. WITH AECCS2T##L-A & AECCS2T##R-A USING EXISTING HARDWARE FROM CENTER SUPPORT KIT. FAS0924 AND FAS0055 (14 PLACES) 1/2 WRENCH 7/16 SOCKET

Step 1.2
<u>FULLY TIGHTEN</u> FAS0924 AND FAS0055 (14 PLACES) 1/2 WRENCH 7/16 SOCKET

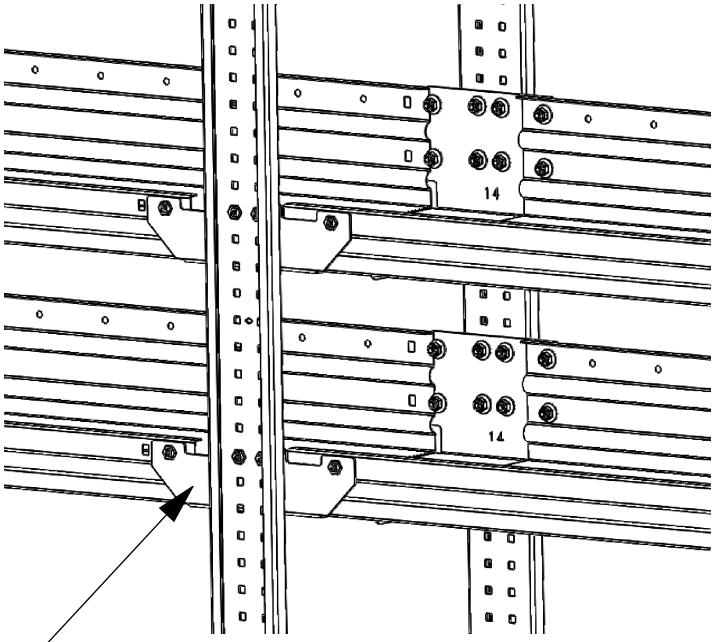

STEP 1.1 REPLACE CURRENT CENTER SUPPORT SHOWN FOR REFERENCE ONLY.

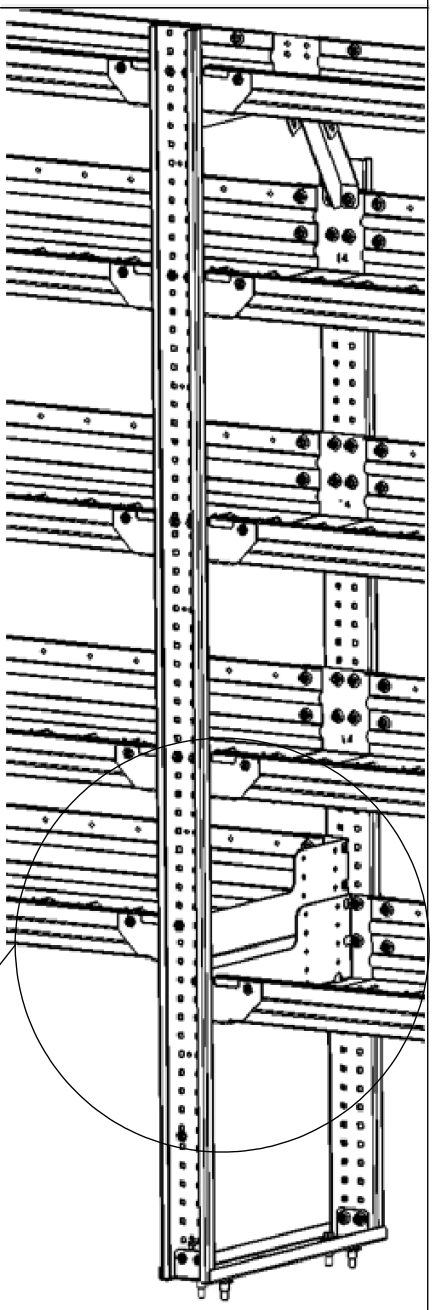

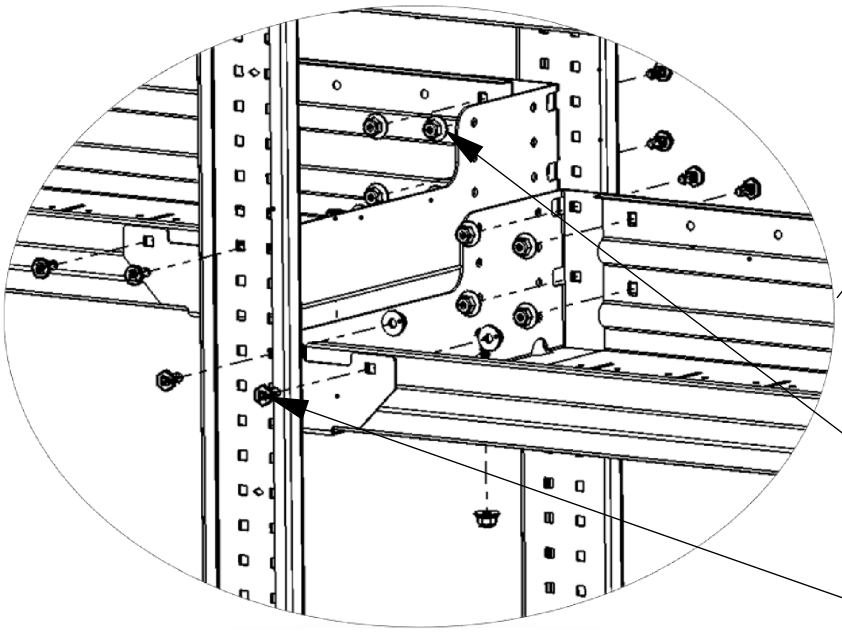

Step 1.2

INSTALLATION IS COMPLETE FOR KITS LISTED ABOVE

NOTE: THESE CENTER SUPPORT END CAP ALLOW FOR DIFFERENT HEIGHT OF SHELVES AT THE CENTER SUPPORT AS SHOWN.

STEP 2 - ASSEMBLE EXTRA SHELF WITH CENTER SUPPORT END CAP KIT
(NOTE: TO BE USED WITH KITS ASCSKL14A1, ASCSKR14A1, ASCSKL16A1, ASCSKR16A1, ASCSKL18A1, ASCSKR18A1 ONLY.)

Step 2.1
LOOSELYASSEMBLE BOTH AEC2T###-A & AECCS2T###-A TO SHELF ASSEMBLY USING FAS0924 AND FAS0055 (12 PLACES) 1/2 WRENCH 7/16 SOCKET

Step 2.2
<u>FULLY TIGHTEN</u> FAS0924 AND FAS0055 (12 PLACES) 1/2 WRENCH 7/16 SOCKET

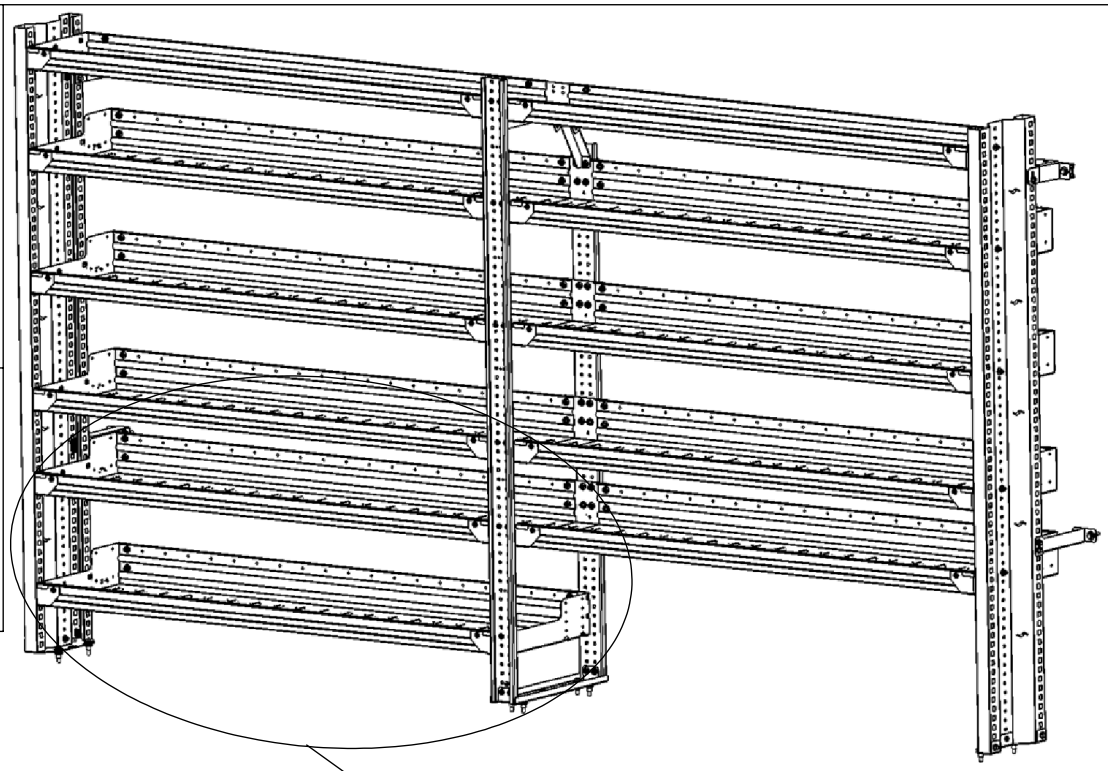

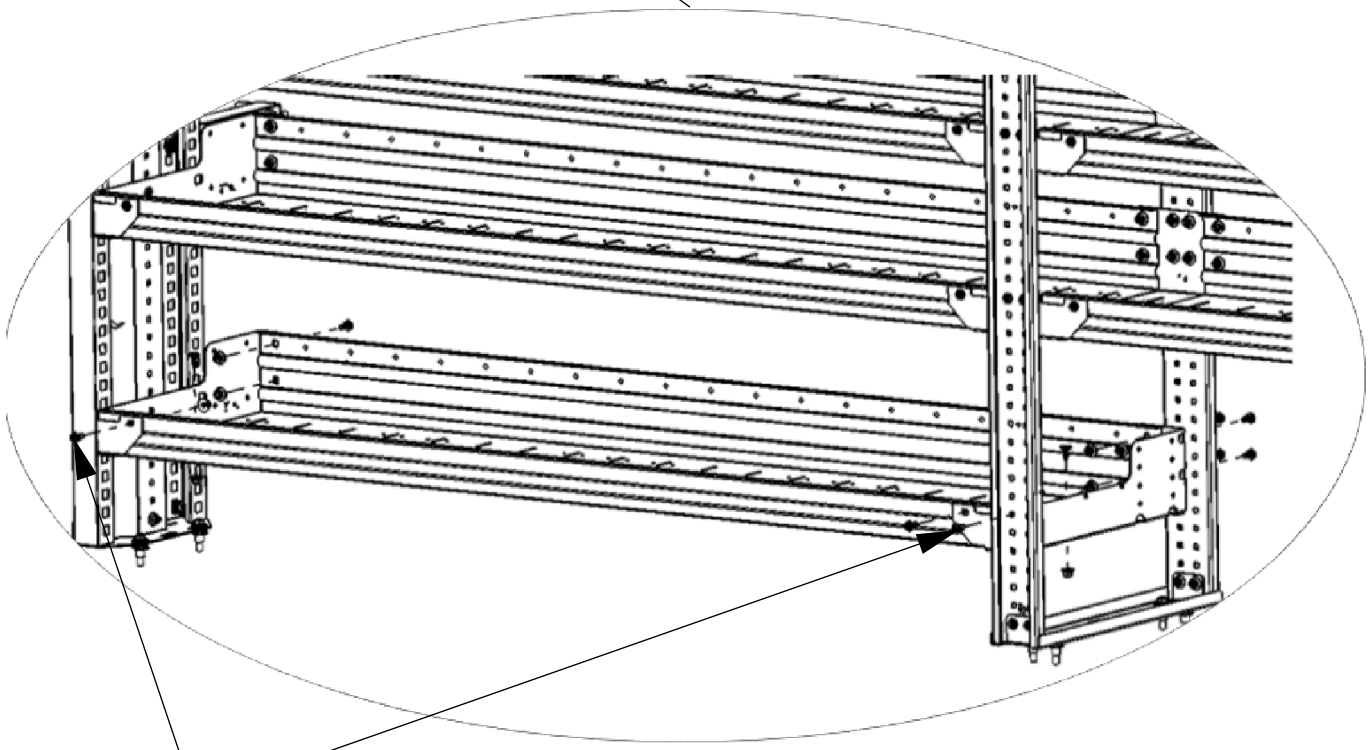

Step 2.2

INSTALLATION IS COMPLETE FOR KITS LISTED ABOVE

NOTE: THESE CENTER SUPPORT END CAP KITS ALLOW AN ADDITIONAL STAND ALONE SHELF AT DIFFERENT HEIGHT AT THE CENTER SUPPORT AS SHOWN.