CH TOWER, ADD ON, SHELF

PRODUCT WEIGHT

9.66 LBS

WIDTH X DEPTH X HEIGHT

24.27" X 17.18" X 2.00"

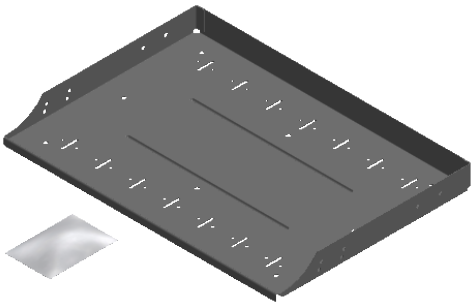

CAPACITY

50 LBS PER SHELF MAX
200 LBS PER "TOWER"

COLOR

GRAY

CATALOG NUMBER

AS-CHS1

PRODUCT FEATURES

FOR STORING TOOL CASES LIKE THE MILWAUKEE PACKOUT, HILTI, DEWALT AND MORE

DESIGNED WITH A LOW FRONT LIP FOR EASY HANDLE ACCESS

USES NGS END PANELS AND MOUNTING BRACKETS

SHELVES ARE TO BE MOUNTED ON AN ANGLE WHEN USED FOR STORING CASES

SHELVES CAN BE MOUNTED FLAT, CAN BE MOUNTED 2" INBOARD ALSO.

SHELVES HAVE HOLE PATTERN TO ACCEPT 16" NG DIVIDERS AND BINS

HAS HOLE PATTERN FOR MOUNTING A MILWAUKEE PACKOUT PLATE, CAN BE USED IF SHELF IS MOUNTED UPSIDE DOWN

SEE PAGE 2 FOR APPLICATION NOTES, ACCESSORIES AND OTHER PRODUCTS THAT WORK WITH THIS UNIT.

CH TOWER, ADD ON, SHELF

CATALOG NUMBER **AS-CHS1**

PRODUCT APPLICATION

FOR STORING TOOL CASES LIKE THE MILWAUKEE PACKOUT, HILTI, DEWALT, KLEIN, KOBALT, FLEX, RIGID, CRAFTSMAN, BOSCH, MAKITA, RYOBI, HUSKY AND MORE

ACCESSORIES THAT WILL WORK WITH THIS PRODUCT

WORKS WITH NEXT GEN SHELVING

CATALOG NUMBER	*DESCRIPTION (smart)*
BIN616	BIN, 6W X 16D
BIN1216	BIN, 12W X 16D
DIVK161	SHELF DIVIDER KIT, 16D, 1
DIVK164	SHELF DIVIDER KIT, 16D, 4

The information contained in this document is the sole property of ADRIAN STEEL COMPANY. ADRIAN STEEL COMPANY retains the right to modify and/or change the product of its design at any time with prior notification.

THIS DOCUMENT LISTS THE PRODUCT STRUCTURE OF THE VARIOUS MODULAR KITS TO ASSEMBLE YOUR SHELVING UNIT OF THE

ADRIAN SHELVING PRODUCT LINE

TO VIEW INSTRUCTIONS OF HOW TO ASSEMBLE YOUR SHELVING UNIT, PLEASE REFER TO PART#: INS-ASHELVING

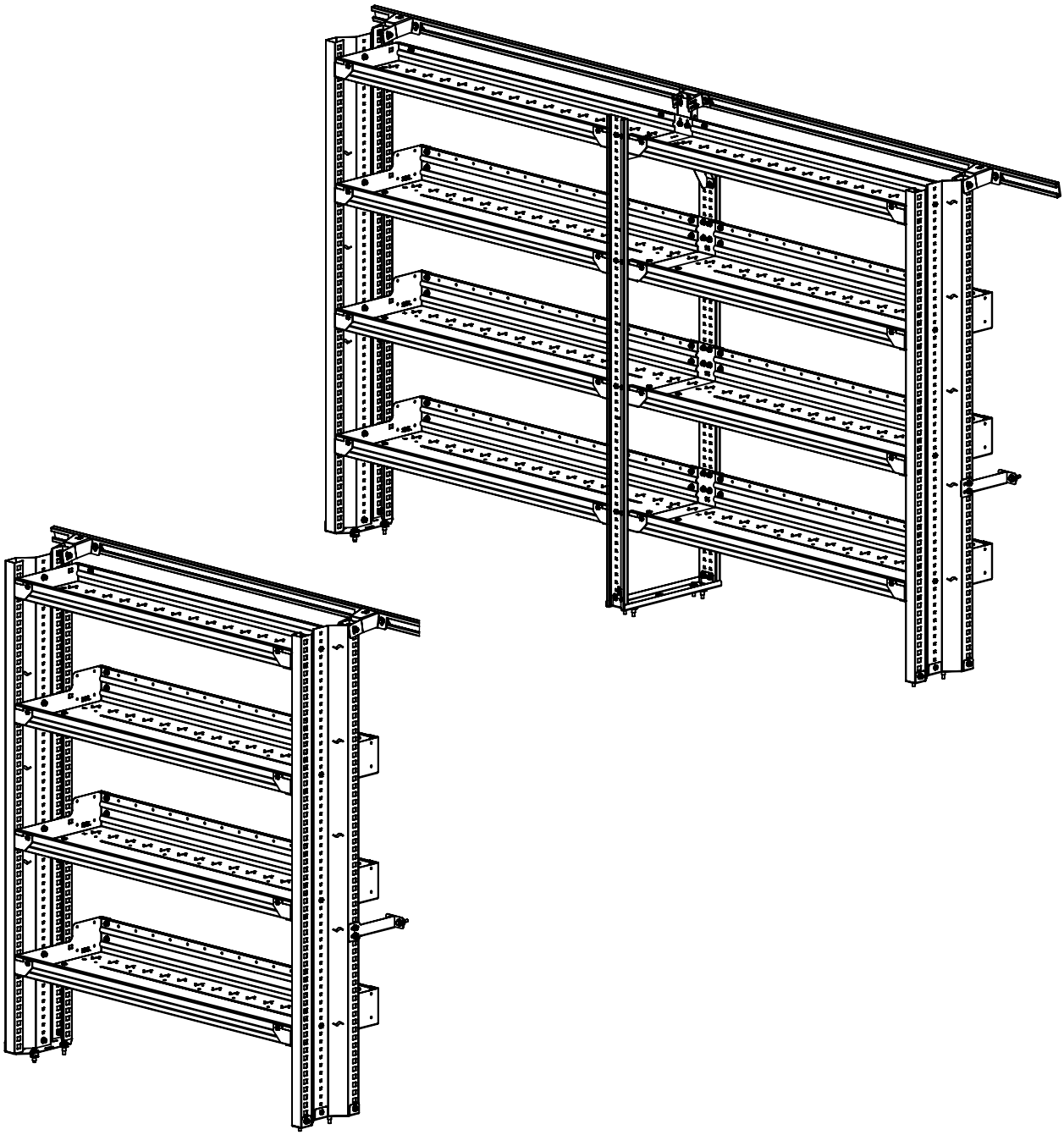

END PANEL KIT PRODUCT STRUCTURES

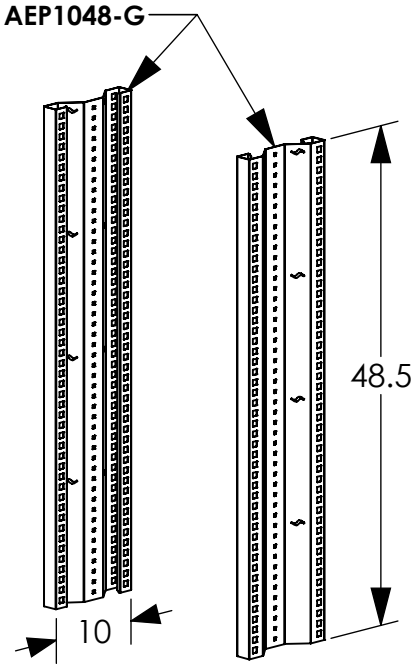

AEPK1048G

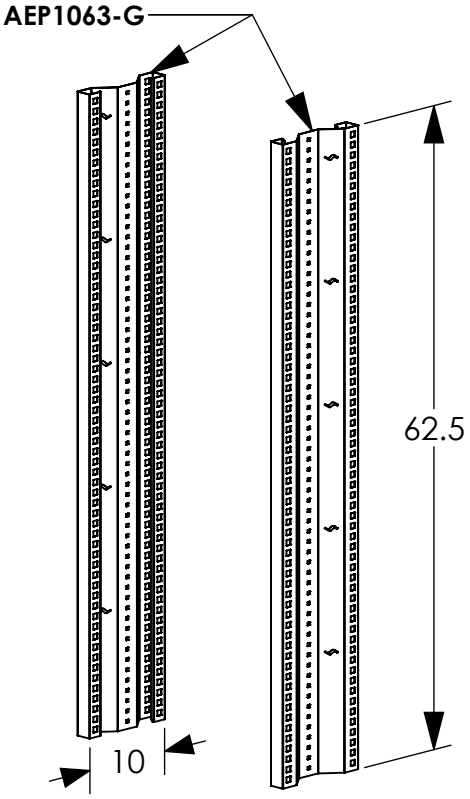

AEPK1063G

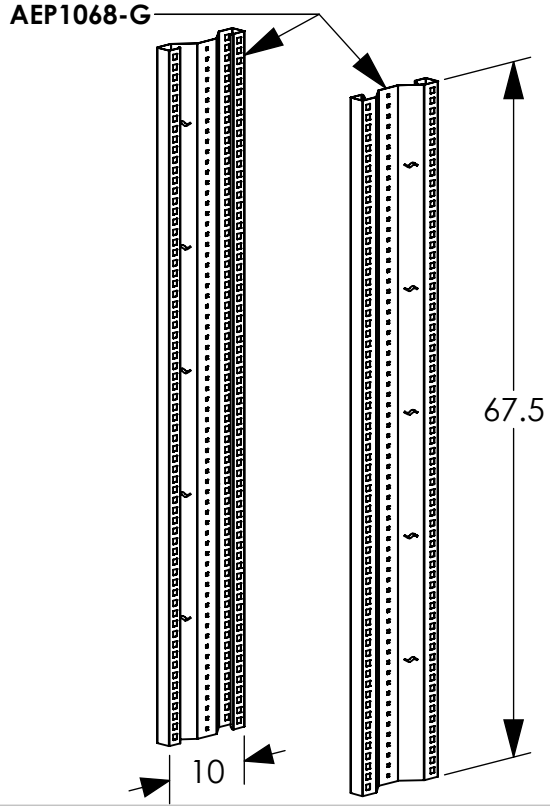

AEPK1068G

14 INCH END CAP KIT PRODUCT STRUCTURES

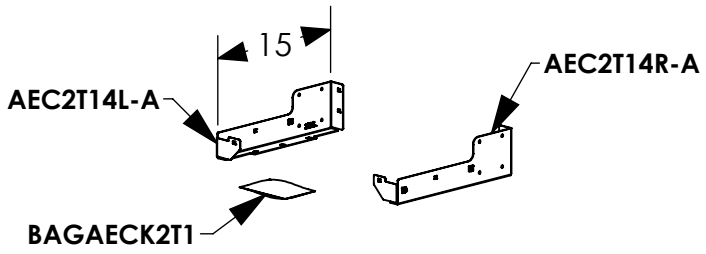

AECK2T14A1

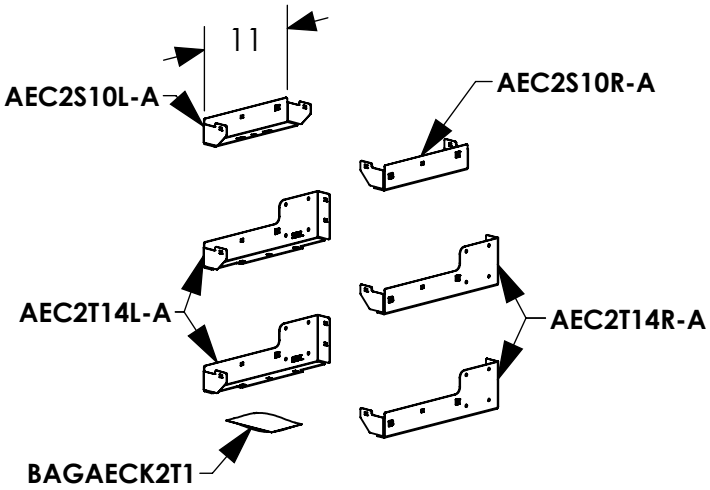

AECK2T14A3

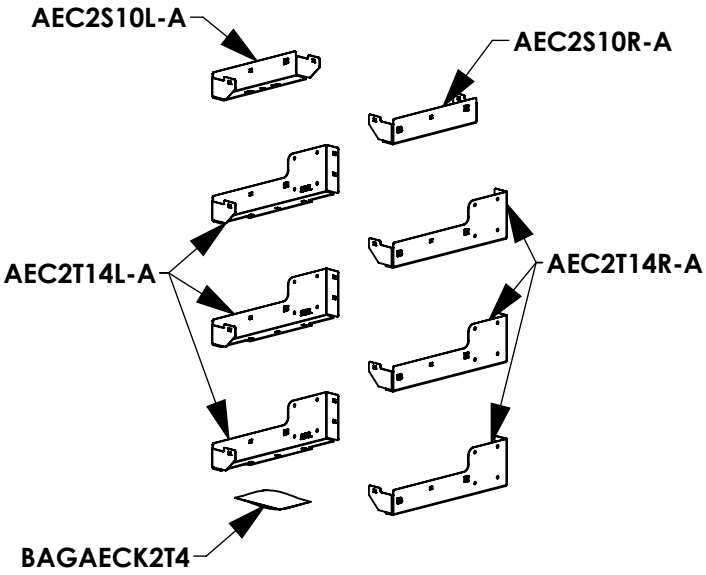

AECK2T14A4

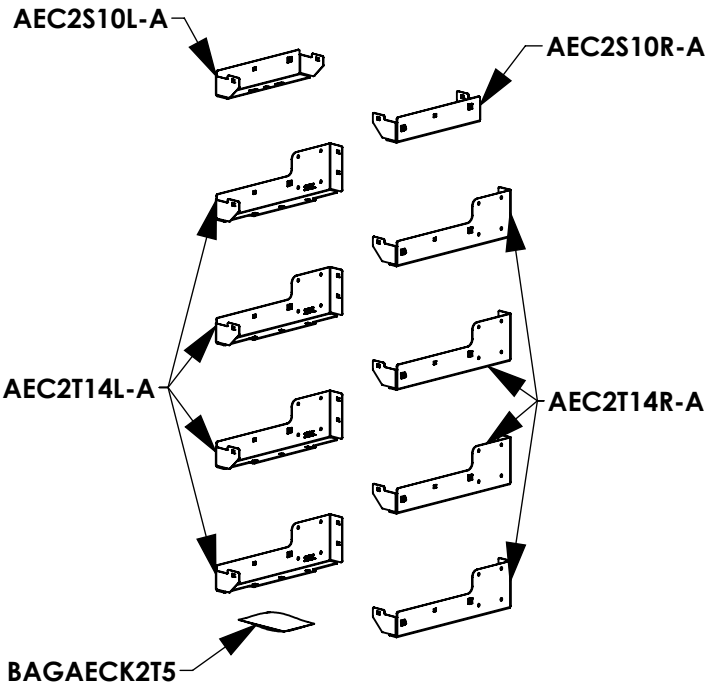

AECK2T14A5

16 INCH END CAP KIT PRODUCT STRUCTURES

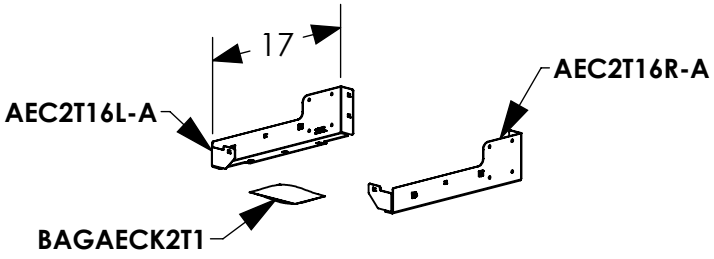

AECK2T16A1

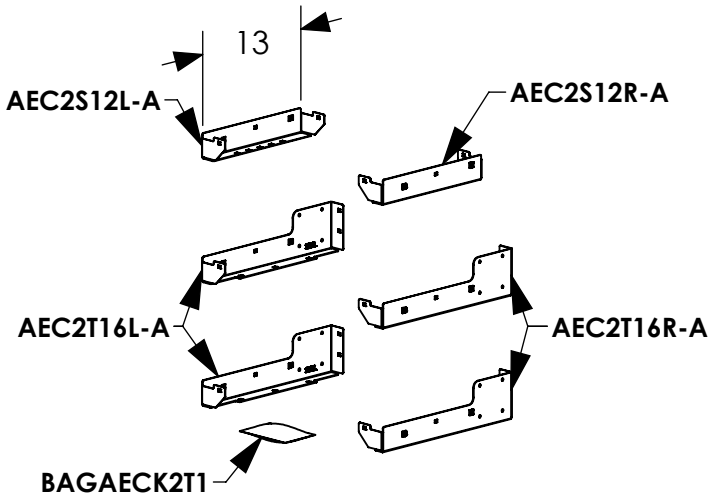

AECK2T16A3

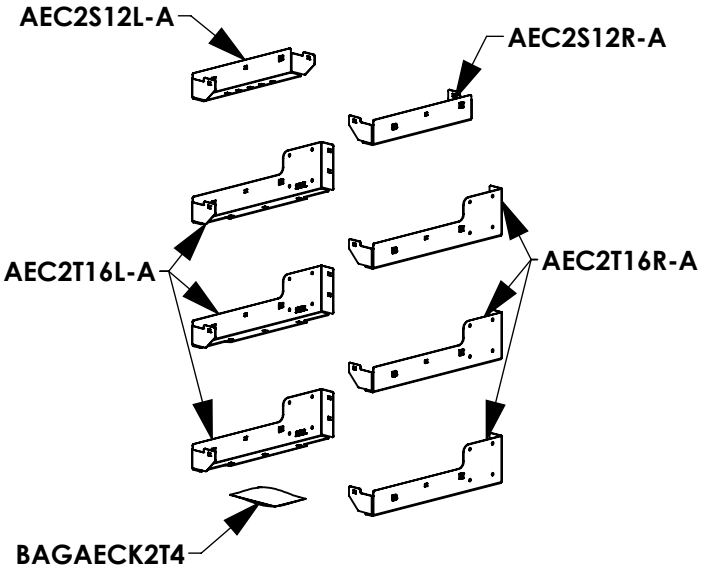

AECK2T16A4

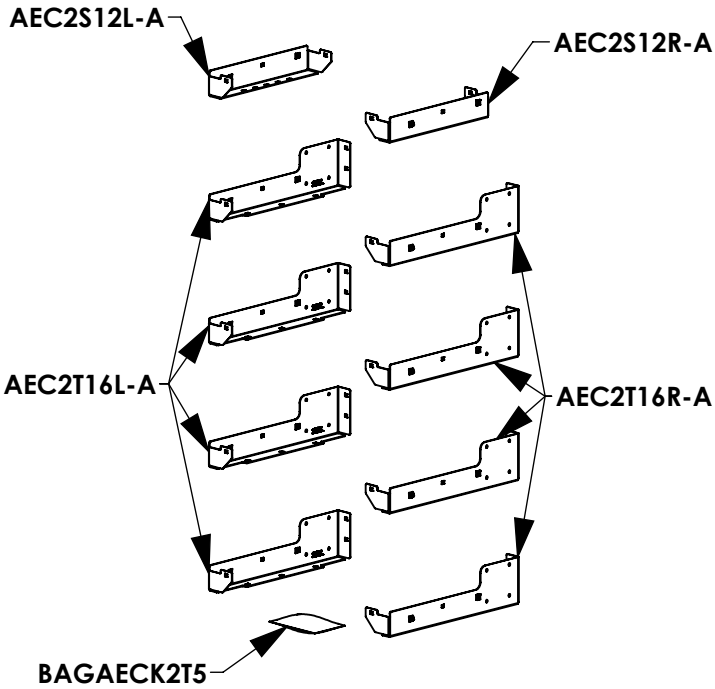

AECK2T16A5

18 INCH END CAP KIT PRODUCT STRUCTURES

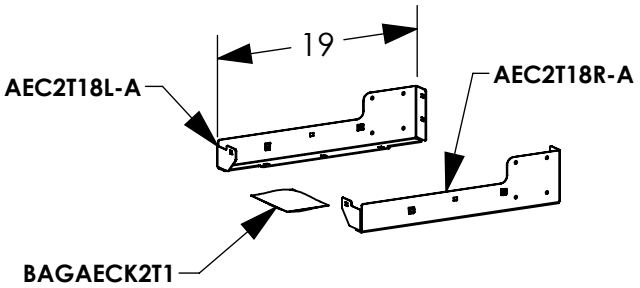

AECK2T18A1

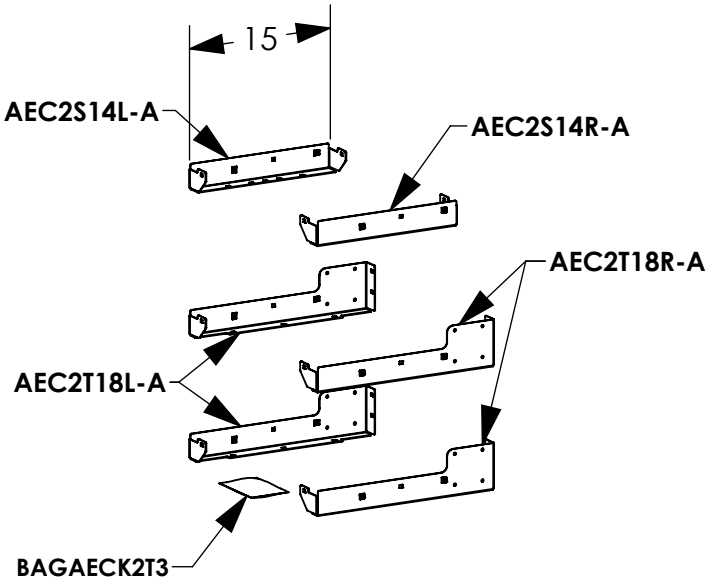

AECK2T18A3

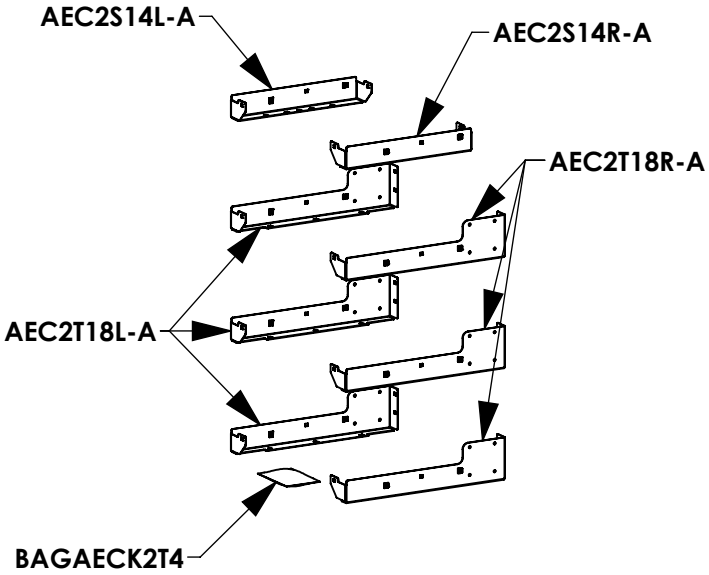

AECK2T18A4

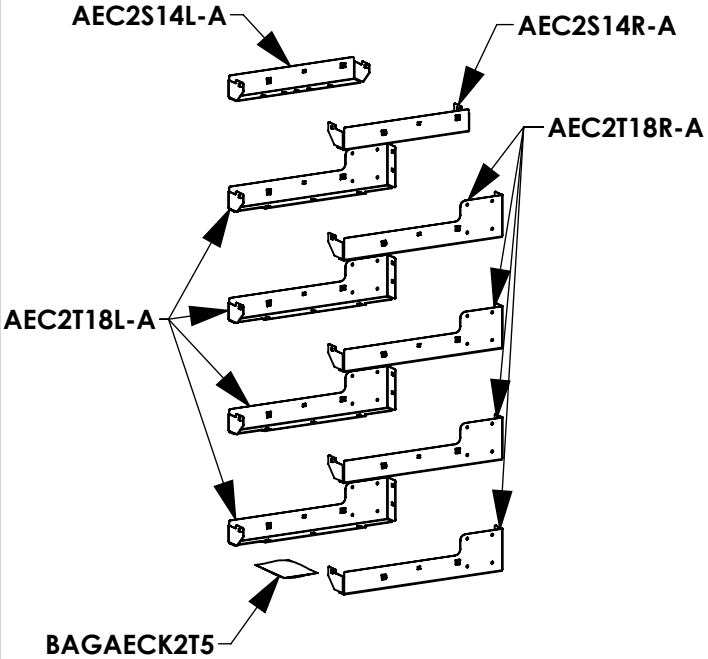

AECK2T18A5

14 INCH DEEP SHELF KIT PRODUCT STRUCTURES

NOTE: SHELF LENGTHS (NOTATED AS ##) RANGE FROM 24" - 72", AT 6" INCREMENTS
EXAMPLE SHELF PART NUMBER: ASF2T1448-G
EXAMPLE SHELF KIT PART NUMBER: ASFK2T1448G1

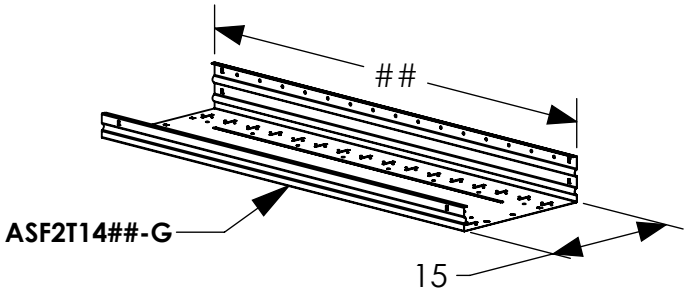

ASFK2T14##G1

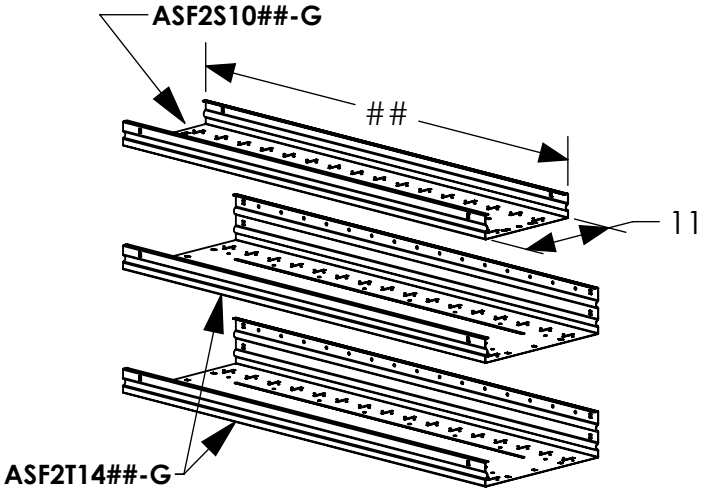

ASFK2T14##G3

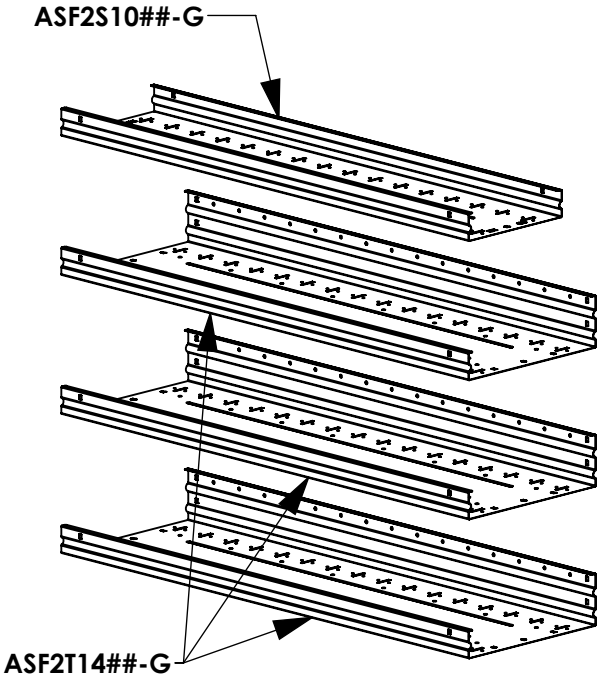

ASFK2T14##G4

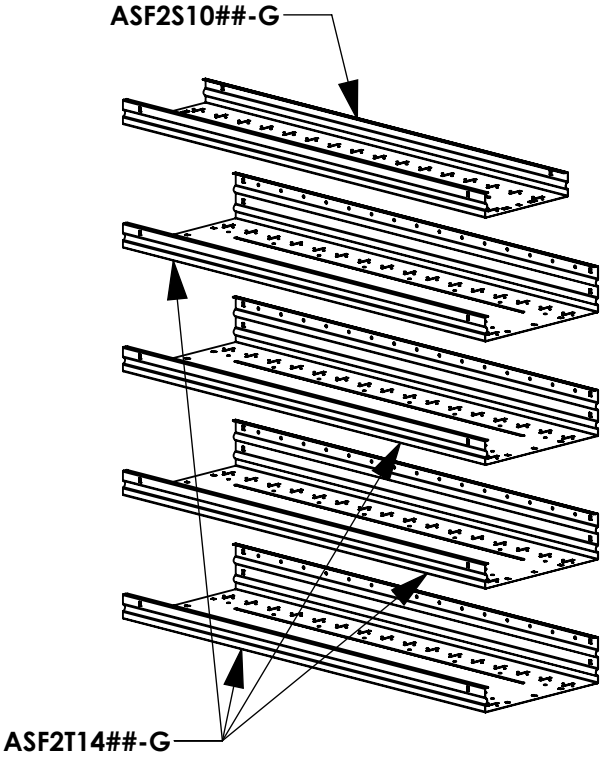

ASFK2T14##G5

16 INCH DEEP SHELF KIT PRODUCT STRUCTURES

NOTE: SHELF LENGTHS (NOTATED AS ##) RANGE FROM 24" - 72", AT 6" INCREMENTS
EXAMPLE SHELF PART NUMBER: ASF2T1648-G
EXAMPLE SHELF KIT PART NUMBER: ASFK2T1648G1

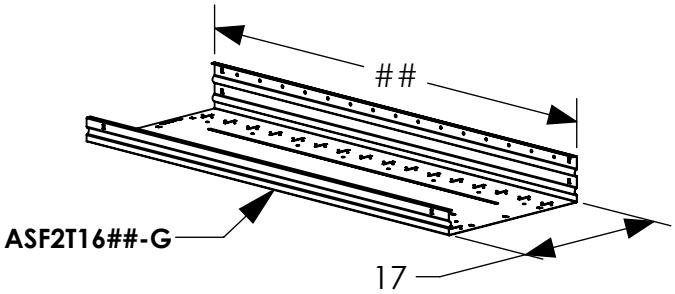

ASFK2T16##G1

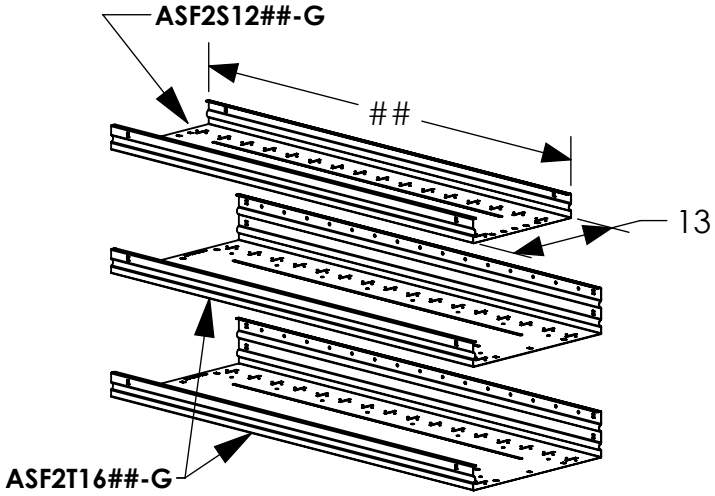

ASFK2T16##G3

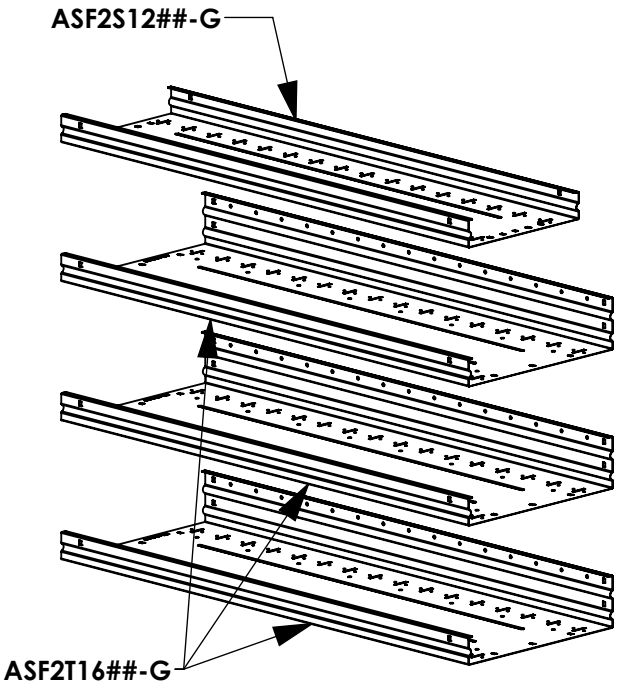

ASFK2T16##G4

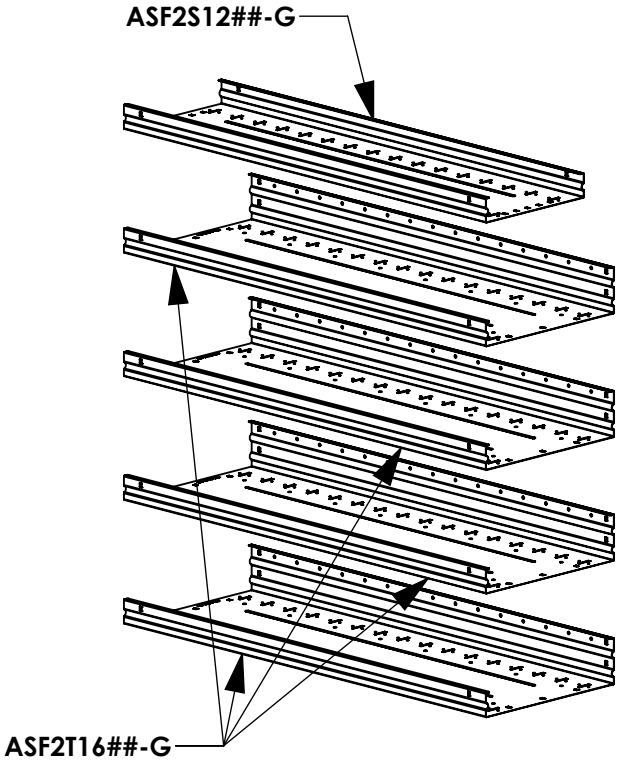

ASFK2T16##G5

16 INCH DEEP SHELF KIT PRODUCT STRUCTURES

NOTE: SHELF LENGTHS (NOTATED AS ##) RANGE FROM 24" - 72", AT 6" INCREMENTS
EXAMPLE SHELF PART NUMBER: ASF2T1848-G
EXAMPLE SHELF KIT PART NUMBER: ASFK2T1848G1

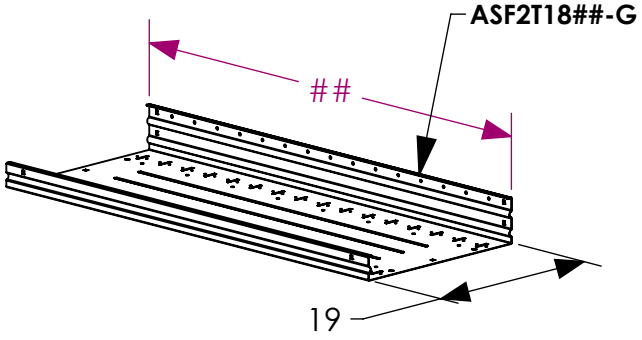

ASFK2T18##G1

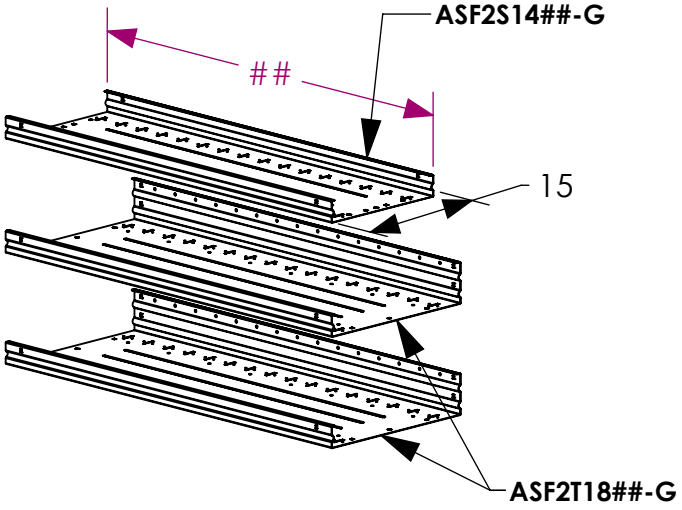

ASFK2T18##G3

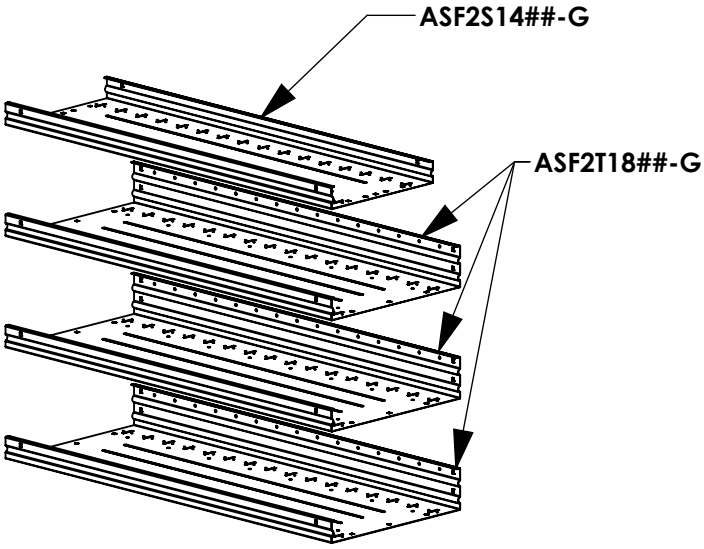

ASFK2T18##G4

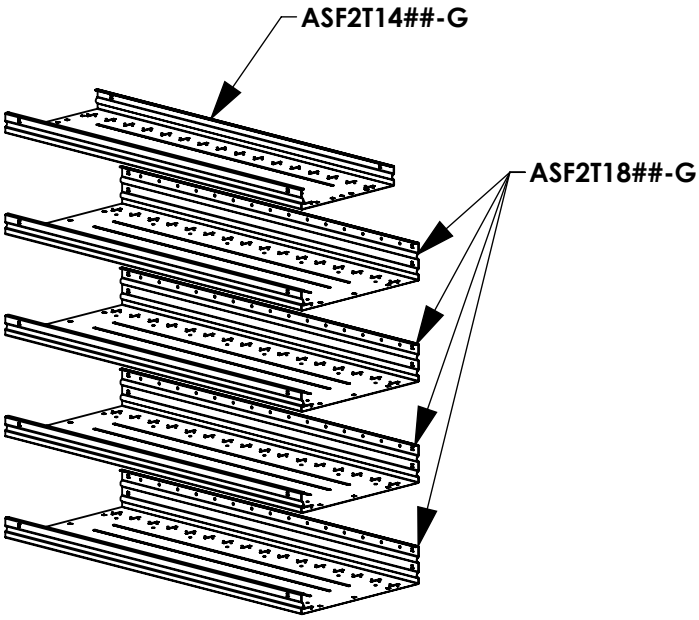

ASFK2T18##G5

14 IN DEEP CENTER SUPPORT KIT PRODUCT STRUCTURES

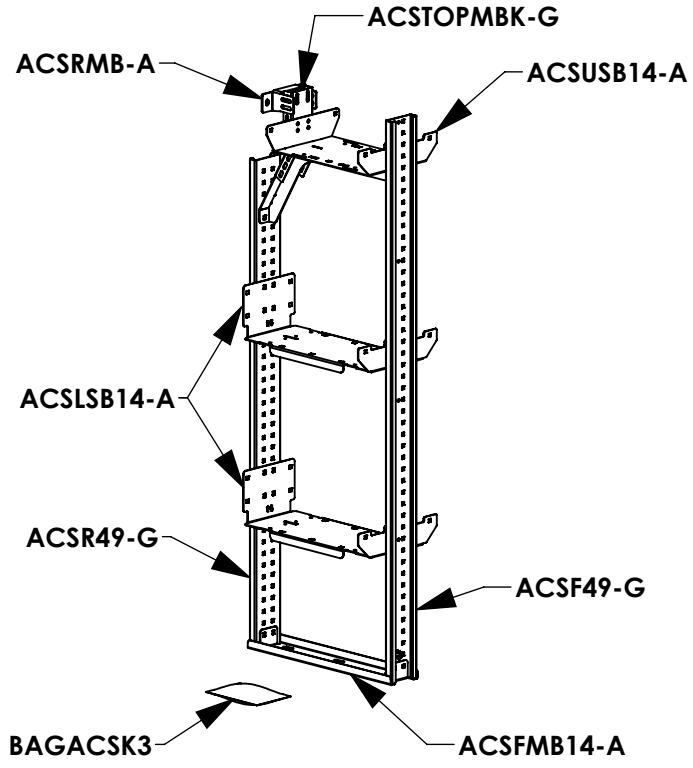

ACSK1449A3

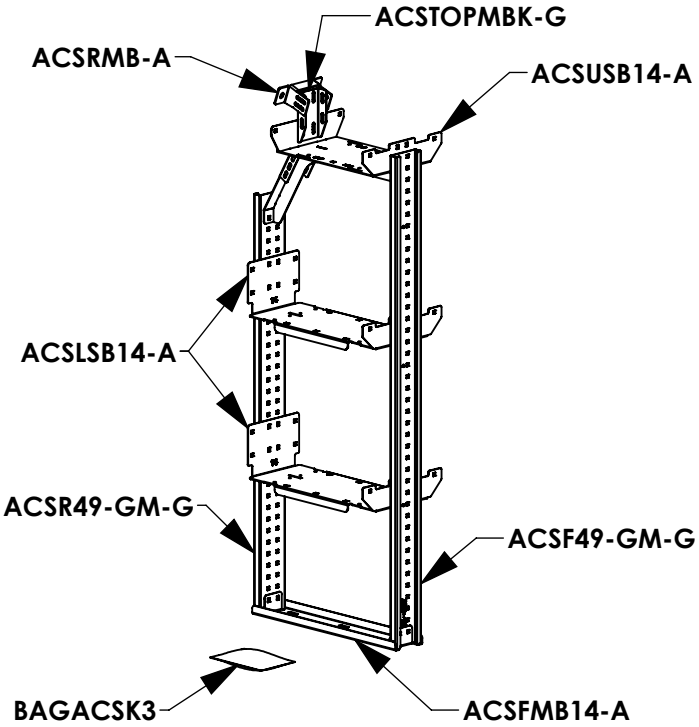

ACSK1449-GMA3

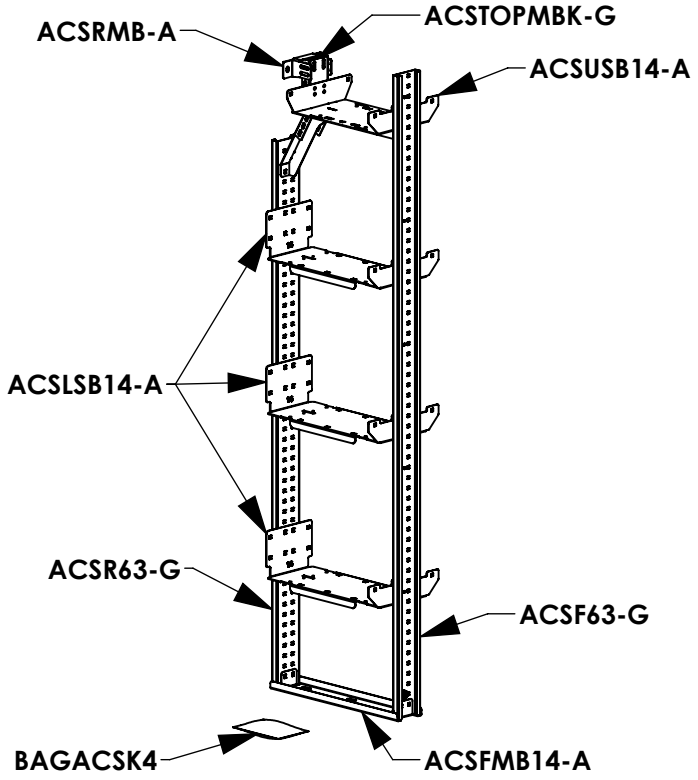

ACSK1463A4

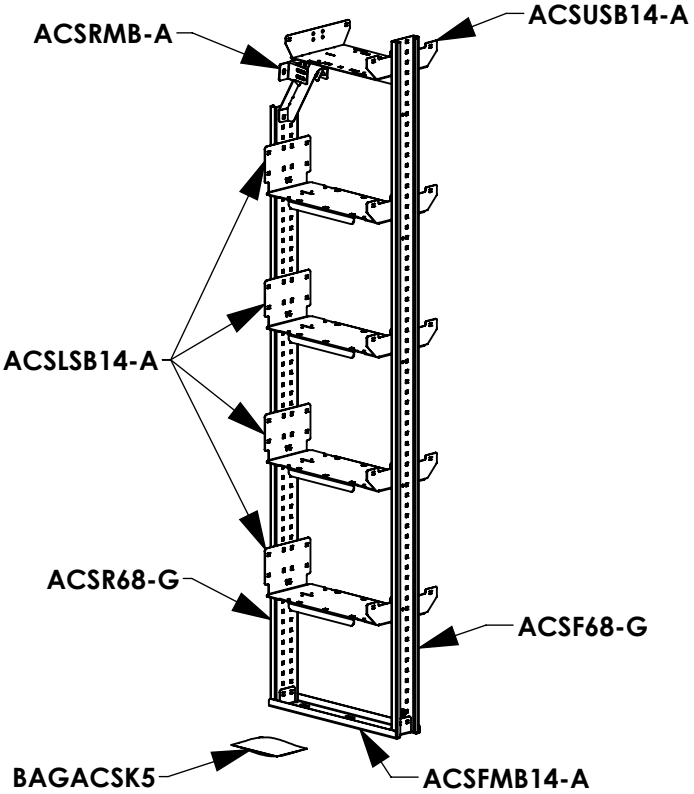

ACSK1468A5

16 IN DEEP CENTER SUPPORT KIT PRODUCT STRUCTURES

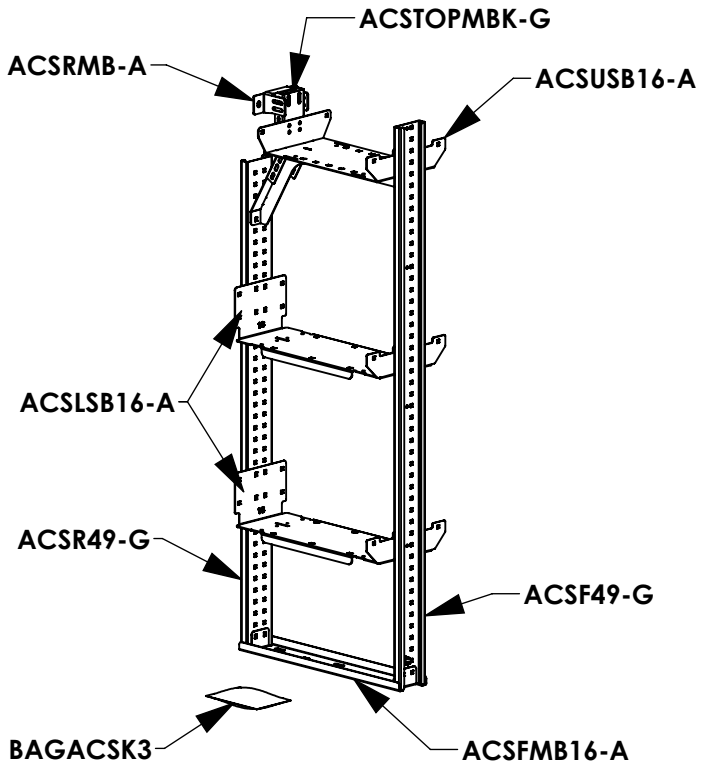

ACSK1649A3

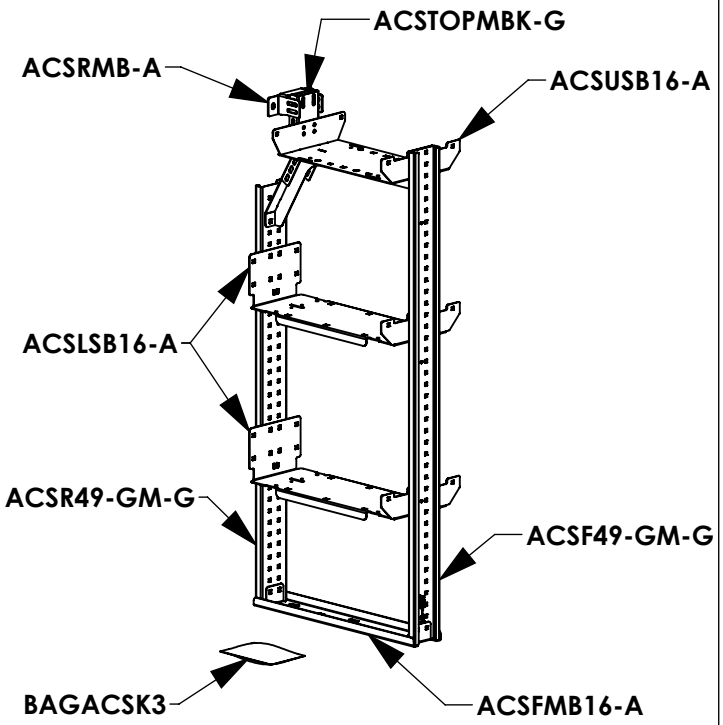

ACSK1649-GMA3

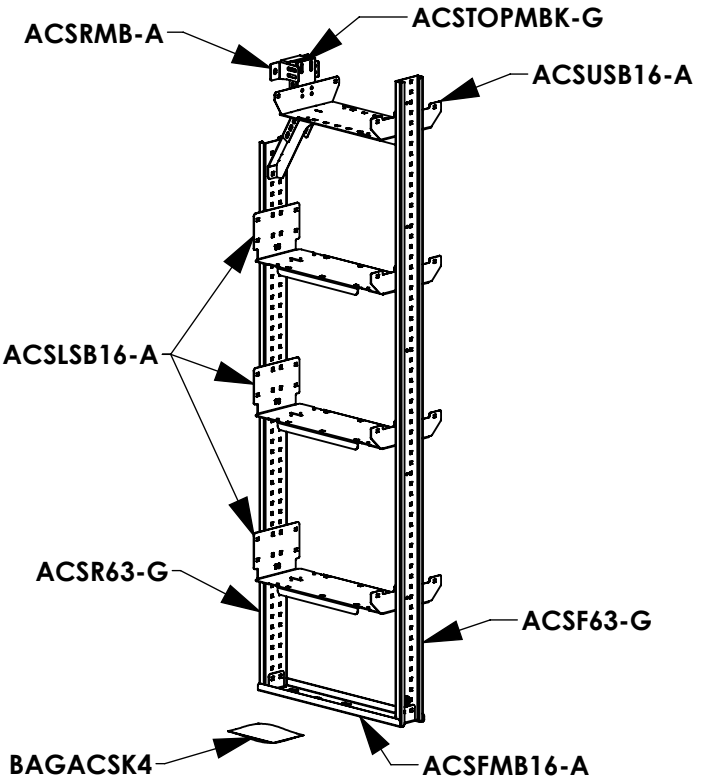

ACSK1663A4

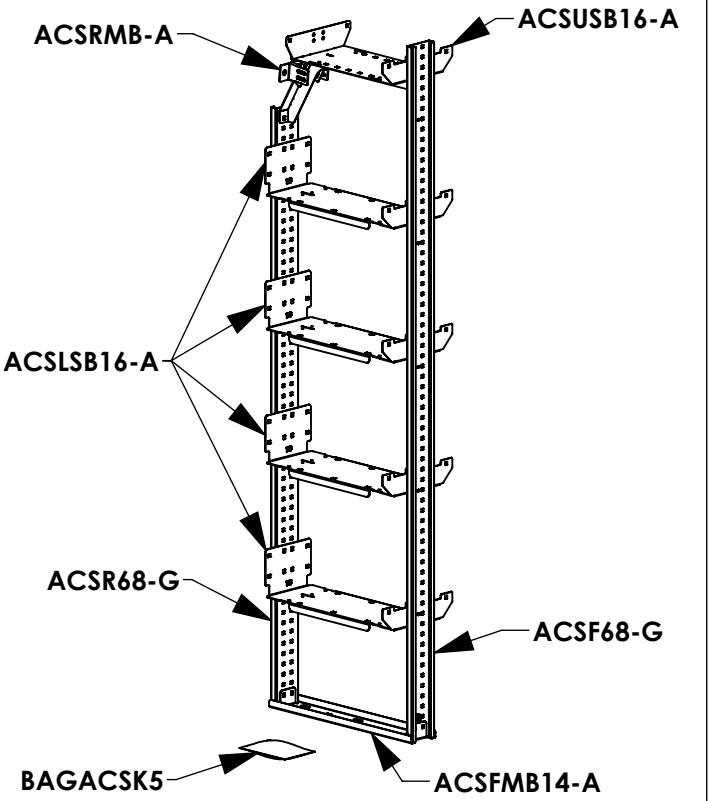

ACSK1668A5

18 IN DEEP CENTER SUPPORT KIT PRODUCT STRUCTURES

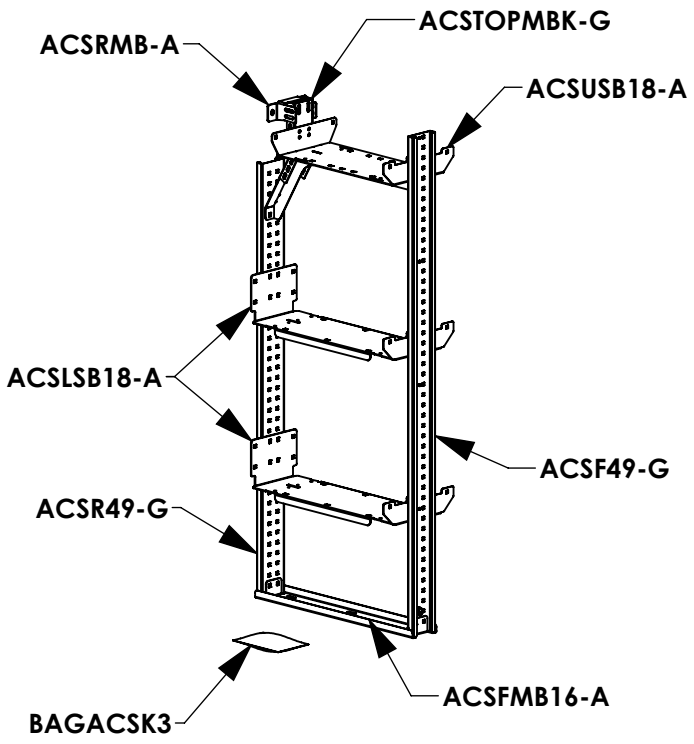

ACSK1849A3

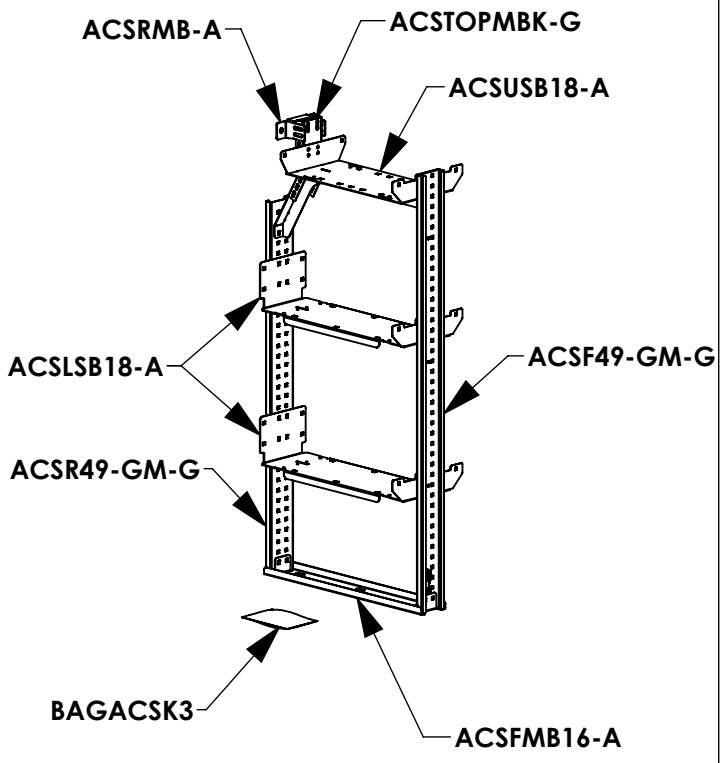

ACSK1849-GMA3

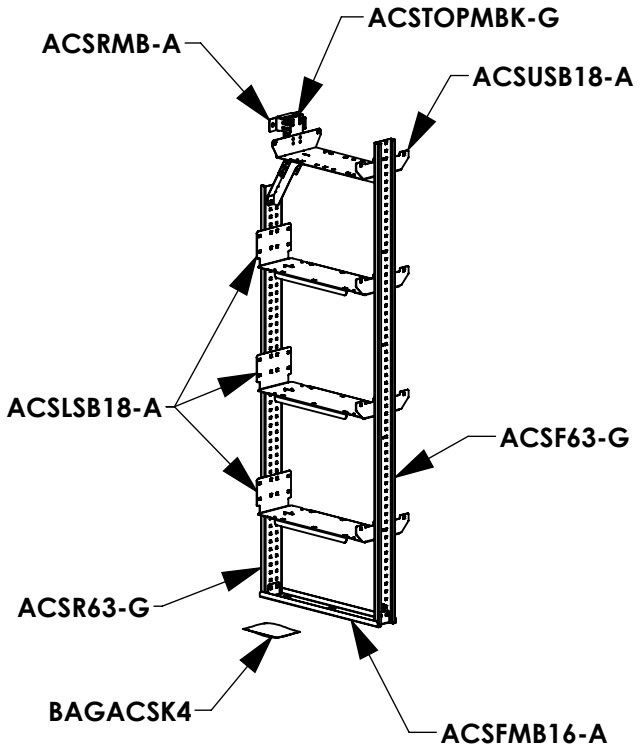

ACSK1863A4

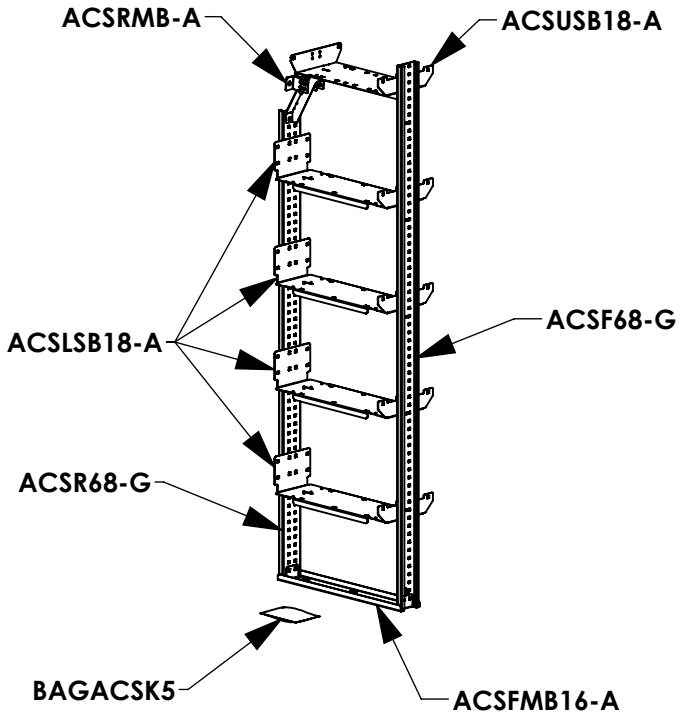

ACSK1868A5

SINGLE CENTER SUPPORT KITS AND DIMENSIONS

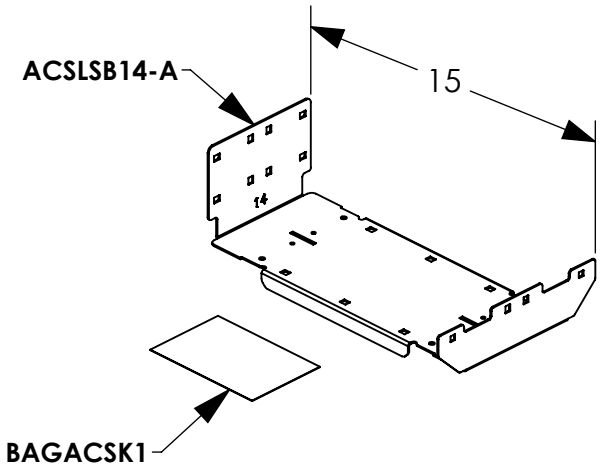

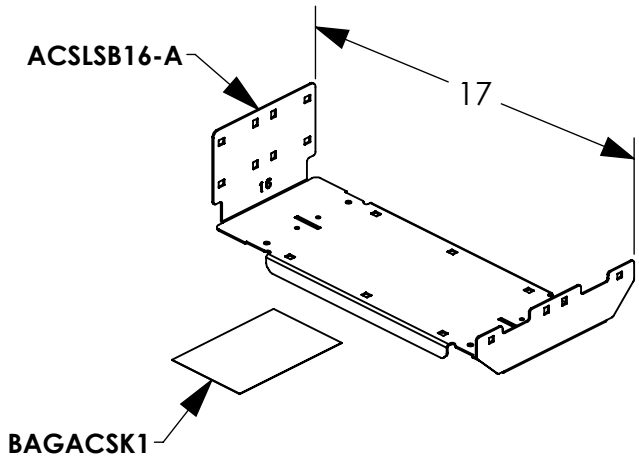

ACSK14A1

ACSK16A1

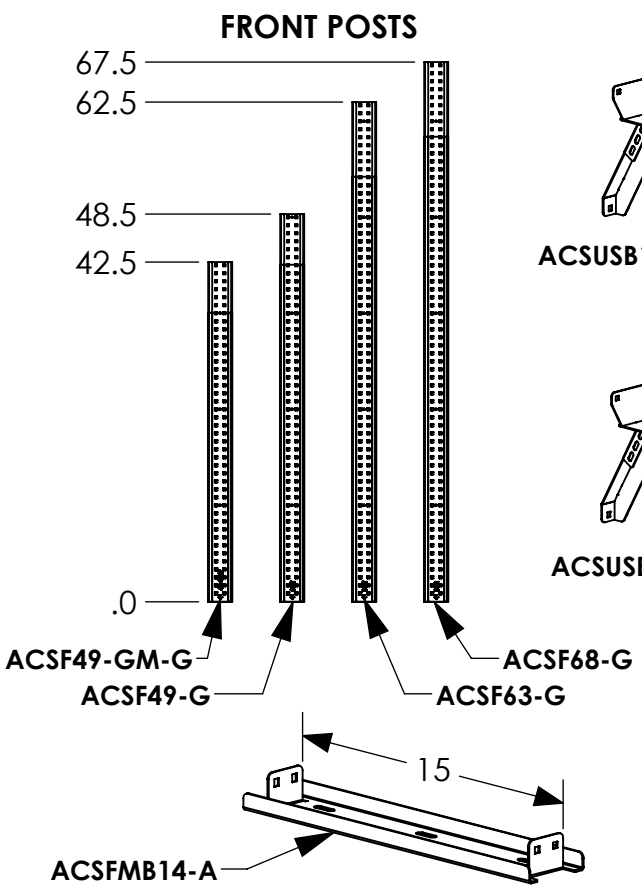

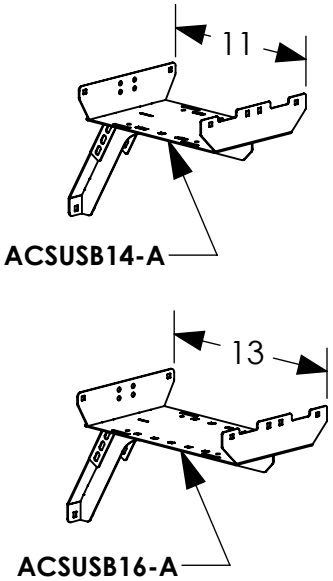

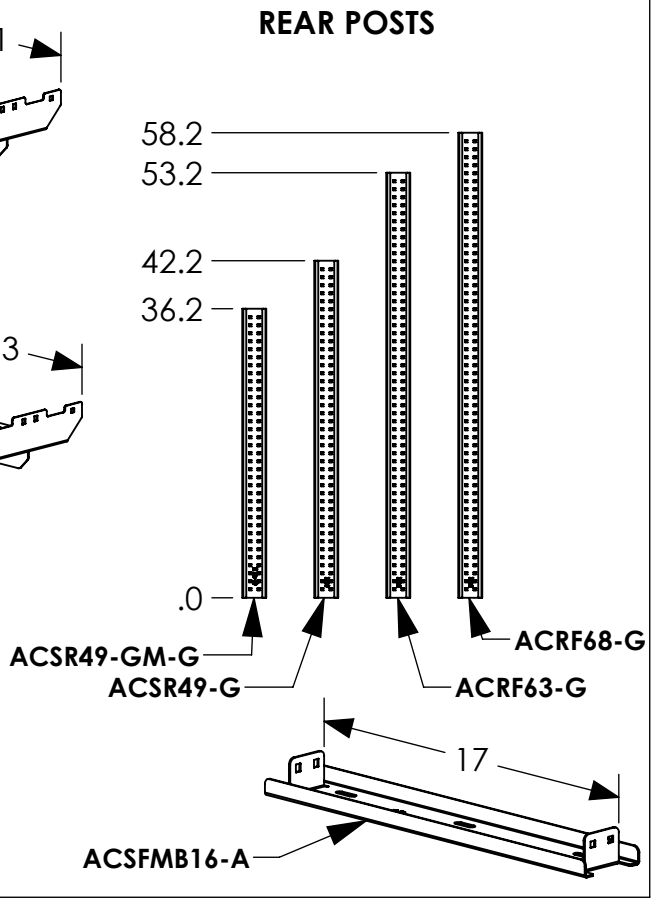

SINGLE CENTER SUPPORT KITS AND DIMENSIONS

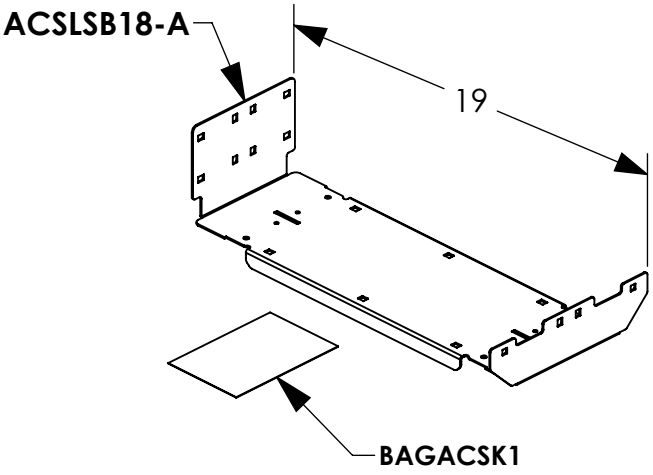

ACSK18A1

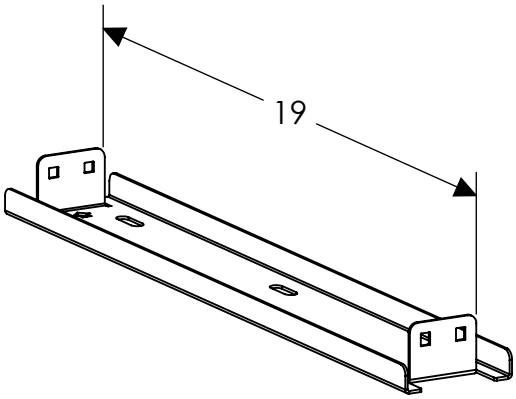

ACSFMB18-A

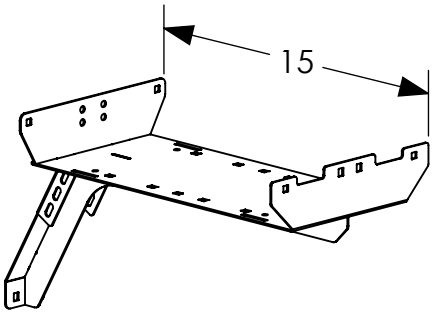

ACSUSB18-A

MOUNTING BRACKET KIT PRODUCT STRUCTURES

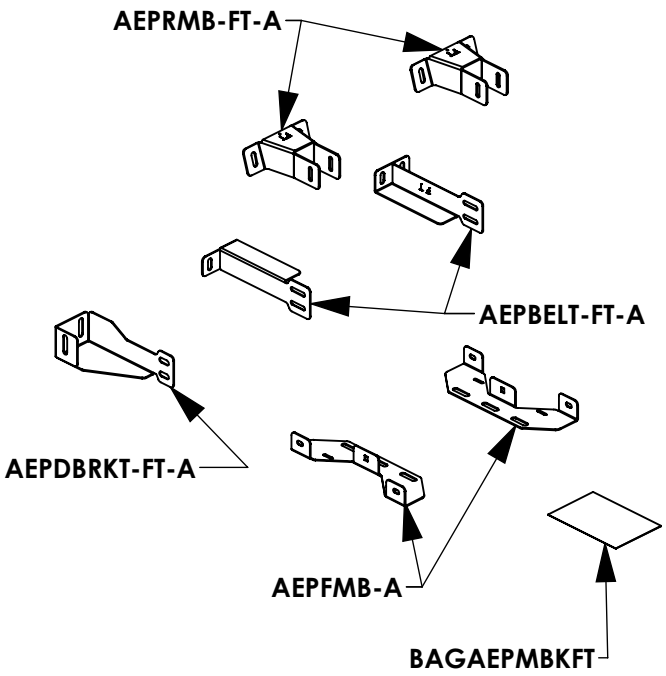

AEPMBKFTA

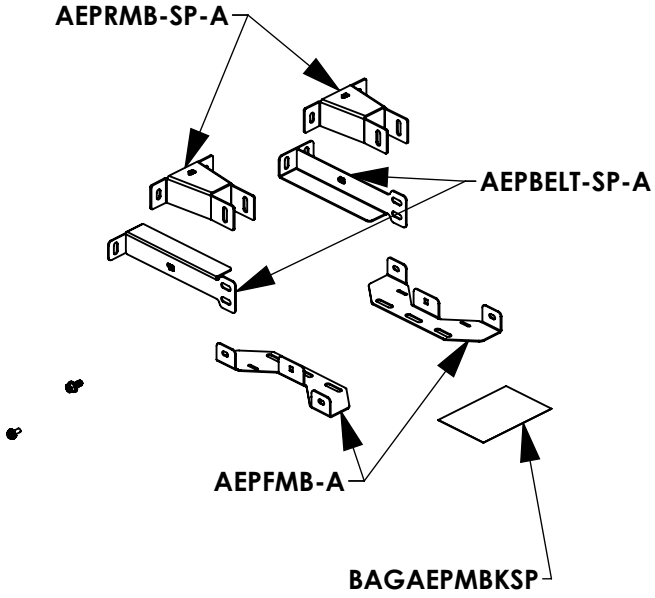

AEPMBKSPA

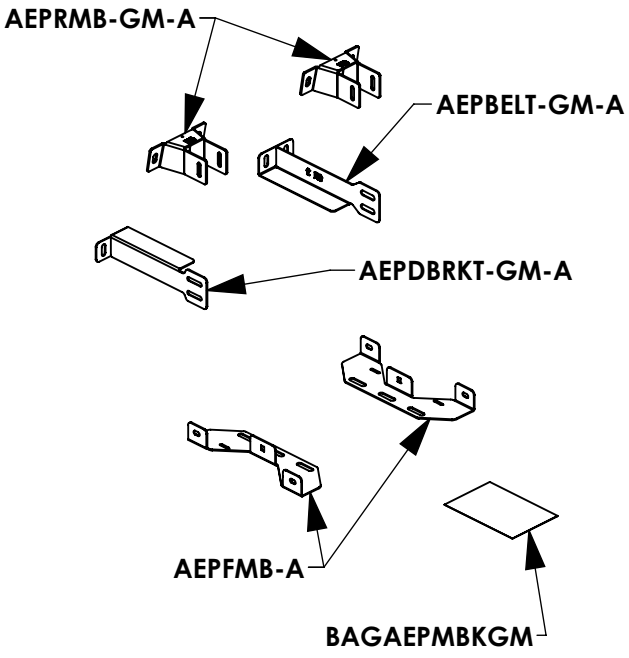

AEPMBKGMA

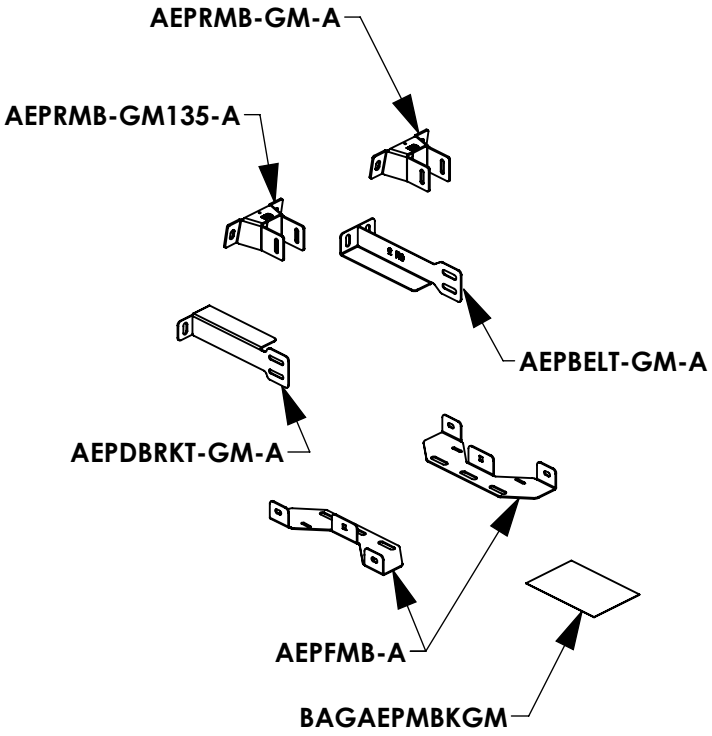

AEPMBKGM135PSA

MOUNTING BRACKET KIT PRODUCT STRUCTURES

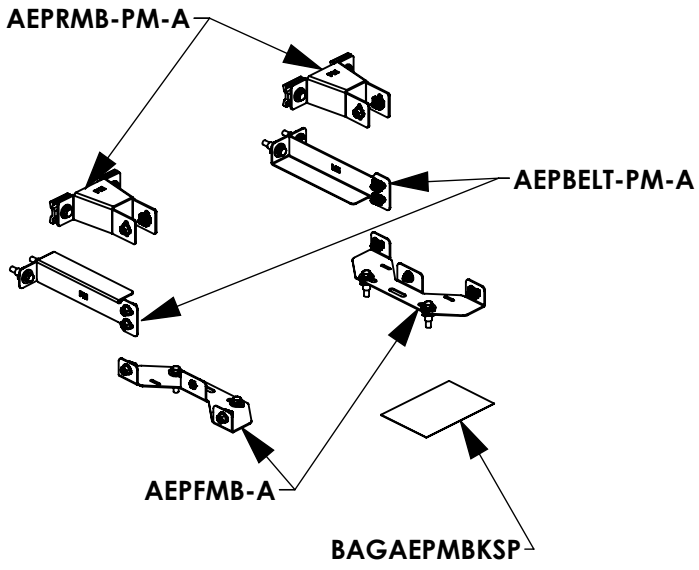

AEPMBKPMA

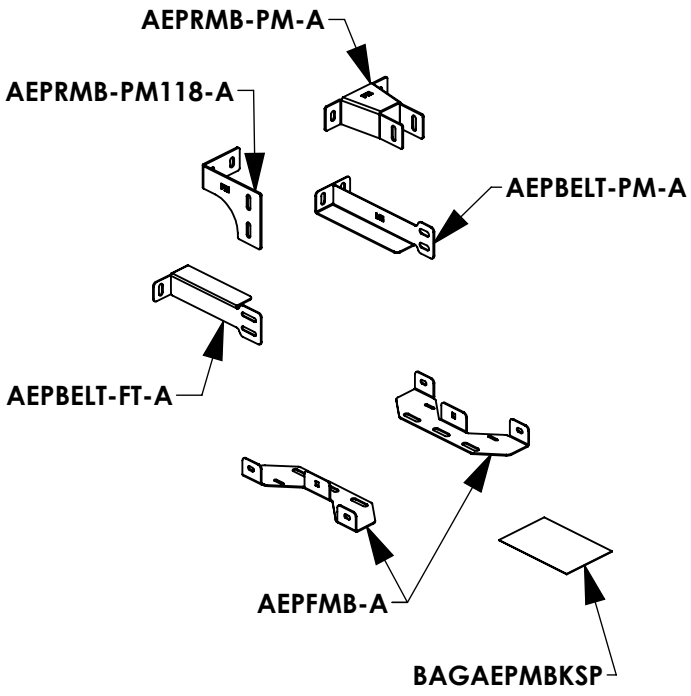

AEPMBKPM118PSA

INSTR. NUMBER : INS-ASCH	PG: 1	REV: A
PART NUMBER : SEE BOM		
PART DESC. • CASE HOLDER TOWER • INSTRUCTION		

AS-CHS1

ITEM NO.	PART NUMBER	DESCRIPTION	QTY.
1	ASCH2416-G	SHELF, CASE HOLDER, 24X16, GRAY	1
2	BAGAS-CHS1	BAG FOR AS-CHS1	1

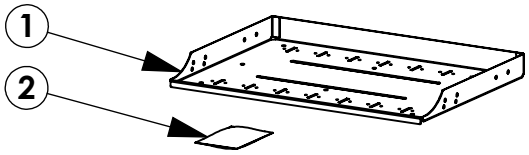

AS-CH48FTLA

ITEM NO.	PART NUMBER	DESCRIPTION	QTY.
1	AS-CH48	CASE HOLDER TOWER, 48	1
2	AEPMBKFTA	END PANL MNT BKT KIT,FT,A	1

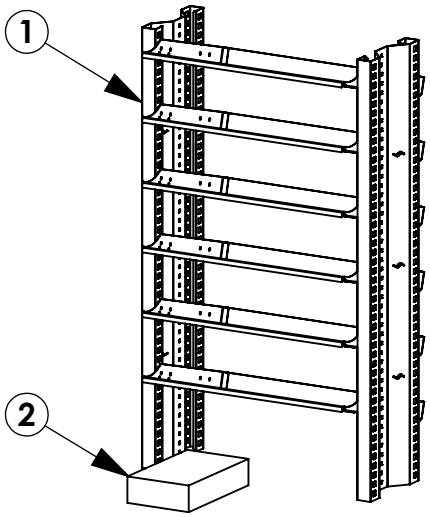

AS-CH48GMA

ITEM NO.	PART NUMBER	DESCRIPTION	QTY.
1	AS-CH48	CASE HOLDER TOWER, 48	1
2	AEPMBKGMA	END PANL MNT BKT,GM,A	1

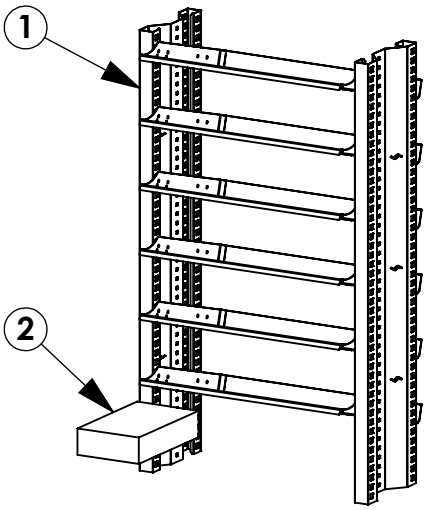

AS-CH48FTLAO

ITEM NO.	PART NUMBER	DESCRIPTION	QTY.
1	AS-CH48AO	CASE HOLDER TOWER, ADD ON, 48	1
2	AEPMBKFT1A	END PANL MNT BKT KIT,FT,A	1

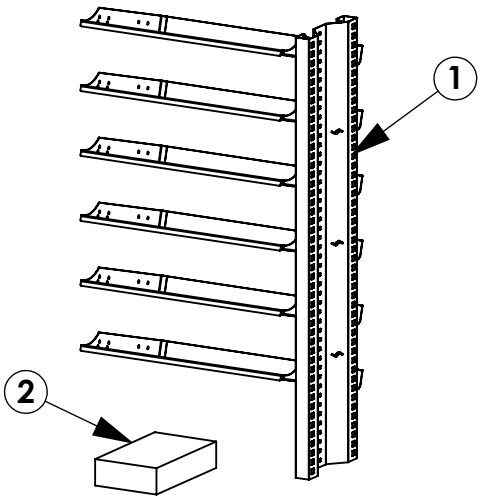

AS-CH48GMAO

ITEM NO.	PART NUMBER	DESCRIPTION	QTY.
1	AS-CH48AO	CASE HOLDER TOWER, ADD ON, 48	1
2	AEPMBKGM1A	END PANL MNT BKT, GM, 1, A	1

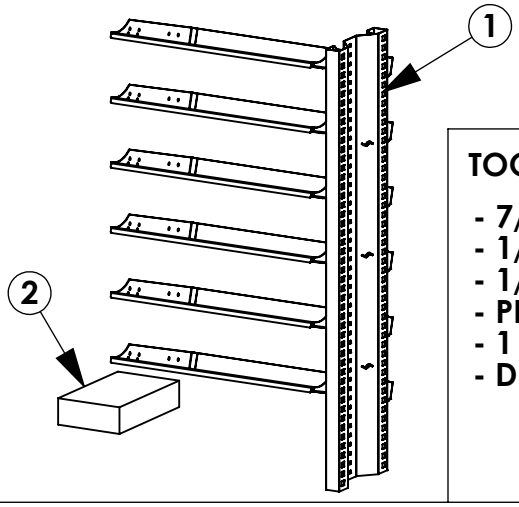

TOOLS NEEDED:

- 7/16" WRENCH
- 1/2" WRENCH
- 1/2" DRILL BIT
- PLUSNUT GUN
- 1 3/16" HOLE SAW
- DRILL

INSTR. NUMBER : INS-ASCH	PG: 2	REV: A

PART NUMBER : **SEE BOM**

PART DESC. • CASE HOLDER TOWER
• INSTRUCTION

AS-CH63FTMA

ITEM NO.	PART NUMBER	DESCRIPTION	QTY.
1	AS-CH63	CASE HOLDER TOWER, 63	1
2	AEPMBKFTA	END PANL MNT BKT KIT,FT,A	1

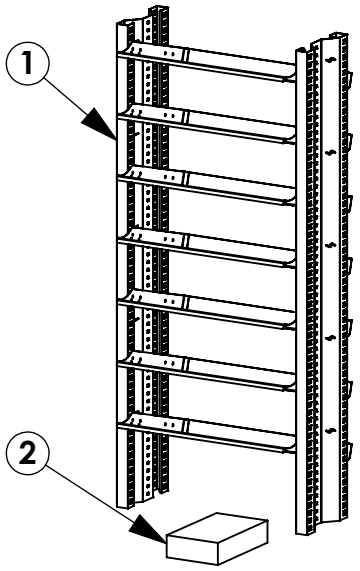

AS-CH63PMLA

ITEM NO.	PART NUMBER	DESCRIPTION	QTY.
1	AS-CH63	CASE HOLDER TOWER, 63	1
2	AEPMBKPMA	END PANL MNT BKT KIT, PM, A	1

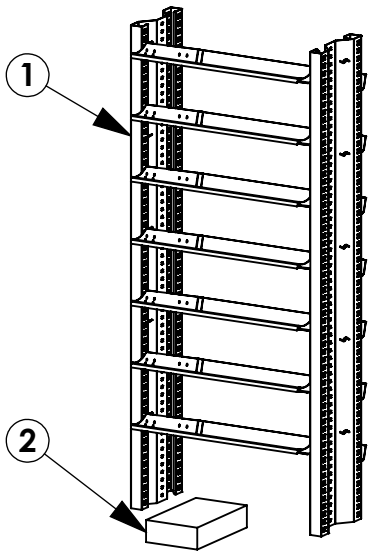

AS-CH63SPSA

ITEM NO.	PART NUMBER	DESCRIPTION	QTY.
1	AS-CH63	CASE HOLDER TOWER, 63	1
2	AEPMBKSPA	END PANL MNT BKT KIT,SP,A	1

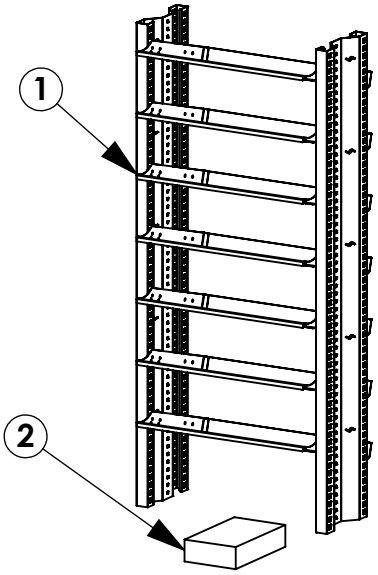

AS-CH63FTMAO

ITEM NO.	PART NUMBER	DESCRIPTION	QTY.
1	AS-CH63AO	CASE HOLDER TOWER, 63, ADD ON	1
2	AEPMBKFT1A	END PANL MNT BKT KIT,FT,A	1

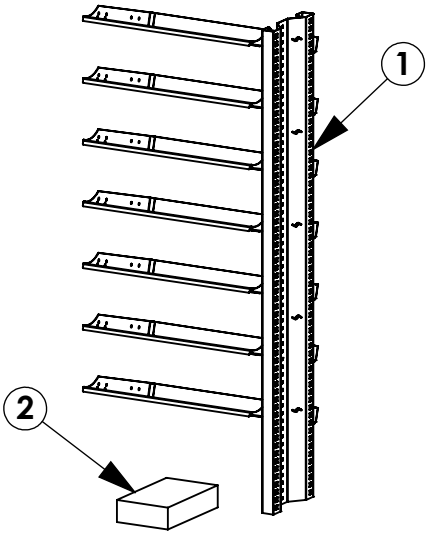

INSTR. NUMBER : INS-ASCH	PG: 3	REV: A

PART NUMBER : **SEE BOM**

PART DESC. • CASE HOLDER TOWER
• INSTRUCTION

AS-CH63PMLAO

ITEM NO.	PART NUMBER	DESCRIPTION	QTY.
1	AS-CH63AO	CASE HOLDER TOWER, 63, ADD ON	1
2	AEPMBKPM1A	END PANL MNT BKT KIT, PM,1,A	1

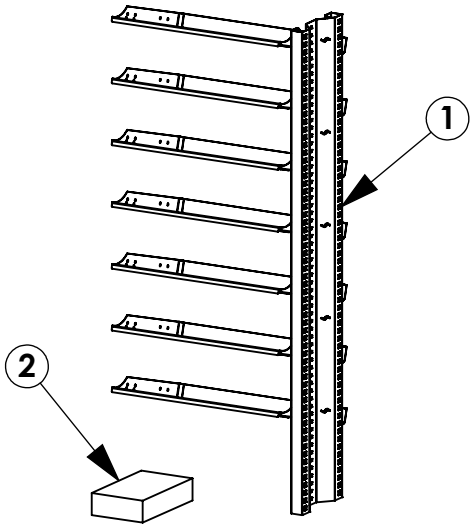

AS-CH63SPSAO

ITEM NO.	PART NUMBER	DESCRIPTION	QTY.
1	AS-CH63AO	CASE HOLDER TOWER, 63, ADD ON	1
2	AEPMBKSP1A	END PANL MNT BKT KIT, SP,1,A	1

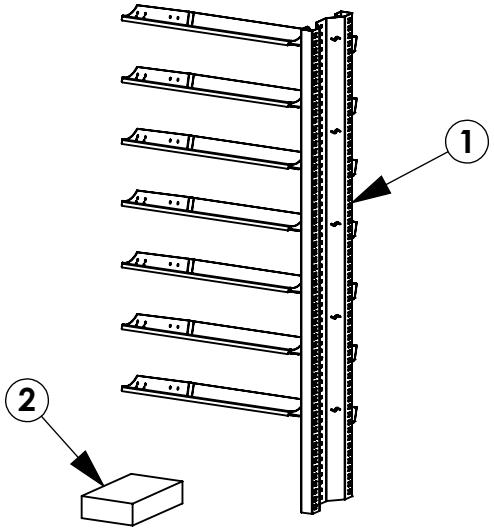

AS-CH68FTHA

ITEM NO.	PART NUMBER	DESCRIPTION	QTY.
1	AS-CH68	CASE HOLDER TOWER, 68	1
2	AEPMBKFTA	END PANL MNT BKT KIT,FT,A	1

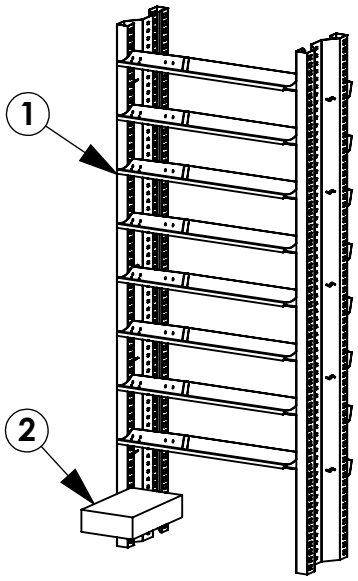

AS-CH68PMHA

ITEM NO.	PART NUMBER	DESCRIPTION	QTY.
1	AS-CH68	CASE HOLDER TOWER, 68	1
2	AEPMBKPMA	END PANL MNT BKT KIT, PM, A	1

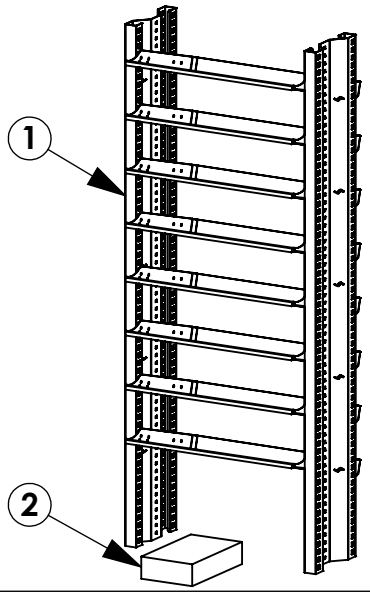

INSTR. NUMBER : INS-ASCH	PG: 4	REV: A

PART NUMBER : **SEE BOM**

PART DESC. • CASE HOLDER TOWER
• INSTRUCTION

AS-CH68SPHA			
ITEM NO.	PART NUMBER	DESCRIPTION	QTY.
1	AS-CH68	CASE HOLDER TOWER, 68	1
2	AEPMBKSPA	END PANL MNT BKT KIT,SP,A	1

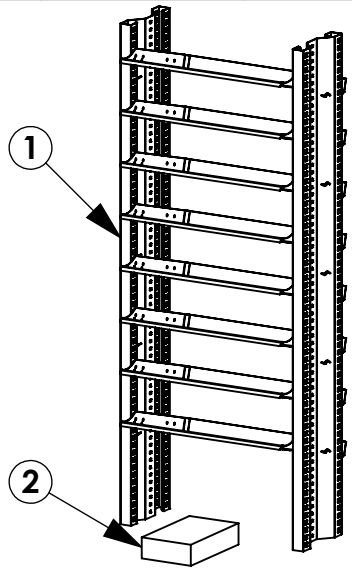

AS-CH68FTHAO			
ITEM NO.	PART NUMBER	DESCRIPTION	QTY.
1	AS-CH68AO	CASE HOLDER TOWER, ADD ON, 68	1
2	AEPMBKFT1A	END PANL MNT BKT KIT,FT,A	1

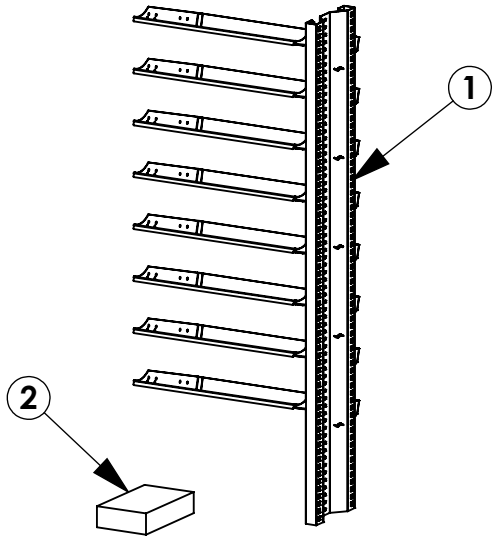

AS-CH68PMHAO			
ITEM NO.	PART NUMBER	DESCRIPTION	QTY.
1	AS-CH68AO	CASE HOLDER TOWER, ADD ON, 68	1
2	AEPMBKPM1A	END PANL MNT BKT KIT, PM,1,A	1

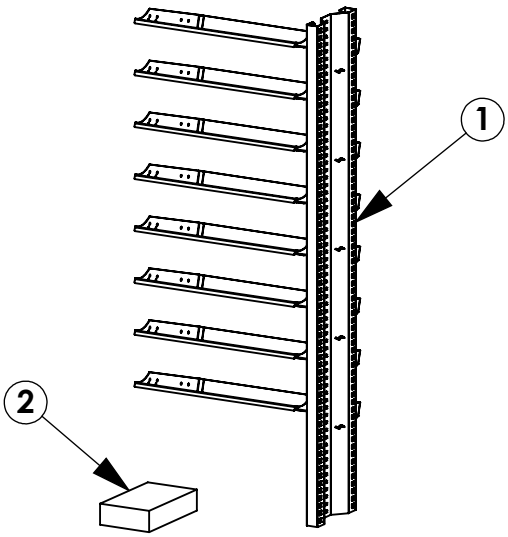

AS-CH68SPHAO			
ITEM NO.	PART NUMBER	DESCRIPTION	QTY.
1	AS-CH68AO	CASE HOLDER TOWER, ADD ON, 68	1
2	AEPMBKSP1A	END PANL MNT BKT KIT, SP,1,A	1

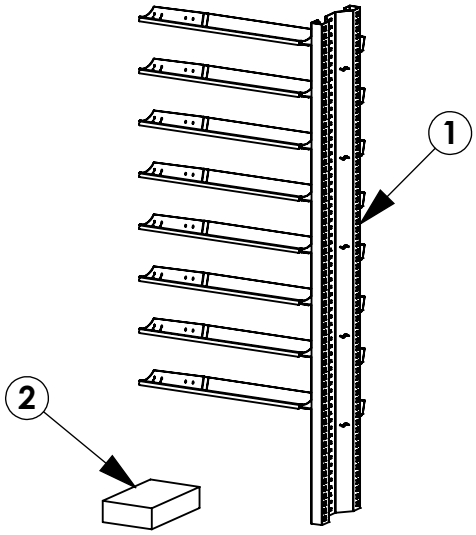

BEST PRACTICES

GET TO KNOW THE VEHICLE - AT THE BEGINNING OF ANY INSTALLATION, CHECK THE LOCATION OF THE FUEL TANK, FUEL LINES, BRAKE LINES, HIGH VOLTAGE BATTERIES AND WIRING HARNESSES TO AVOID INJURY OR PROPERTY DAMAGE FROM TOOL CONTACT.

SEAL ALL EXTERIOR HOLES - ALL INSTALLATION HOLES SHOULD BE SEALED WITH BUTYL TAPE OR SILICON TO PREVENT WATER AND EXHAUST GASES FROM ENTERING THE VEHICLE.

CONTROL DRILL DEPTH - TO AVOID DAMAGE TO THE VEHICLE, USE A DRILL STOP OR CLEARED STEP BIT WHEN DRILLING INSTALLATION HOLES.

ALWAYS ADD PRIMER - WHEN ADDING INSTALLATION HOLES BE SURE TO USE A SELF-ETCHING PRIMER TO PREVENT CORROSION, FASTENER FAILURE AND INJURY.

MOUNTING POINTS MUST HAVE METAL-TO-METAL CONTACT - USE PROVIDED MOUNTING SPACERS TO ACCOMMODATE FOR VEHICLE FEATURES, CARPET OR SUBFLOORS.

PROVIDE CLEARANCE FOR SPACERS - IF THE INSTALLATION VEHICLE CONTAINS A CARPET OR SUBFLOOR, USE A 1-3/16" DIAMETER CARPET CUTTER (P/N: 31183-0) AT ALL MOUNTING LOCATIONS TO OPEN UP ROOM FOR SPACERS.

CHECK SPACER ORIENTATION - BE SURE THAT THE INDENT IN THE SPACER COVERS THE PLUSNUT HEAD; THIS ENSURES THE MOST METAL-TO-METAL CONTACT AND REDUCES VIBRATION.

PLUSNUT INSTALLATION - A PLUSNUT GUN IS RECOMMENDED FOR PLUSNUT INSTALLATION FOR ITS PRODUCTION SPEED. HOWEVER, A PLUSNUT SETTING TOOL CAN ALSO BE USED (P/N: 22200-0).

THRU-BOLT CLEARANCE - WHEN USING A THRU-BOLT AT ANY MOUNTING LOCATION, BE SURE THAT YOUR HOLE HAS 1/16" CLEARANCE.

BEST PRACTICE: ORGANIZE ALL FASTENERS & VERIFY THAT ALL ARE ACCOUNTED FOR

PAGE: 6

FASTENERS USED

BAG REFERENCE: **BAGAEPMBKFT1**

ITEM NO.	PART NUMBER	DESCRIPTION	QTY.
1	35335-0	SLIDE, 1.5" / AD RAIL	2
2	FAS0060	WASHER,LCK SPLIT 1/4 ZP	1
3	FAS0067	WASHER,FLAT USS 1/4 ZP	1
4	FAS0085	WASHER,LCK EXT 5/16 ZP	2
5	03927-2	SPACER, FLR, 1010, 11/16 ZP	2
6	03927-1	SPACER,FLR,1010,11/32 ZP	2
7	FAS0440	NUT,HEX NLK FLG 5/16-18 - ZP	1
8	FAS0055	NUT,HEX NLK FLG 1/4-20 ZP	1
9	FAS0098	Washer, Lock, Split, 5/16, Zinc Plate	4
10	FAS0086	WASHER,FLAT USS 5/16 ZP	6

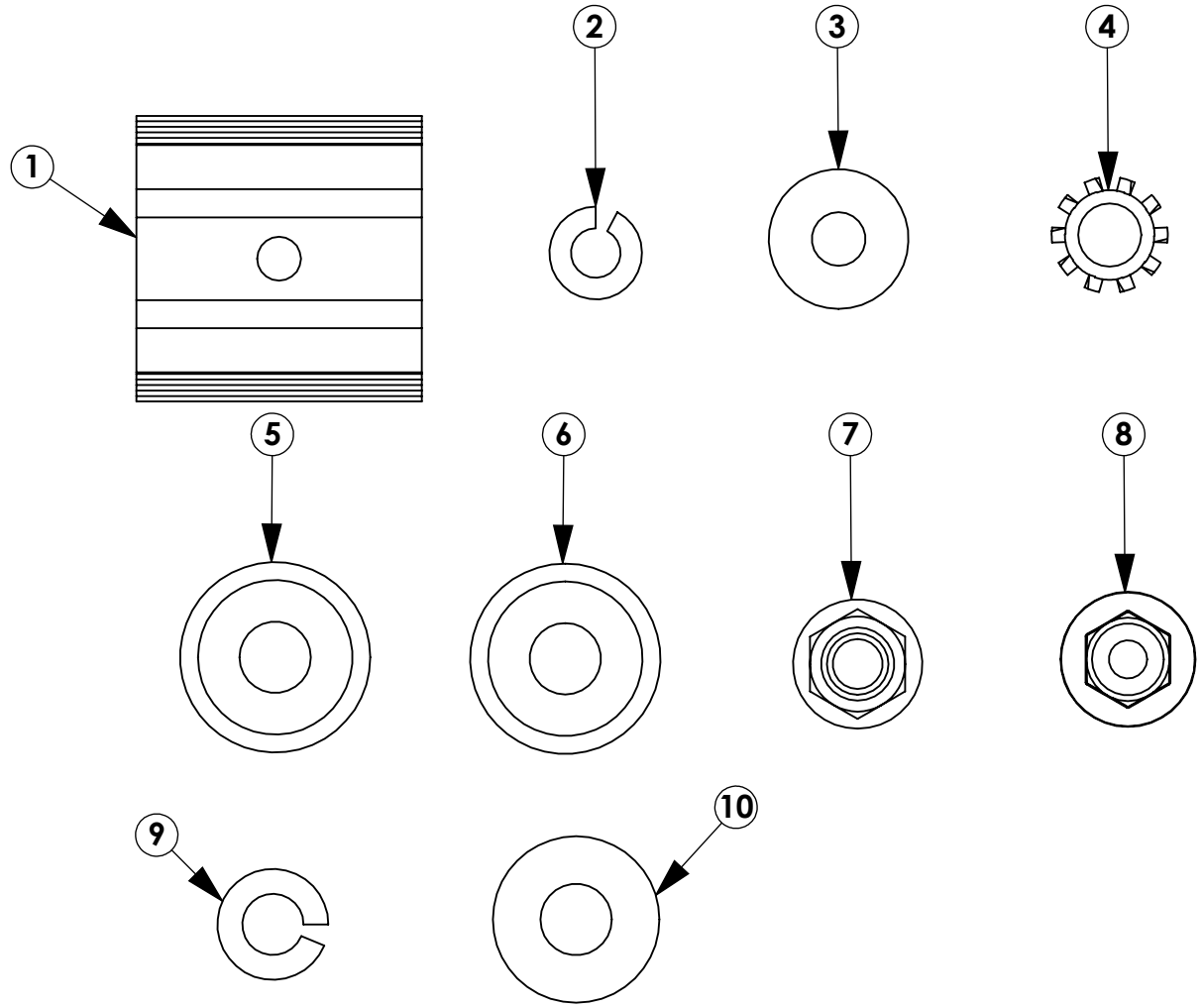

CONTINUE ON NEXT FASTENER PAGE

INTENTIONALLY LEFT BLANK

BEST PRACTICE: ORGANIZE ALL FASTENERS & VERIFY THAT ALL ARE ACCOUNTED FOR

FASTENERS USED

BAG REFERENCE: **BAGAEPMBKFT1**

ITEM NO.	PART NUMBER	DESCRIPTION	QTY.
11	FAS0091	Plusnut, 5/16	4
12	FAS0092	Screw, Hex Hd, 5/16-18x1.50 Zn Plate, G8	2
13	FAS0187	SCR,HH,M6-1.0X22	1
14	FAS0165	SCREW,HH 5/16-18X.62 ZN	2
15	FAS0018	SCREW,HH SFLNG 1/4-20X.62 ZP	6
16	FAS0994	U-NUT, 1/4-20, BO	6
17	FAS0924	BOLT,CRG 1/4-20X.62 FH ZP	1

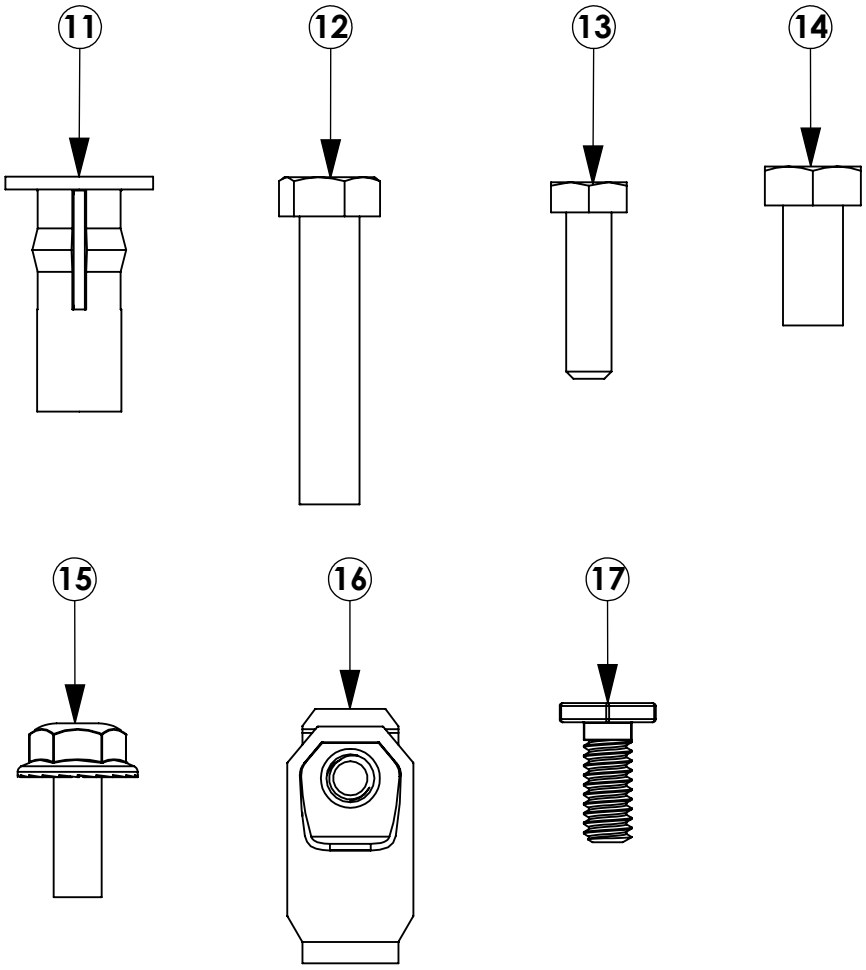

INTENTIONALLY LEFT BLANK

BEST PRACTICE: ORGANIZE ALL FASTENERS & VERIFY THAT ALL ARE ACCOUNTED FOR

FASTENERS USED

BAG REFERENCE: **BAGAEPMBKGM1**

ITEM NO.	PART NUMBER	DESCRIPTION	QTY.
1	35335-0	SLIDE, 1.5" / AD RAIL	4
2	FAS0085	WASHER,LCK EXT 5/16 ZP	4
3	FAS0098	Washer, Lock, Split, 5/16, Zinc Plate	2
4	FAS0055	NUT,HEX NLK FLG 1/4-20 ZP	1
5	03927-1	SPACER,FLR,1010,11/32 ZP	2
6	03927-2	SPACER, FLR, 1010, 11/16 ZP	2
7	FAS0924	BOLT,CRG 1/4-20X.62 FH ZP	1
8	FAS0091	Plusnut, 5/16	2
9	FAS0994	U-NUT, 1/4-20, BO	6
10	FAS0092	Screw, Hex Hd, 5/16-18x1.50 Zn Plate, G8	2
11	FAS0165	SCREW,HH 5/16-18X.62 ZN	4
12	FAS0018	SCREW,HH SFLNG 1/4-20X.62 ZP	6
13	FAS0086	WASHER,FLAT USS 5/16 ZP	6

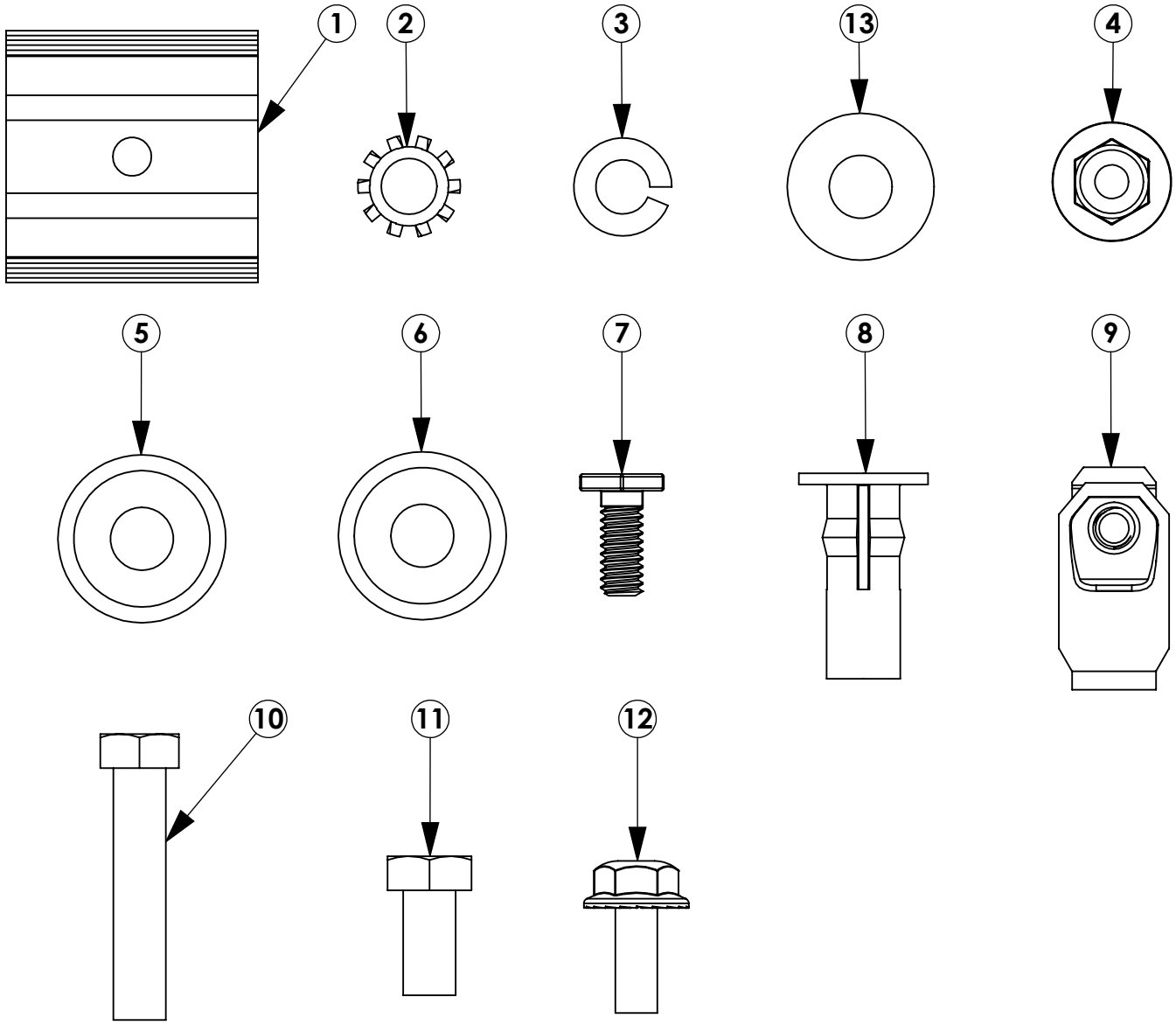

INTENTIONALLY LEFT BLANK

BEST PRACTICE: ORGANIZE ALL FASTENERS & VERIFY THAT ALL ARE ACCOUNTED FOR

FASTENERS USED

BAG REFERENCE: **BAGAEPMBKSP1**

ITEM NO.	PART NUMBER	DESCRIPTION	QTY.
1	FAS0092	Screw, Hex Hd, 5/16-18x1.50 Zn Plate, G8	4
2	FAS0165	SCREW,HH 5/16-18X.62 ZN	2
3	FAS0018	SCREW,HH SFLNG 1/4-20X.62 ZP	6
4	FAS0924	BOLT,CRG 1/4-20X.62 FH ZP	1
5	FAS0055	NUT,HEX NLK FLG 1/4-20 ZP	1
6	FAS0086	WASHER,FLAT USS 5/16 ZP	6
7	FAS0098	Washer, Lock, Split, 5/16, Zinc Plate	4
8	FAS0085	WASHER,LCK EXT 5/16 ZP	2
9	FAS0091	Plusnut, 5/16	4
10	35335-0	SLIDE, 1.5" / AD RAIL	2
11	03927-1	SPACER,FLR,1010,11/32 ZP	2
12	03927-2	SPACER, FLR, 1010, 11/16 ZP	2
13	FAS0994	U-NUT, 1/4-20, BO	6

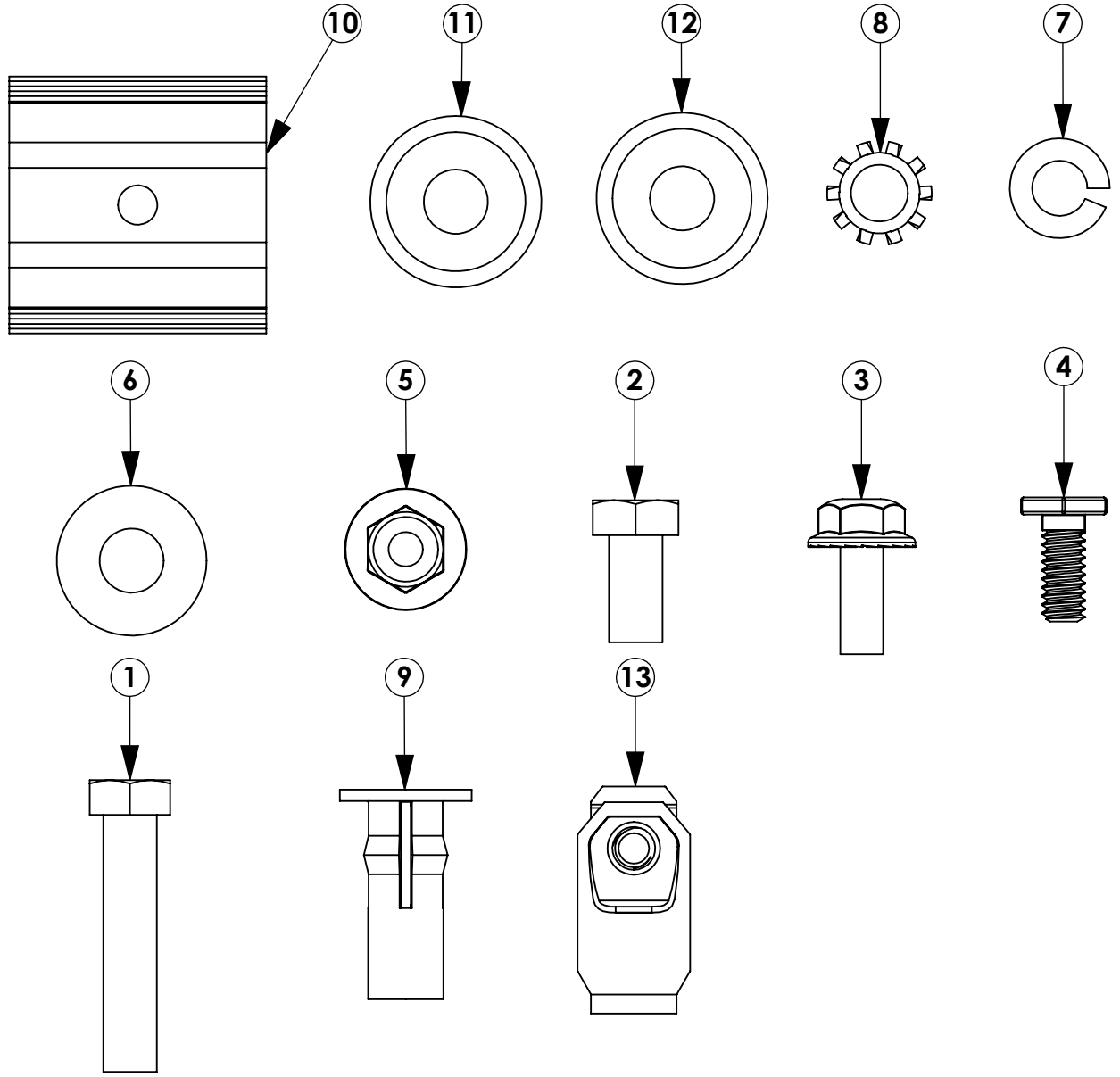

INTENTIONALLY LEFT BLANK

BEST PRACTICE: ORGANIZE ALL FASTENERS & VERIFY THAT ALL ARE ACCOUNTED FOR

FASTENERS USED

BAG REFERENCE: **SEE BOM**

BAGAS-CH68AO

ITEM NO.	PART NUMBER	DESCRIPTION	QTY.
1	FAS0994	U-NUT, 1/4-20, BO	32
2	FAS0018	SCREW,HH SFLNG 1/4-20X.62 ZP	32

BAGAS-CH63AO

ITEM NO.	PART NUMBER	DESCRIPTION	QTY.
1	FAS0994	U-NUT, 1/4-20, BO	28
2	FAS0018	SCREW,HH SFLNG 1/4-20X.62 ZP	28

BAGAS-CH48AO

ITEM NO.	PART NUMBER	DESCRIPTION	QTY.
1	FAS0994	U-NUT, 1/4-20, BO	24
2	FAS0018	SCREW,HH SFLNG 1/4-20X.62 ZP	24

BAGAS-CHS1

ITEM NO.	PART NUMBER	DESCRIPTION	QTY.
1	FAS0994	U-NUT, 1/4-20, BO	4
2	FAS0018	SCREW,HH SFLNG 1/4-20X.62 ZP	4

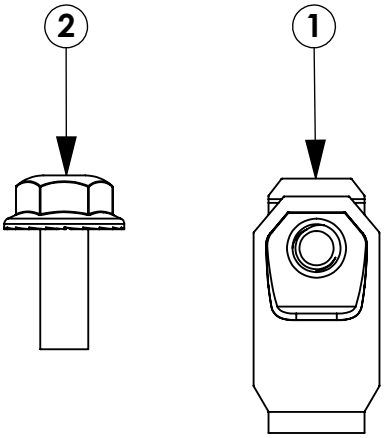

INTENTIONALLY LEFT BLANK

BEST PRACTICE: ORGANIZE ALL HARDWARE PCS. & VERIFY THAT ALL ARE ACCOUNTED FOR

HARDWARE USED

HDW KIT REFERENCE: **AEPMBKFT1**

ITEM NO.	PART NUMBER	DESCRIPTION	QTY.
1	AEPFMB10-A	END PANEL FLR MNT,10,A	1
2	AEPBELT-FT-A	END PANEL BELT BRKT,FT,A	1
3	AEPRMB-FT-A	END PANEL RAIL MNT BKT,FT,A	1
4	BAGAEPMBKFT1	BAG FOR AEPMBKFT1A	1

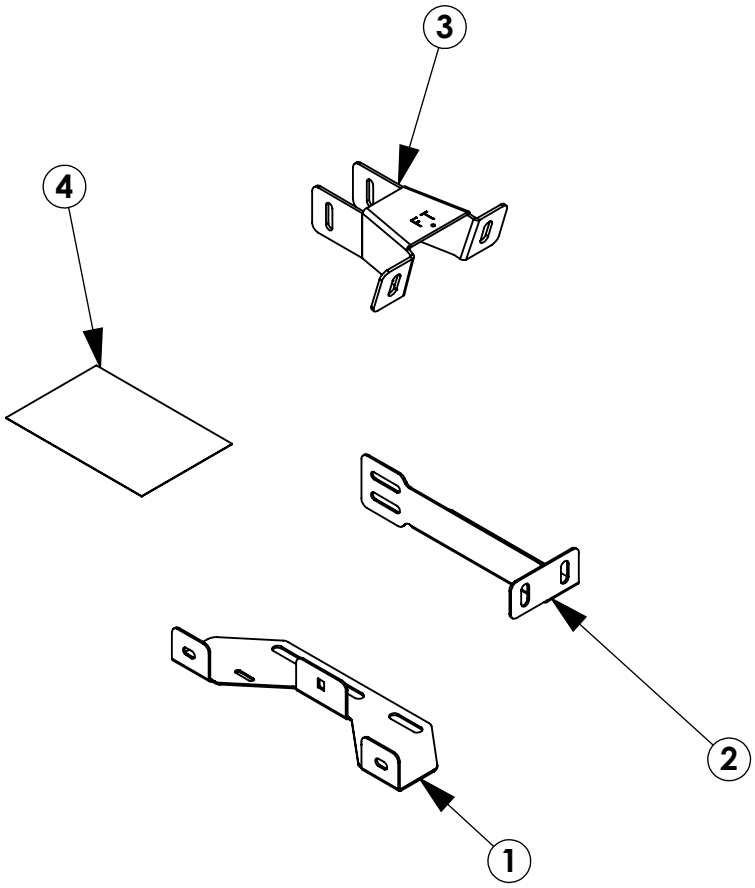

INTENTIONALLY LEFT BLANK

BEST PRACTICE: ORGANIZE ALL HARDWARE PCS. & VERIFY THAT ALL ARE ACCOUNTED FOR

HARDWARE USED

HDW KIT REFERENCE: **SEE BOM**

AEPMBKGM1			
ITEM NO.	**PART NUMBER**	**DESCRIPTION**	**QTY.**
1	AEPFMB10-A	END PANEL FLR MNT,10,A	1
2	AEPRMB-GM	END PANEL RAIL MNT BKT,GM	1
3	AEPBELT-GM-A	END PANEL BELT BRKT,GM,A	1
4	BAGAEPMBKGM1	BAG FOR AEPMBKGM1A	1

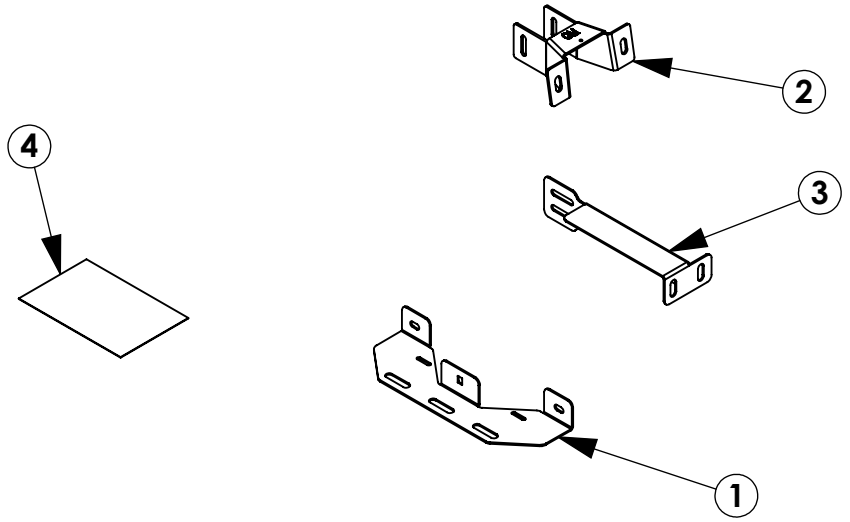

AEPMBKPM1			
ITEM NO.	**PART NUMBER**	**DESCRIPTION**	**QTY.**
1	AEPFMB10-A	END PANEL FLR MNT,10,A	1
2	AEPRMB-PM-A	END PANEL RAIL MNT BKT,PM,A	1
3	AEPBELT-PM-A	END PANEL BELT BRKT,PM,A	1
4	BAGAEPMBKSP1	BAG FOR AEPMBKSP1A	1

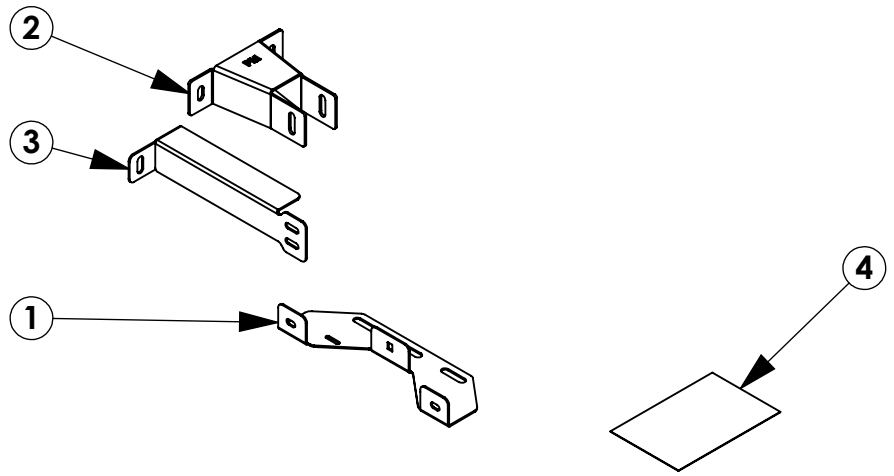

INTENTIONALLY LEFT BLANK

STEP 1 - ASSEMBLE CASE HOLDER SHELVING

Step 1.1
LOCATE DEISRED HOLE HEIGHT FOR SHELF'S.

USE REAR HOLE ON SHELVING TO DETERMINE IF SHELVES WILL BE AT AN ANGLE (AS SHOWN BELOW) EITHER AT 90 OR 16 DEGREES.

Step 1.2
SLIDE FAS0994 INTO SQUARE HOLE, ALIGN HOLES ON SHELVING WITH FAS0994. FULLY TIGHTEN FAS0018

7/16 WRENCH

REPEAR ON OTHER SIDE

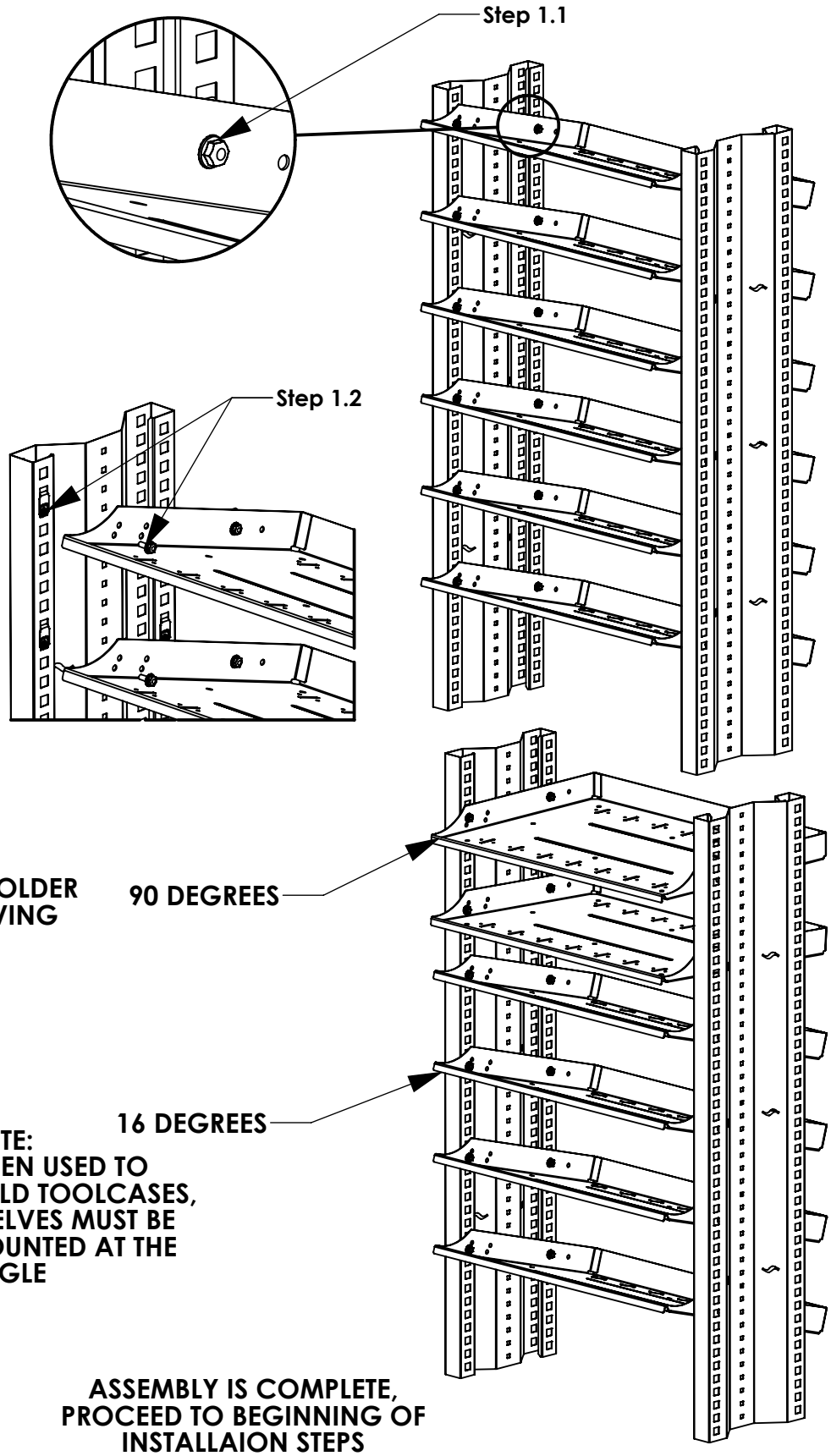

NOTE:
FOLLOW INSTRUCTION FOR BUILDINGCASE HOLDER TOWER ADD ON SHELVING

NOTE:
WHEN USED TO HOLD TOOLCASES, SHELVES MUST BE MOUNTED AT THE ANGLE

ASSEMBLY IS COMPLETE, PROCEED TO BEGINNING OF INSTALLAION STEPS

STEP 2 - ATTACH RAIL MOUNTING BRACKET TO VEHICLE UPPER RAIL KIT

Step 2.1
INSERT RIAL SLIDES INTO UPPER RAIL (IF YOU HAVE NOT DONE ALREADY)

QTY 2 PER RAIL MOUNTING BRACKET (END PANEL)

Step 2.2
LOOSELY ASSEMBLY UNTIL AFTER Step 5.1, (4)FAS0165, (4)FAS0085, (4)FAS0086, (4)35335-0

1/2" WRENCH

Step 2.3
LOOSELY ASSMELBY UNTIL AFTER Step 5.1, (4)FAS0994 & (4)FAS0018

7/16 WRENCH

FAS0094 SHOULD BE INSERTED INTO THE HOLE THAT BEST FITS YOUR VEHICLE AND YOU SELECTED FLOOR OPTION

RAIL MOUNTING BRACKETS ARE VEHICLE SPECIFIC AND ARE LABELED ACCORDINGLY. FORD TRANSIT BRACKETS ARE SHOWN FOR THE PURPOSES OF THIS INSTRUCTION

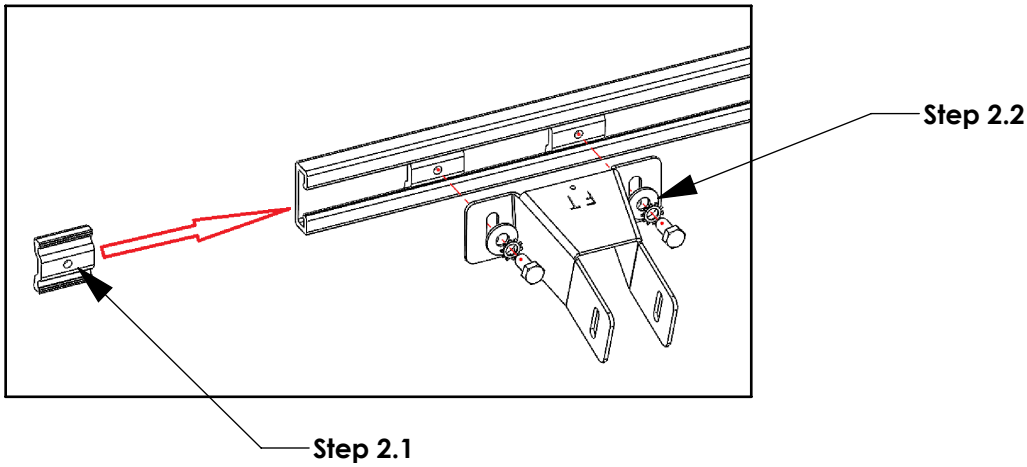

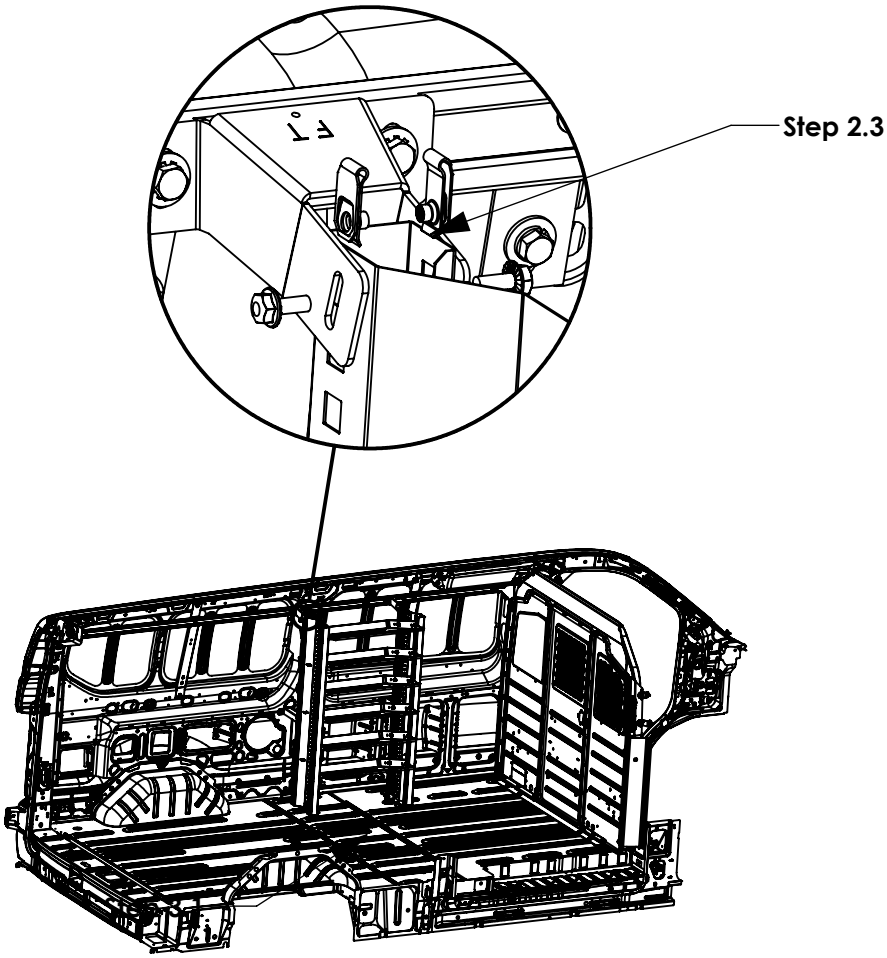

STEP 3 - ATTACH BELTLINE BRACKETS TO SHELVING UNIT AND INSTALL IN VEHICLE

Step 3.1
FULLY TIGHTEN (4)FAS0994 AND (4)FAS0018

7/16 WRENCH

Step 3.2
MARK AND DRILL 1/2" HOLE IN BELTLINE OF VEHICLE.

SET PLUSNUTS IN DRILLED HOLES.

LOOSELY ASSEMLBY UNTIL Step 5.1, (2)FAS0092, (2)FAS0098, (2)FAS0086, (2)FAS0091

1/2" DRILL BIT
PLUSNUT GUN
1/2" SOCKET
DRILL

NOTE:
REPEAR BOTH STEPS FOR FRONT OF SHELVING

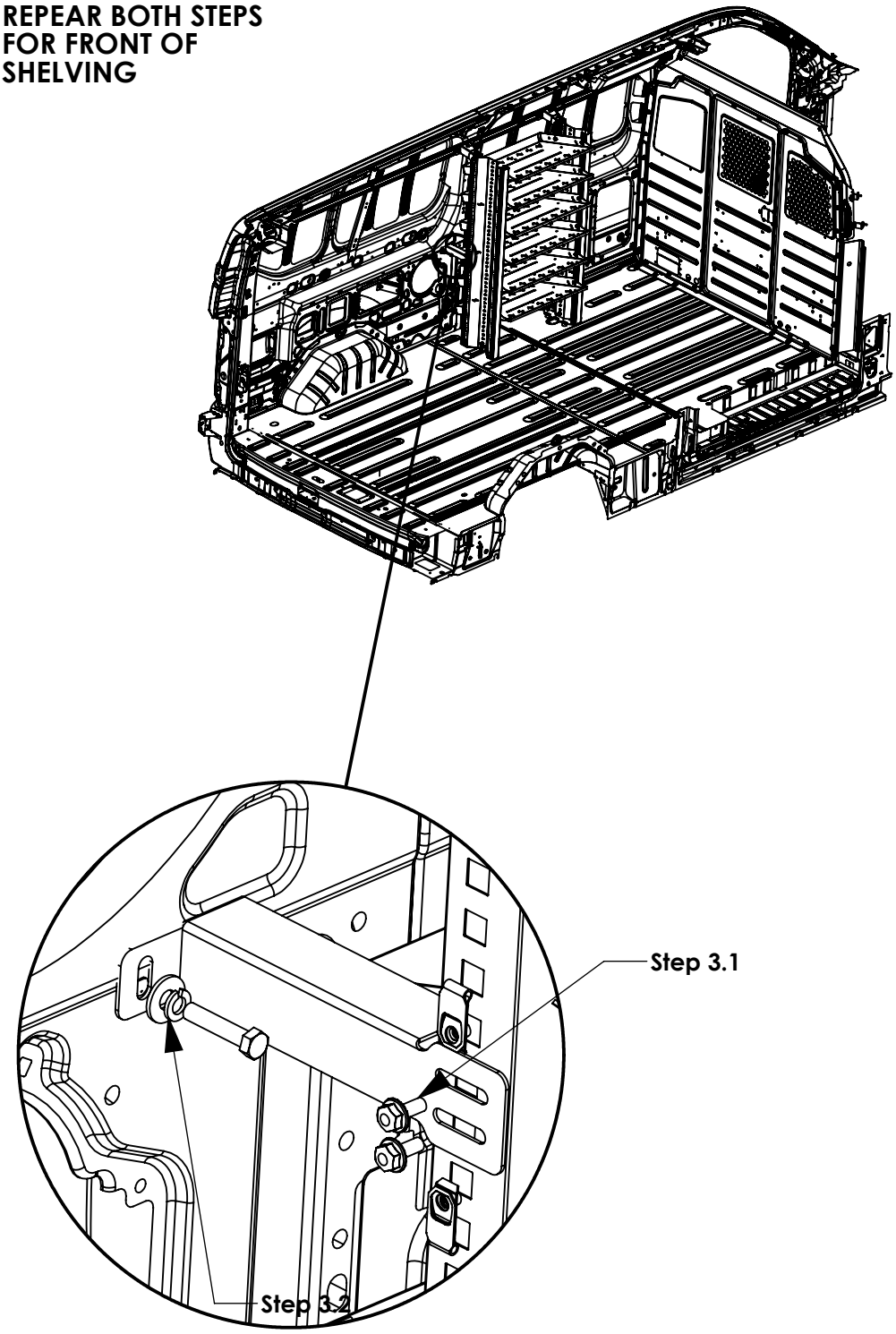

STEP 4 - MARK AND DRILL HOLES FOR FLOOR MOUNTING BRACKETS (GAS ONLY)

Step 4.1
PLACE BRAKCET AGAINST INSIDE FACE OF END PANEL.

USING SMALL SLOT, MARK HOLES IN FLOOR FOR END PANEL FLOOR MOUNTING BRACKET.

DRILL HOLE IN VEHICLE FLOOR. IF INSTALLING ON OEM OR AFTERMARKET FLOOR, USE HOLE SAW FOR FLOOR SPACER

(4) PLACES
1/2" DRILL BIT
1 3/16 HOLE SAW

Step 4.2
SET PLUSNUT IN DRILL HOLES FROM Step 4.1.

(4)FAS0091 END PANEL FLOOR MOUNTING BRACKET

SHOWN ON NEXT PAGE

Step 4.3
SLIGHTLY LIFT SHELVING UNIT AND PLACE BRAKET UNDER END PANEL. FULLY TIGHTEN (4)FAS0994, (4)FAS0018, (2)FAS0924 & (2)FAS0055

7/16 SOCKET

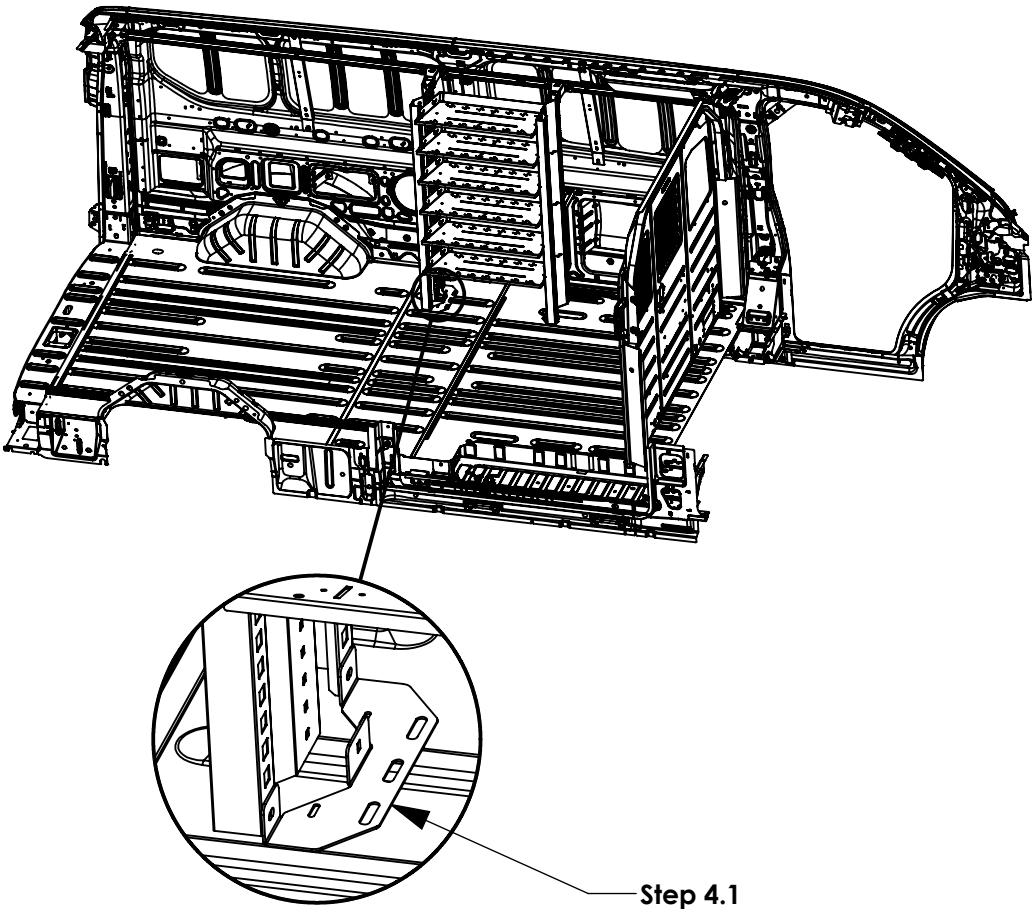

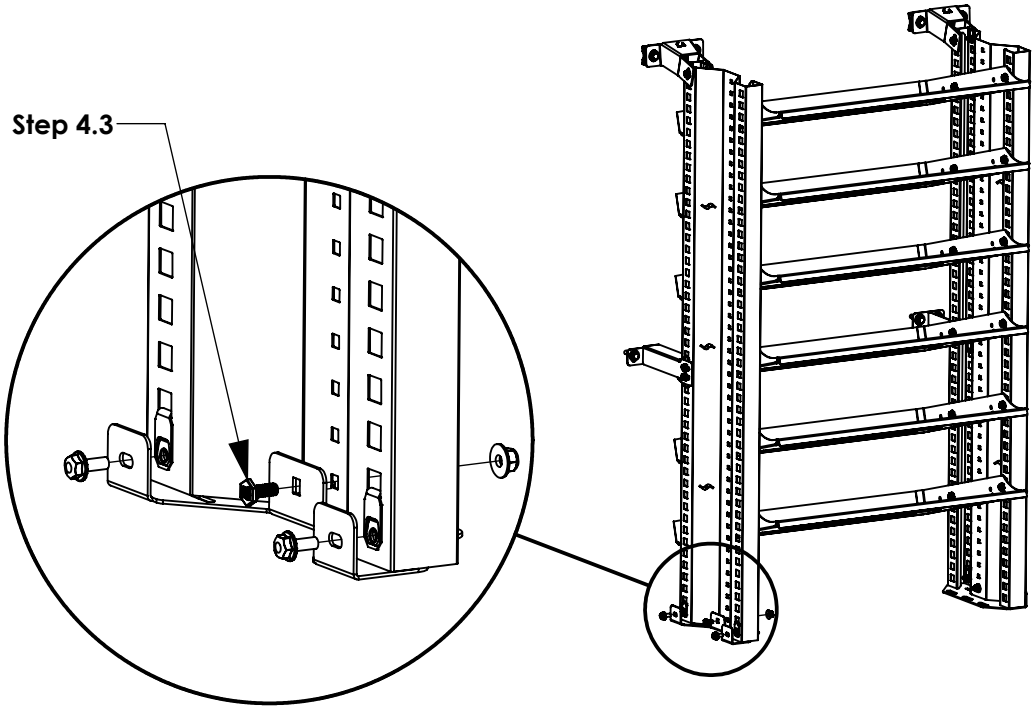

NOTE: VEHICLE HIDDEN FOR CLARITY

STEP 5 - ATTACH SHELVING UNIT TO VEHICLE FLOOR

Step 5.1
FULLY TIGHTEN (4)FAS0092, (4)FAS0098, (4)FAS0086, (4)FAS0091

1/2" SOCKET

IF INSTALLING ON AN OEM OR AFTERMARKET FLOOR, OR IF HOLE IS IN RIB OF VEHICLE, USE 03927-1 OR 03927-2 TO CREATE LEVEL MOUNTING SURFACE

Step 5.2
FULLY TIGHTEN BOLTS FROM Steps 2.2, 2.3, & 3.2

NOTE: VEHICLE HIDDEN FOR CLARITY

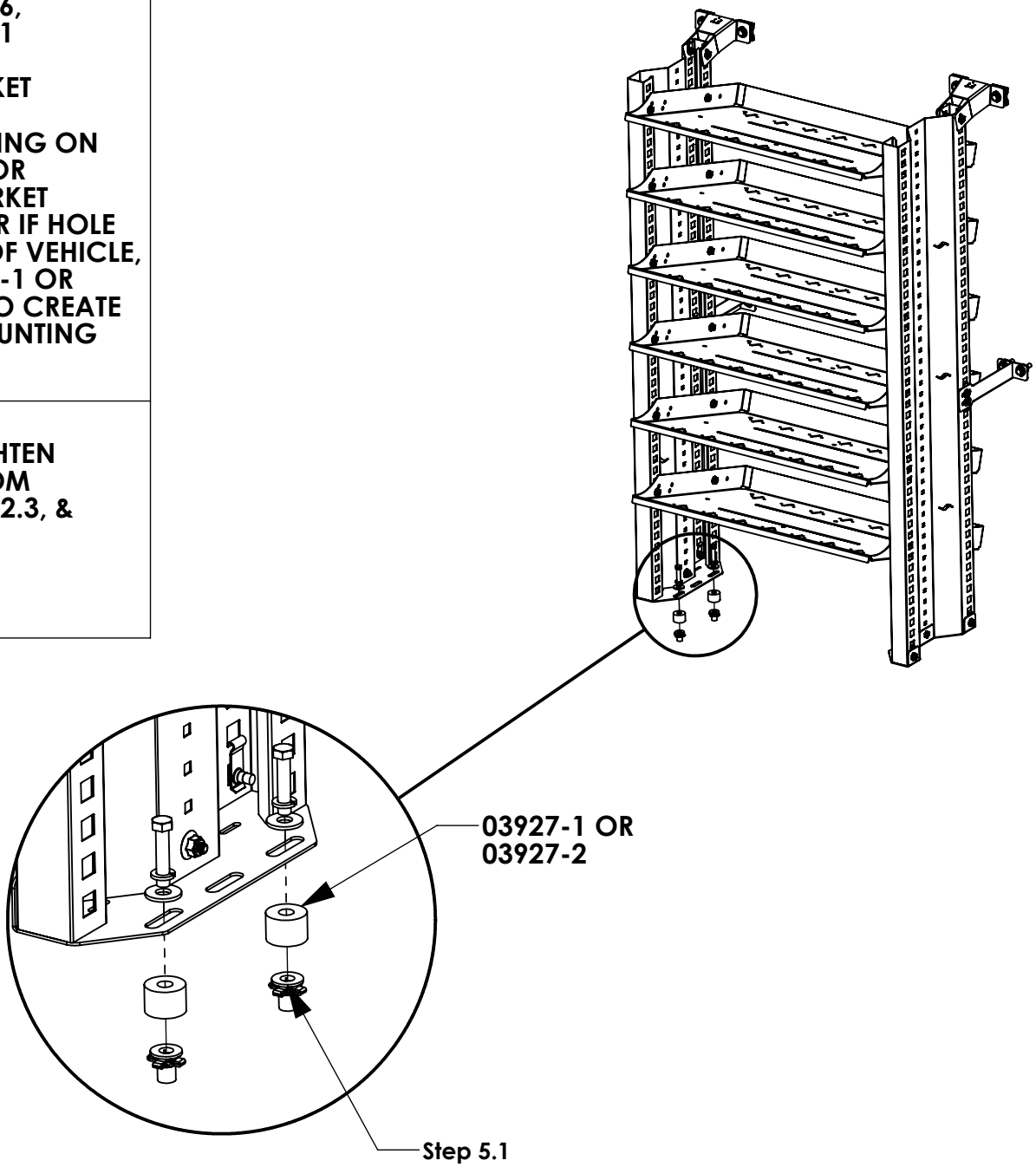

STEP 6 - ATTACH CASE HOLDER SHELVING ADD ON UNIT TO VEHICLE FLOOR

Step 6.1
FOLLOW Step 1.1 & 1.2 TO ASSEMLBY CASE HOLDER SHELVING.

IF NEEDED SLIDE SHELVING TO ANOTHER LOCATION TO ALLOW FOR ADD-ON TO BE ADDED INSIDE VEHICLE BAY.

Step 6.2
PLACE CASE HOLDER ADD ON NEXT TO SHELVING UNIT. PLACE FAS0994 INTO END PANEL LIKE SHOWN IN Step 1.2, AND FULLY TIGHTEN FAS0018

1/2" WRENCH

Step 6.3
FOLLOW Step 2 TO FINISH BUILD OF ADDING ADD-ON TO SHELVING.
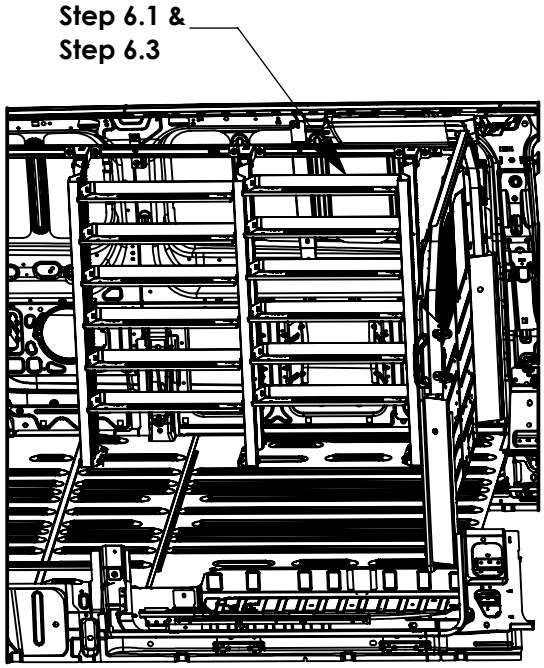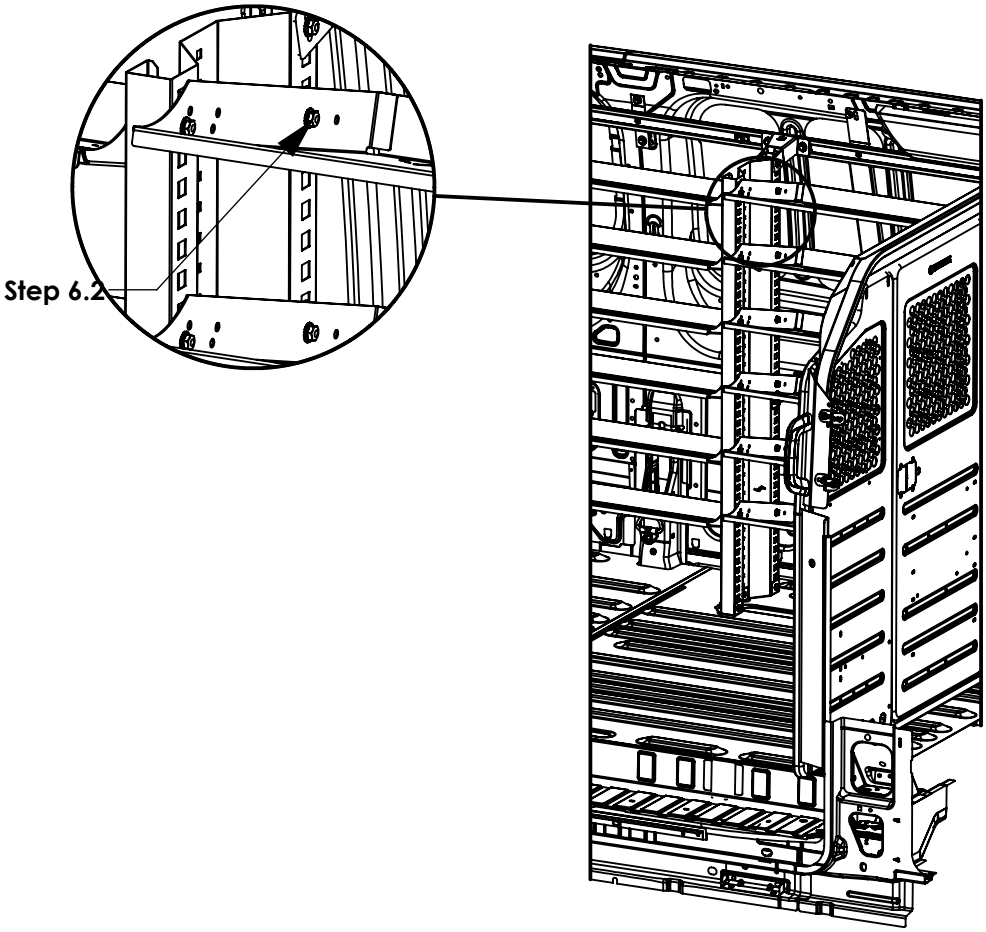
FULLY TIGHTEN ALL FASTENERS