END CAP KIT, 2T, 14D, A, 4

PRODUCT WEIGHT

12.72 LBS

WIDTH X DEPTH X HEIGHT

10" x 3.125 TOP END CAP
14" X 3.25" LOWER END CAPS

CAPACITY

N/A

COLOR

ASC BLUE

CATALOG NUMBER

AECK2T14A4

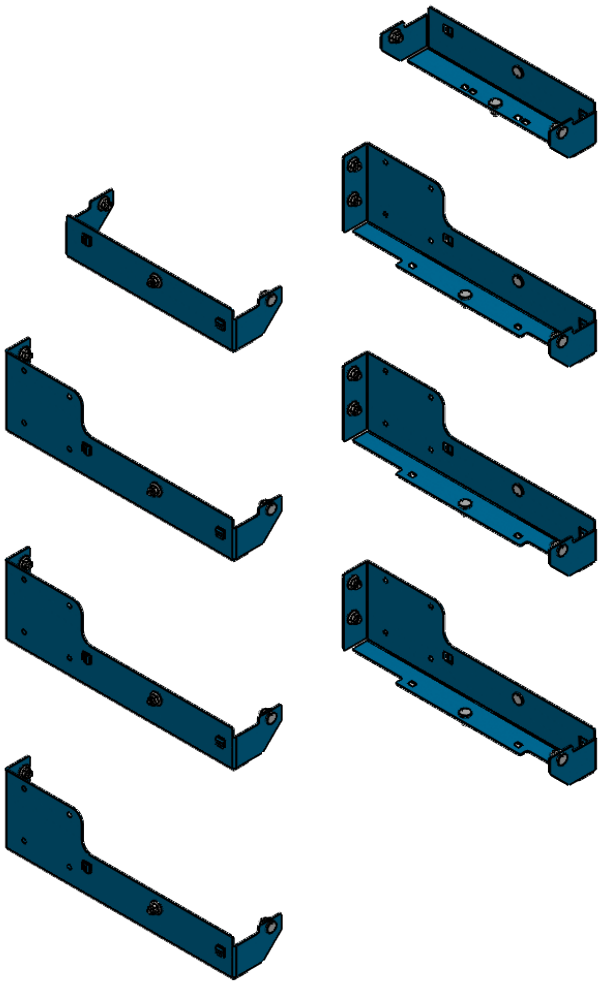

PRODUCT FEATURES

This kit contains end caps that connect the shelves to the end panels. The end caps clip into the square cut-outs on the end panels and are secured using a single set of fasteners. The end caps can be mounted to the end panels at any height as long as the vehicle body allows. This kit contains two sets (left and right) of 14" end caps and one set of 10" end caps.

SEE PAGE 2 FOR APPLICATION NOTES, ACCESSORIES AND OTHER PRODUCTS THAT WORK WITH THIS UNIT.

END CAP KIT, 2T, 14D, A, 4

CATALOG NUMBER **AECK2T14A4**

PRODUCT APPLICATION

This kit contains 4 sets of end caps, which are typical for use with 63" end panels. However, this kit is compatible with any height of end panel.

ACCESSORIES THAT WILL WORK WITH THIS PRODUCT

CATALOG NUMBER	*DESCRIPTION (smart)*
AEPK1049	END PANEL KIT, 10X49, G
AEPK1063	END PANEL KIT, 10X63, G
AEPK1068	END PANEL KIT, 10X68, G
AEPK1068-PM	END PANEL KIT, 10X68, PM, G
ASFK2T1424G4	SHELF KIT, 2T, 14X24, G, 4
ASFK2T1430G4	SHELF KIT, 2T, 14X30, G, 4
ASFK2T1436G4	SHELF KIT, 2T, 14X36, G, 4
ASFK2T1442G4	SHELF KIT, 2T, 14X42, G, 4
ASFK2T1448G4	SHELF KIT, 2T, 14X48, G, 4
ASFK2T1454G4	SHELF KIT, 2T, 14X54, G, 4
ASFK2T1460G4	SHELF KIT, 2T, 14X60, G, 4
ASFK2T1466G4	SHELF KIT, 2T, 14X66, G, 4
ASFK2T1472G4	SHELF KIT, 2T, 14X72, G, 4

The information contained in this document is the sole property of ADRIAN STEEL COMPANY. ADRIAN STEEL COMPANY retains the right to modify and/or change the product of its design at any time with prior notification.

END PANEL KIT, 10X63, G

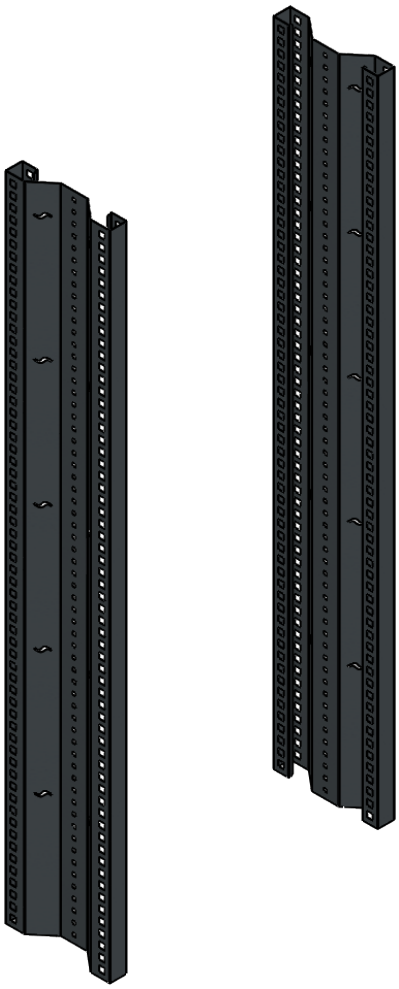

PRODUCT WEIGHT

21.03 LBS

WIDTH X DEPTH X HEIGHT

SEE KIT

CAPACITY

N/A

COLOR

GRAY

CATALOG NUMBER

AEPK1063G

PRODUCT FEATURES

This kit contains two 63" tall end panels. The end panels have square holes that are used to mount the end caps to support the shelves. These holes are patterned at 1" increments to all for adjustment of the end caps and shelves. Use the brackets included in the mounting bracket kit to attach the end panels to the vehicle. The standard width of 10" is common between all vehicle platforms and shelf depths due to the cantilevered nature of the shelves.

SEE PAGE 2 FOR APPLICATION NOTES, ACCESSORIES AND OTHER PRODUCTS THAT WORK WITH THIS UNIT.

END PANEL KIT, 10X63, G

CATALOG NUMBER **AEPK1063G**

PRODUCT APPLICATION

This end panel is designed to be installed in Transit Med Roof, Ram Promaster Low Roof, and Mercedes Sprinter low Roof.

ACCESSORIES THAT WILL WORK WITH THIS PRODUCT

CATALOG NUMBER	*DESCRIPTION (smart)*
AEPMBKFTA	END PANEL MOUNTING BRACKET KIT, FT, A
AEPMBKGMA	END PANEL MOUNTING BRACKET KIT, GM, A
AEPMBKPMA	END PANEL MOUNTING BRACKET KIT, PM, A
AEPMBKSPA	END PANEL MOUNTING BRACKET KIT, SP, A
AECK2T143	END CAPS KIT, 2T, 14D, A, 3
AECK2T144	END CAPS KIT, 2T, 14D, A, 4
AECK2T145	END CAPS KIT, 2T, 14D, A, 5
AECK2T163	END CAPS KIT, 2T, 16D, A, 3
AECK2T164	END CAPS KIT, 2T, 16D, A, 3
AECK2T165	END CAPS KIT, 2T, 16D, A, 3

The information contained in this document is the sole property of ADRIAN STEEL COMPANY. ADRIAN STEEL COMPANY retains the right to modify and/or change the product of its design at any time with prior notification.

THIS DOCUMENT LISTS THE PRODUCT STRUCTURE OF THE VARIOUS MODULAR KITS TO ASSEMBLE YOUR SHELVING UNIT OF THE

ADRIAN SHELVING PRODUCT LINE

TO VIEW INSTRUCTIONS OF HOW TO ASSEMBLE YOUR SHELVING UNIT, PLEASE REFER TO PART#: INS-ASHELVING

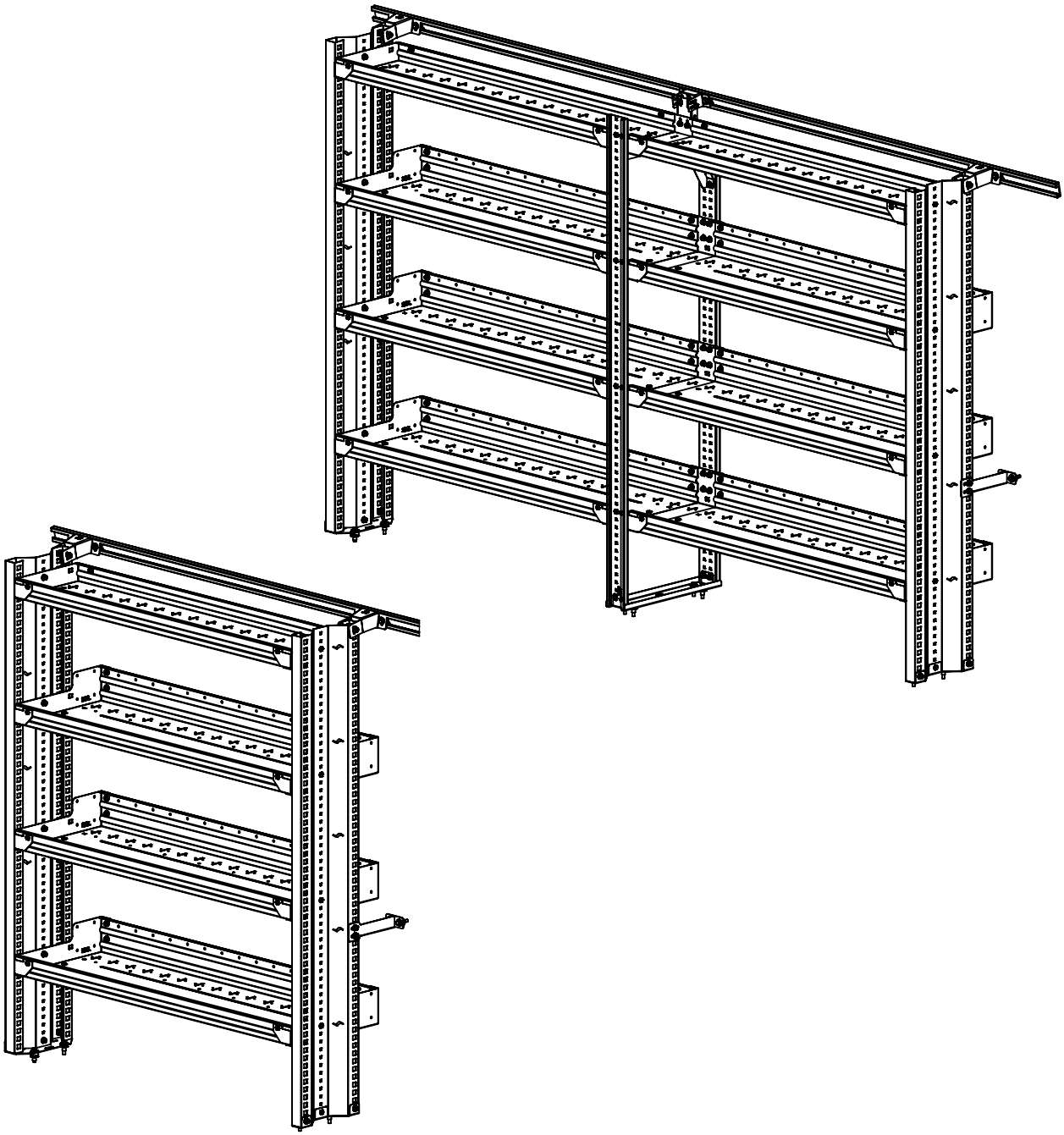

END PANEL KIT PRODUCT STRUCTURES

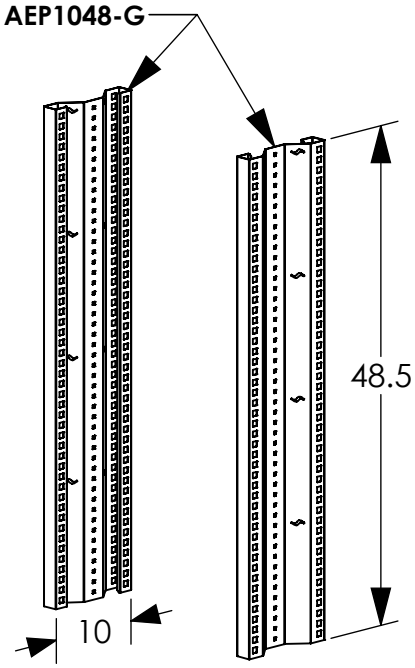

AEPK1048G

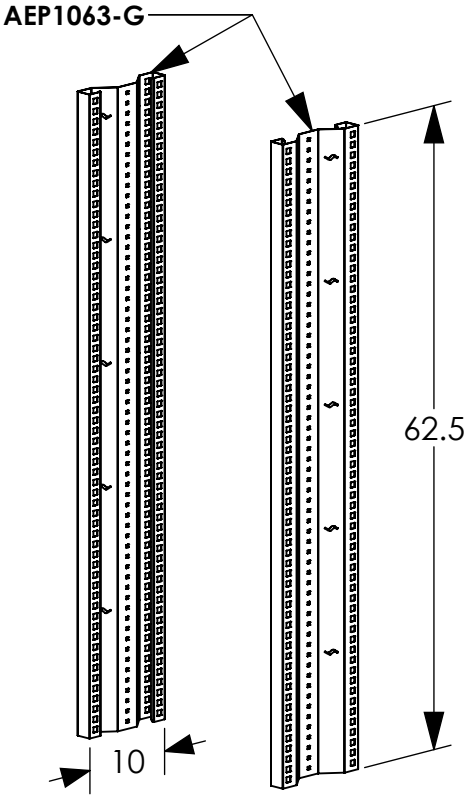

AEPK1063G

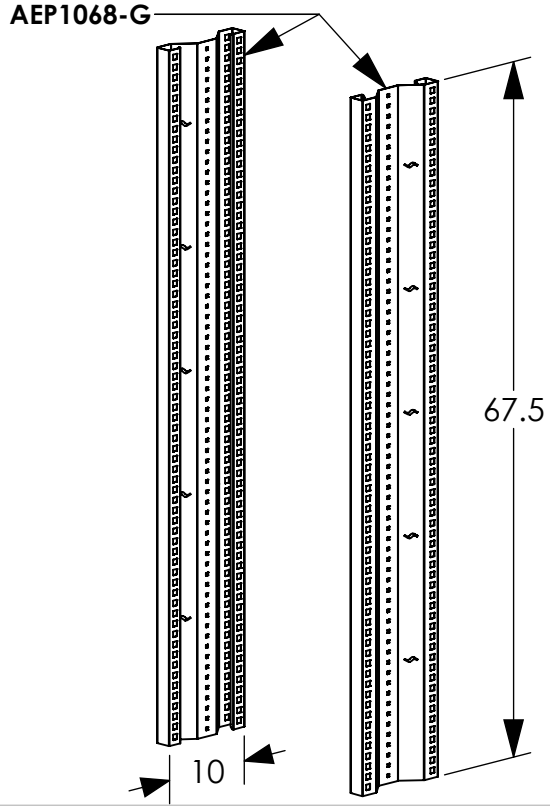

AEPK1068G

14 INCH END CAP KIT PRODUCT STRUCTURES

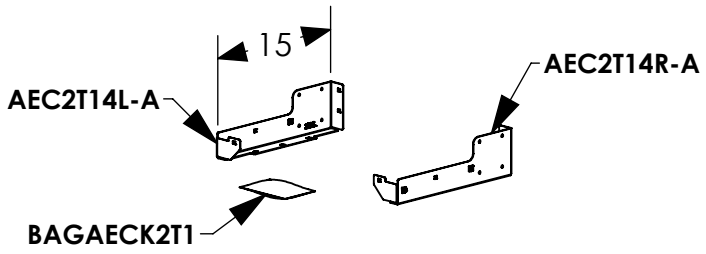

AECK2T14A1

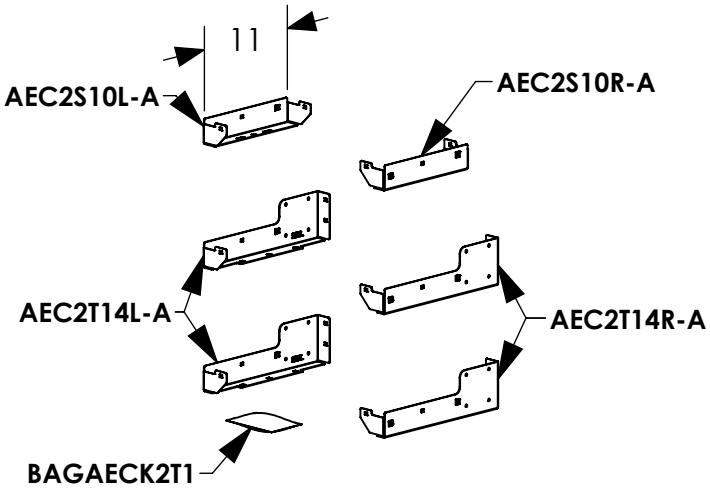

AECK2T14A3

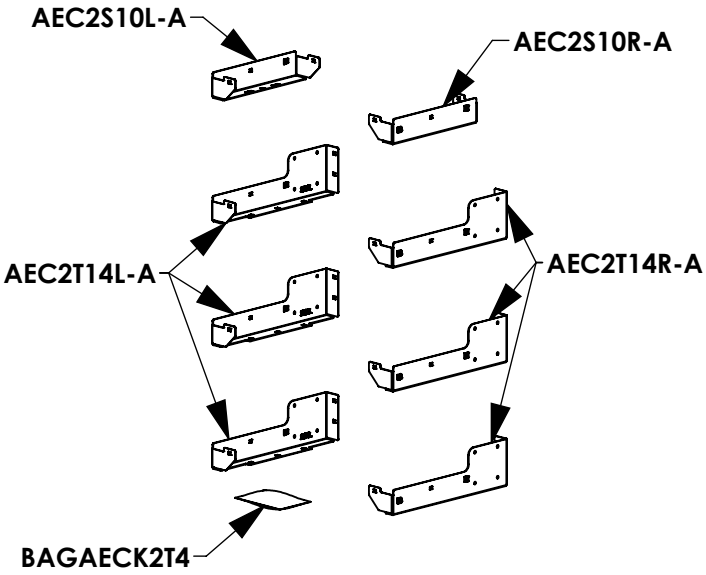

AECK2T14A4

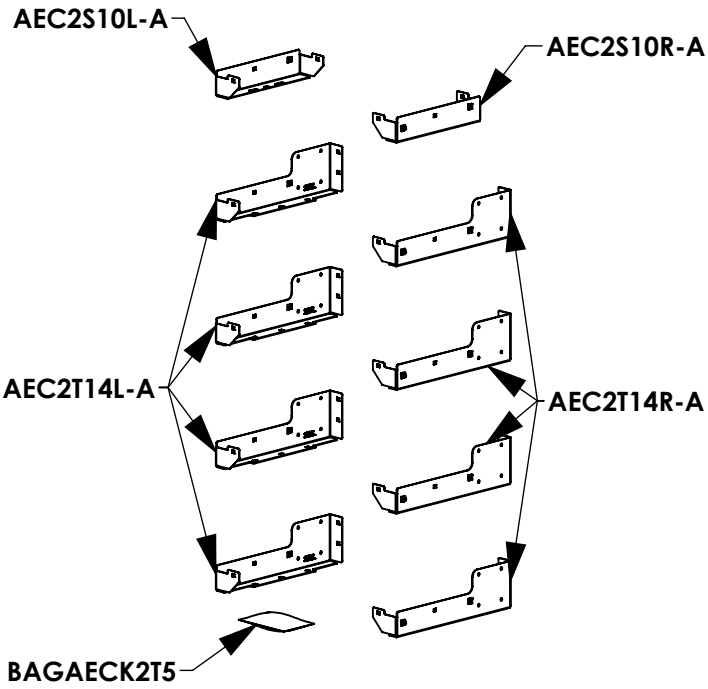

AECK2T14A5

16 INCH END CAP KIT PRODUCT STRUCTURES

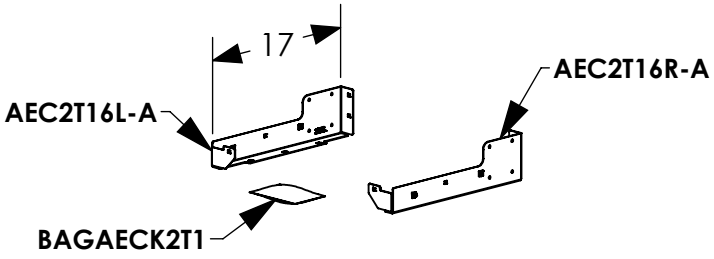

AECK2T16A1

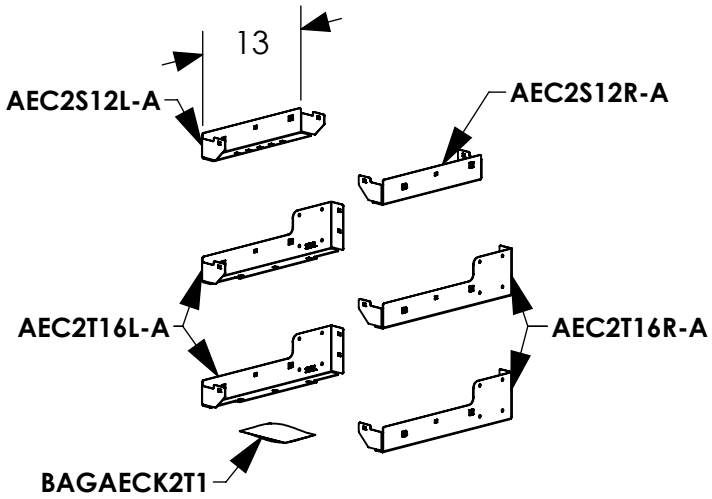

AECK2T16A3

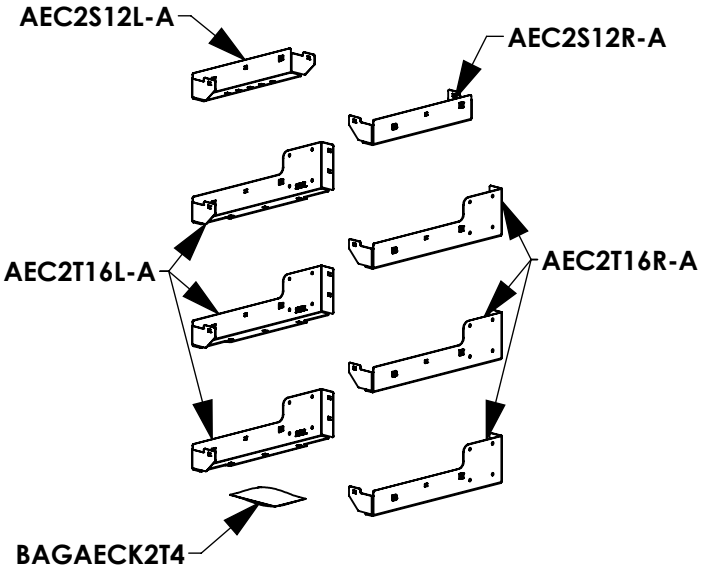

AECK2T16A4

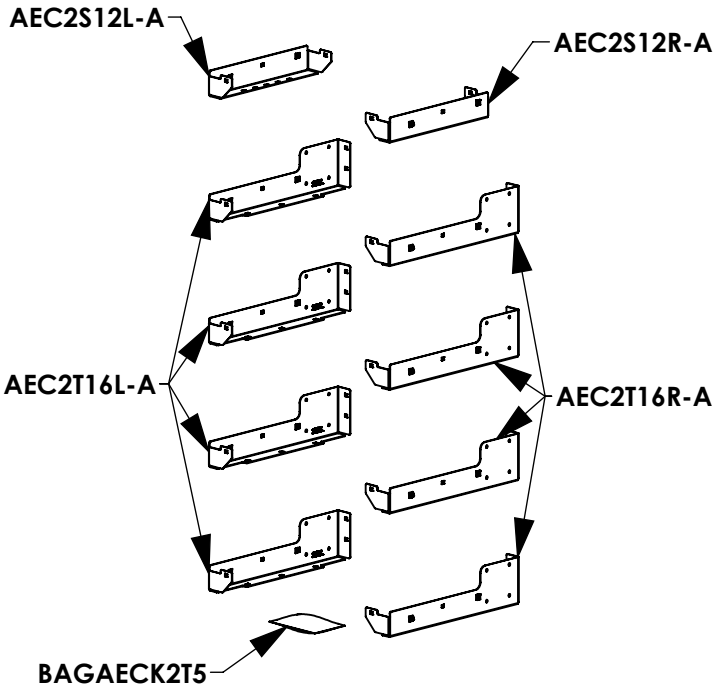

AECK2T16A5

18 INCH END CAP KIT PRODUCT STRUCTURES

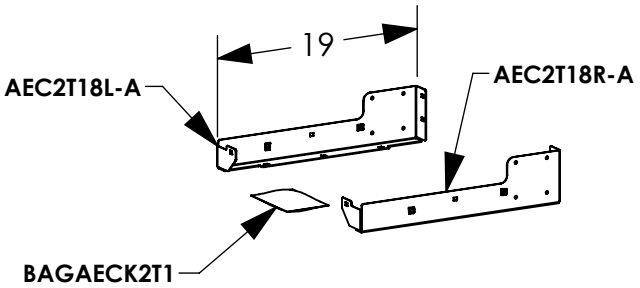

AECK2T18A1

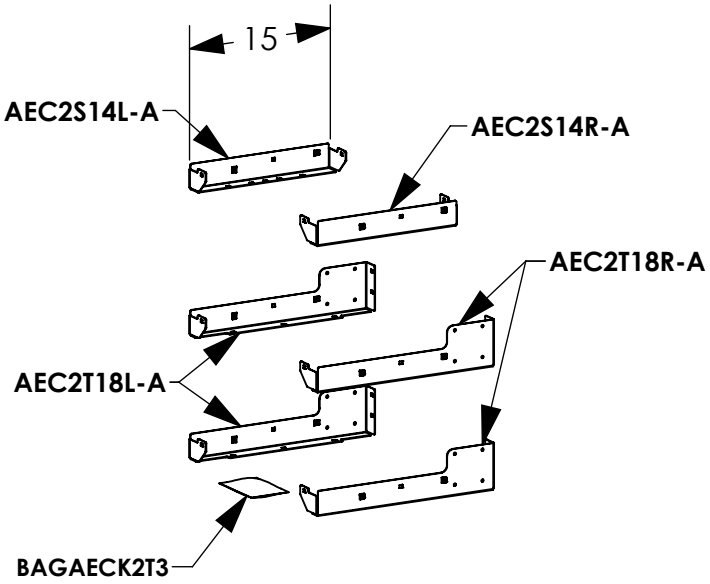

AECK2T18A3

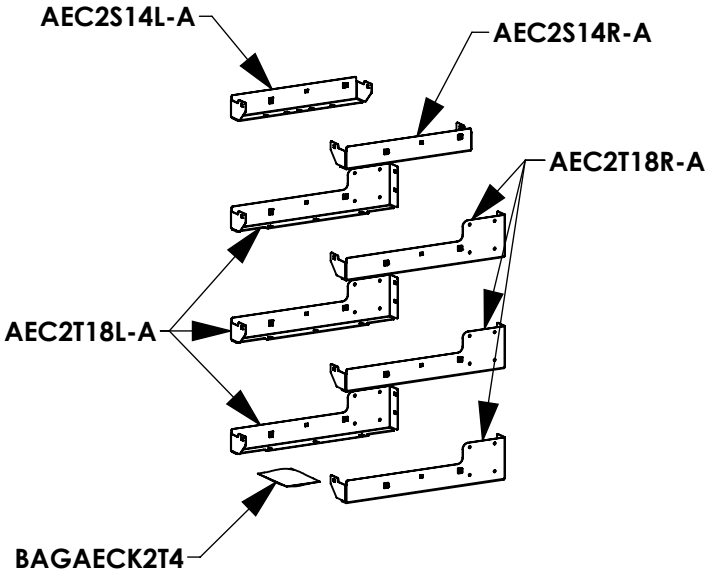

AECK2T18A4

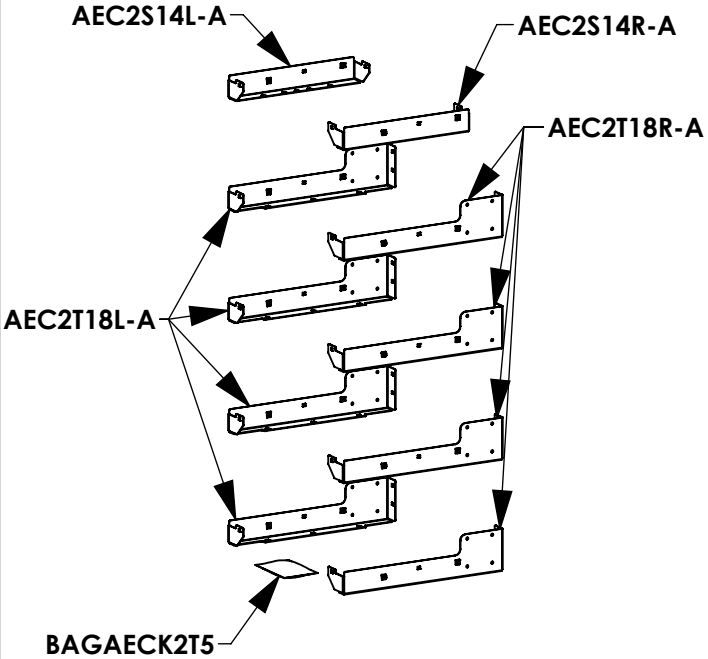

AECK2T18A5

14 INCH DEEP SHELF KIT PRODUCT STRUCTURES

NOTE: SHELF LENGTHS (NOTATED AS ##) RANGE FROM 24" - 72", AT 6" INCREMENTS
EXAMPLE SHELF PART NUMBER: ASF2T1448-G
EXAMPLE SHELF KIT PART NUMBER: ASFK2T1448G1

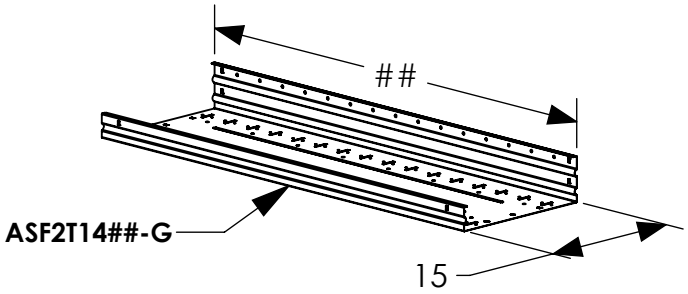

ASFK2T14##G1

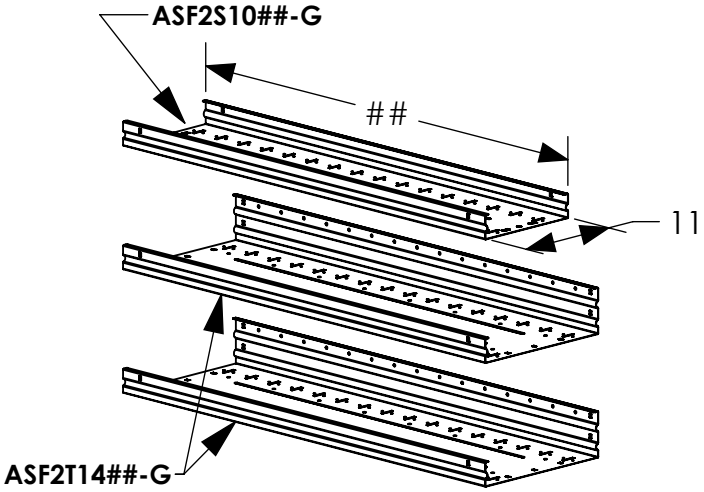

ASFK2T14##G3

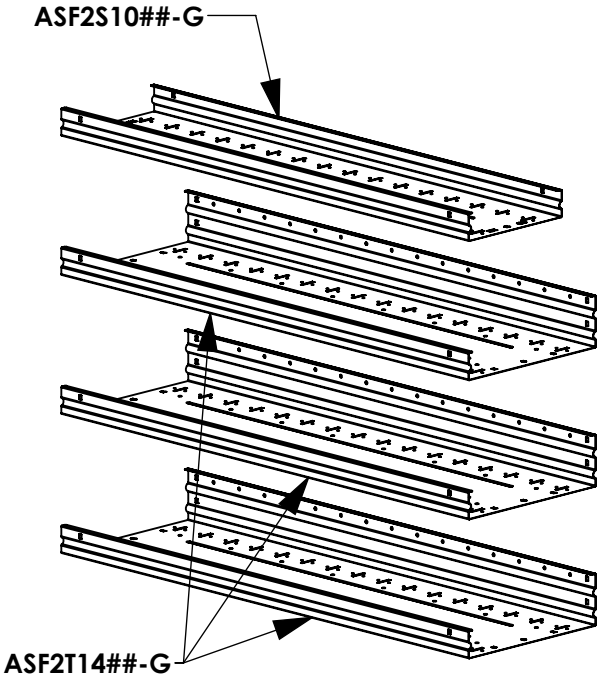

ASFK2T14##G4

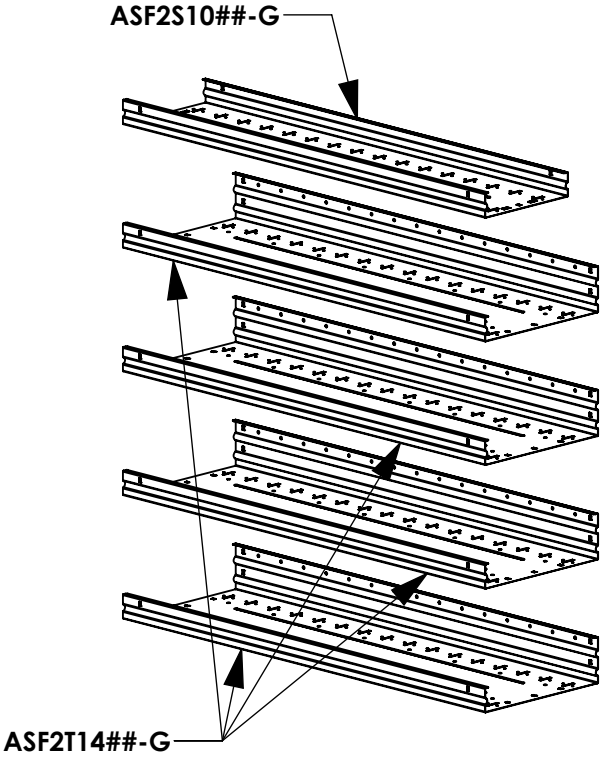

ASFK2T14##G5

16 INCH DEEP SHELF KIT PRODUCT STRUCTURES

NOTE: SHELF LENGTHS (NOTATED AS ##) RANGE FROM 24" - 72", AT 6" INCREMENTS
EXAMPLE SHELF PART NUMBER: ASF2T1648-G
EXAMPLE SHELF KIT PART NUMBER: ASFK2T1648G1

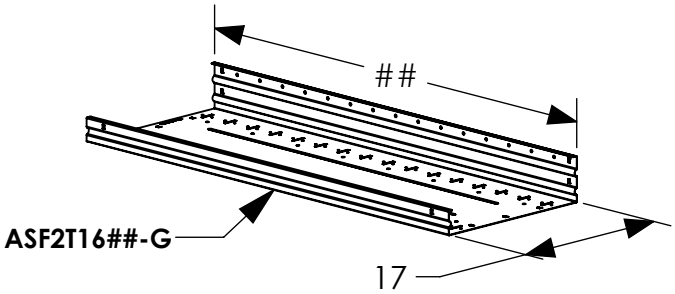

ASFK2T16##G1

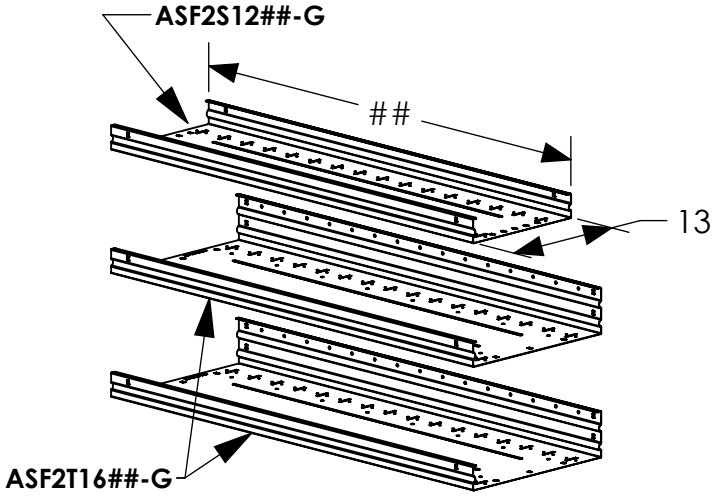

ASFK2T16##G3

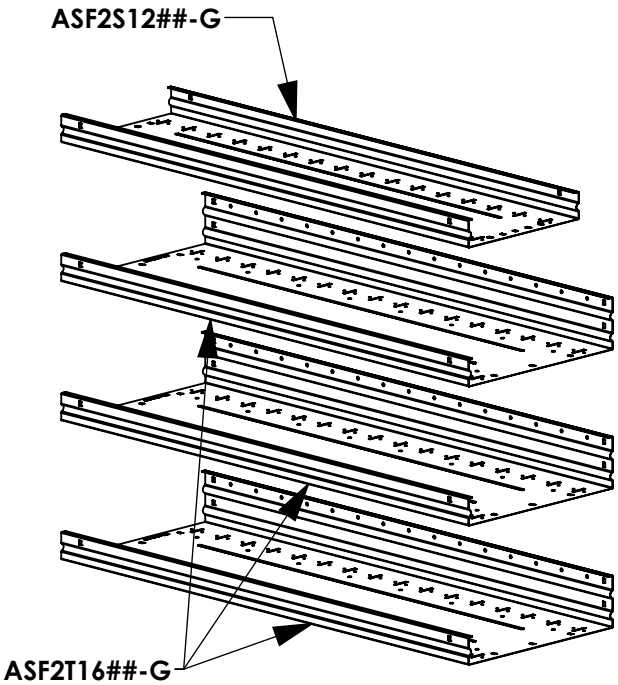

ASFK2T16##G4

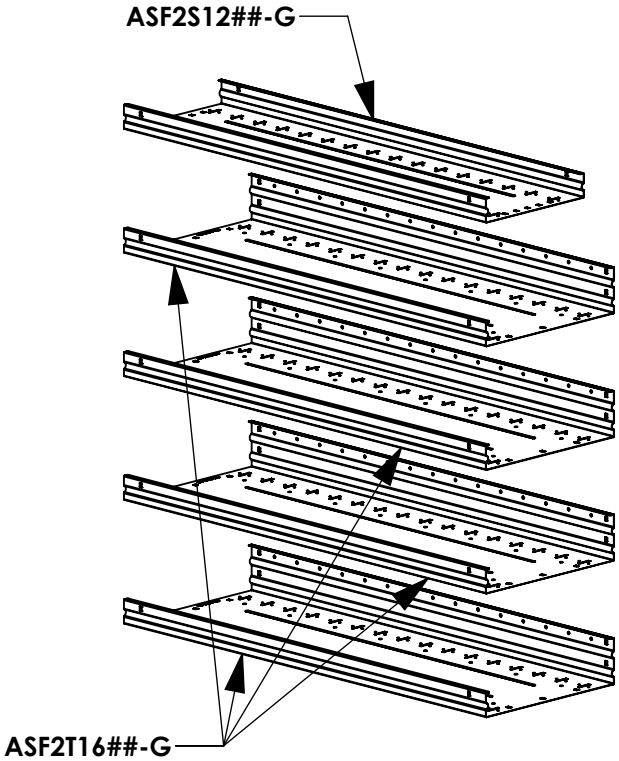

ASFK2T16##G5

16 INCH DEEP SHELF KIT PRODUCT STRUCTURES

NOTE: SHELF LENGTHS (NOTATED AS ##) RANGE FROM 24" - 72", AT 6" INCREMENTS
EXAMPLE SHELF PART NUMBER: ASF2T1848-G
EXAMPLE SHELF KIT PART NUMBER: ASFK2T1848G1

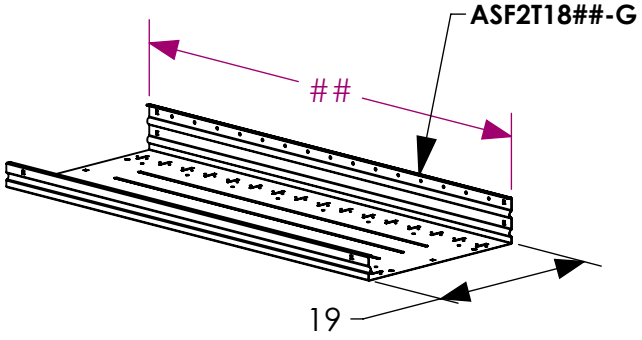

ASFK2T18##G1

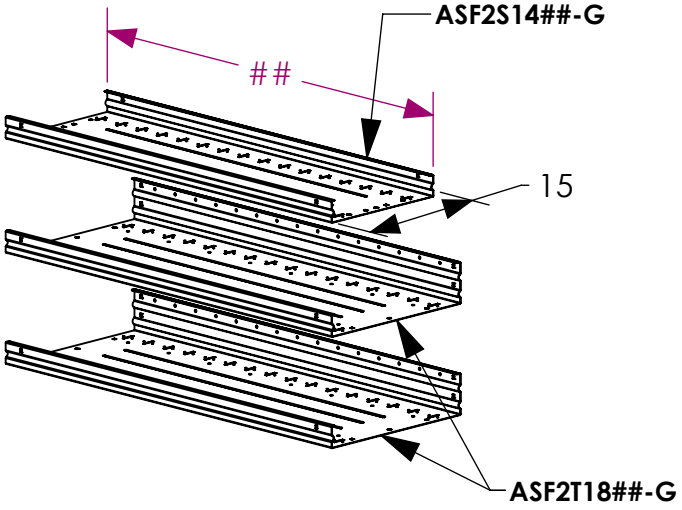

ASFK2T18##G3

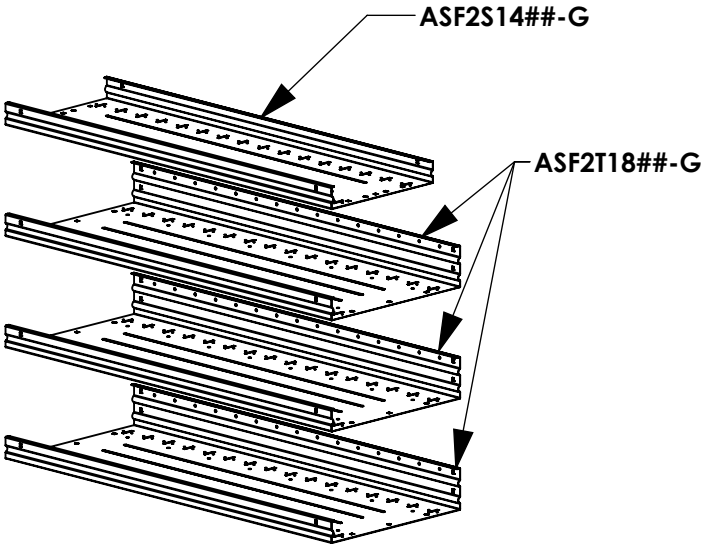

ASFK2T18##G4

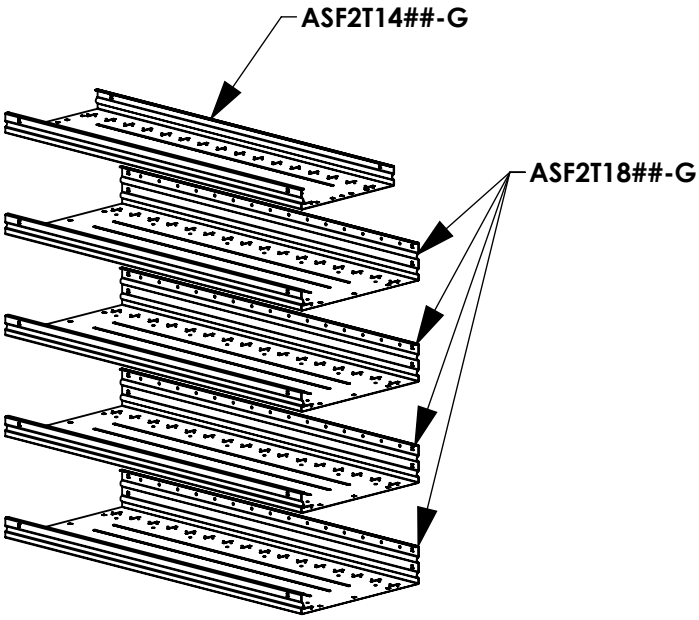

ASFK2T18##G5

14 IN DEEP CENTER SUPPORT KIT PRODUCT STRUCTURES

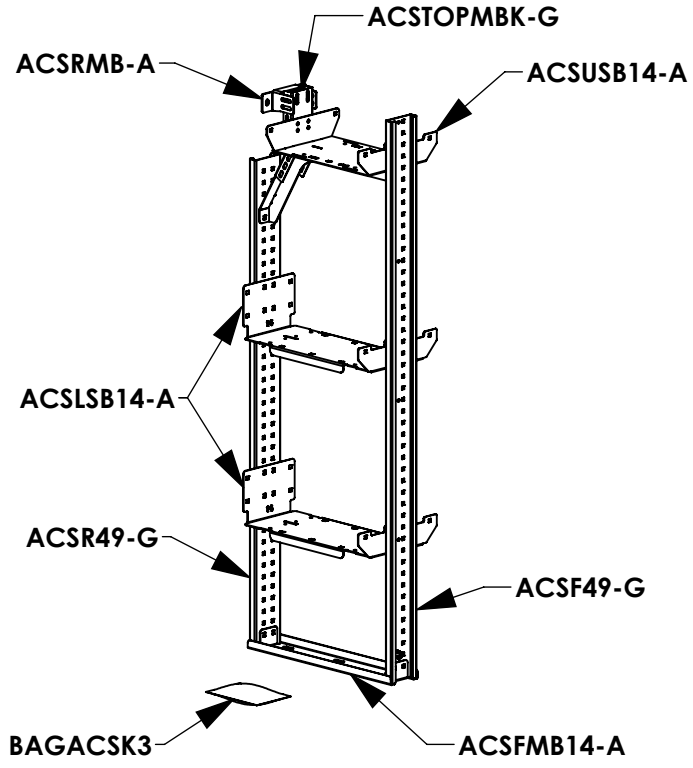

ACSK1449A3

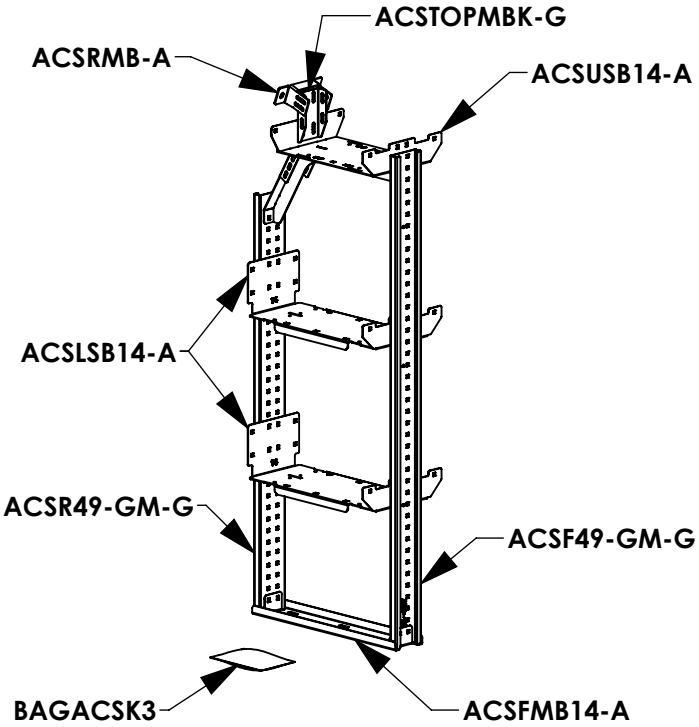

ACSK1449-GMA3

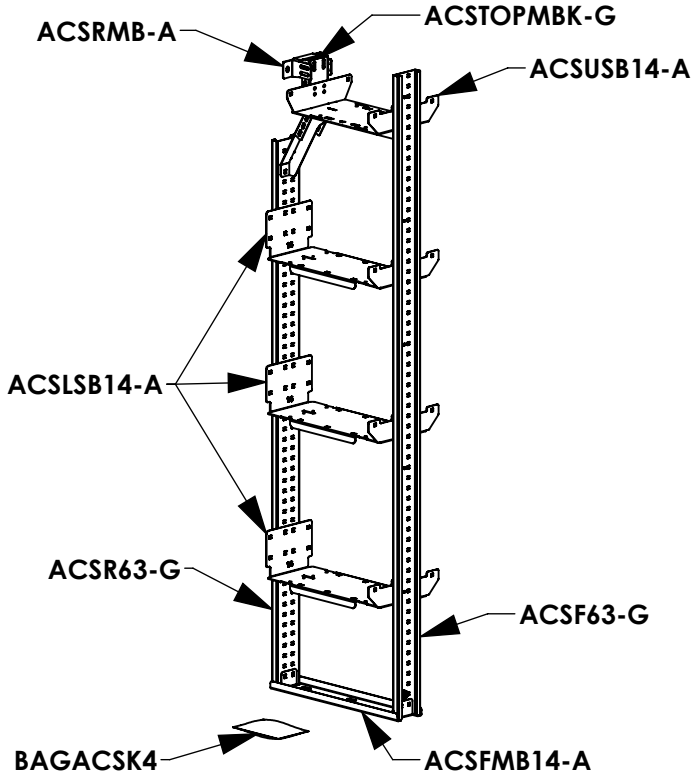

ACSK1463A4

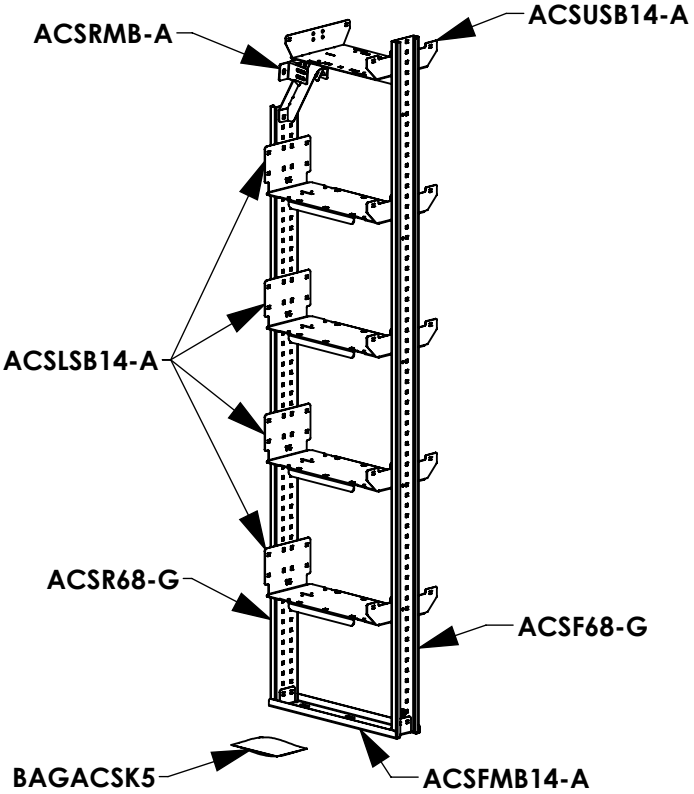

ACSK1468A5

16 IN DEEP CENTER SUPPORT KIT PRODUCT STRUCTURES

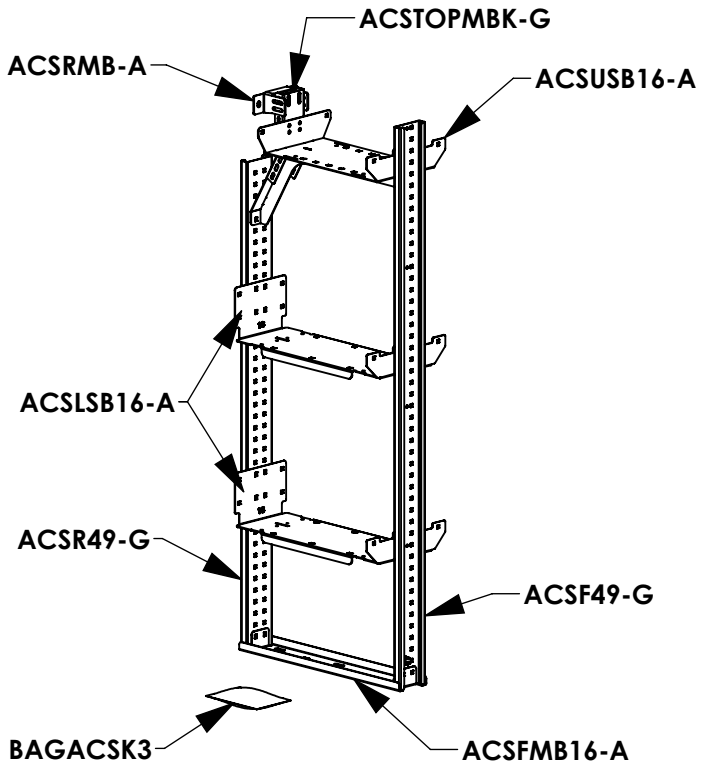

ACSK1649A3

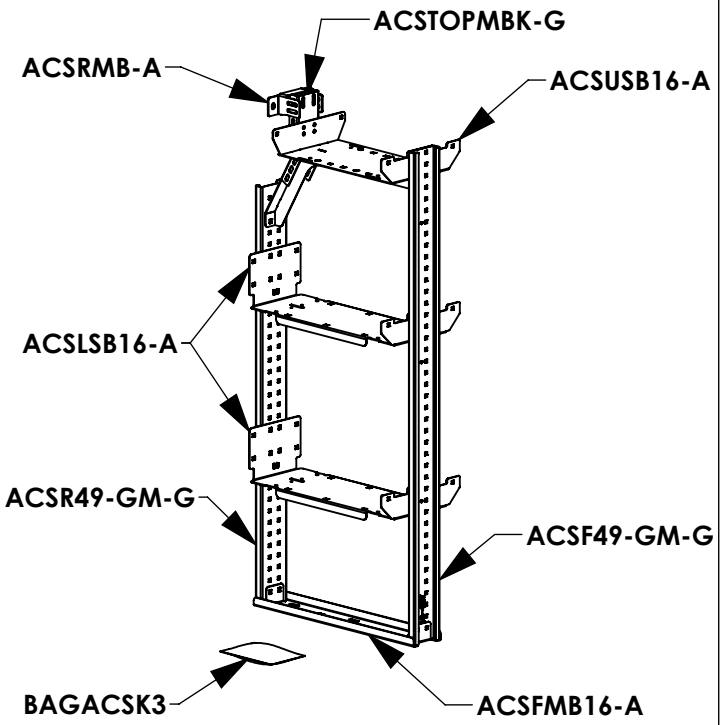

ACSK1649-GMA3

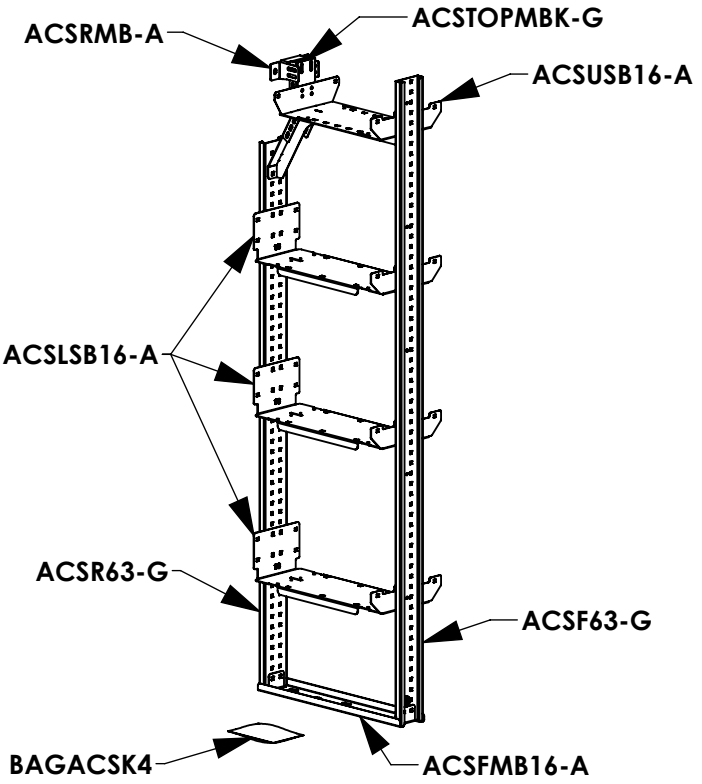

ACSK1663A4

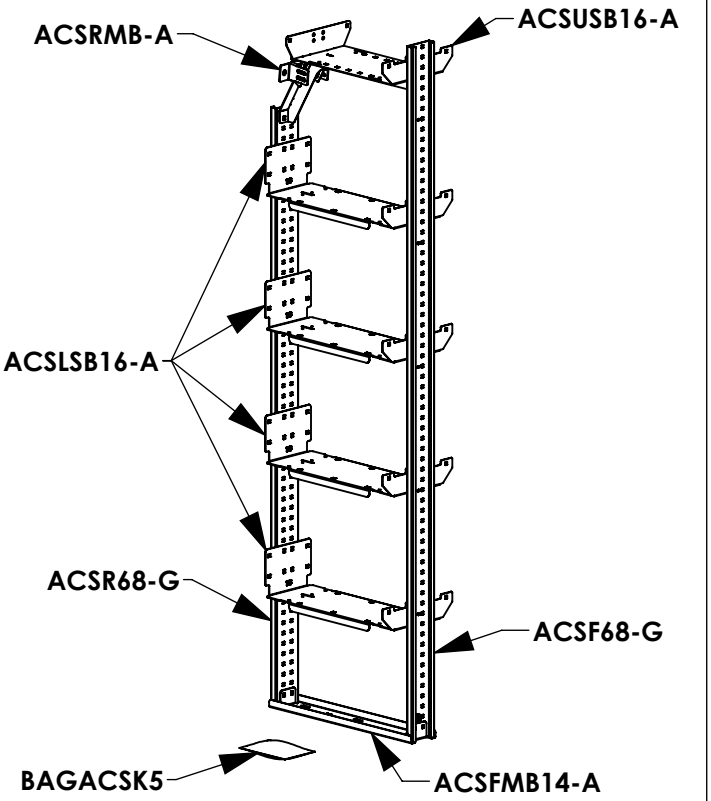

ACSK1668A5

18 IN DEEP CENTER SUPPORT KIT PRODUCT STRUCTURES

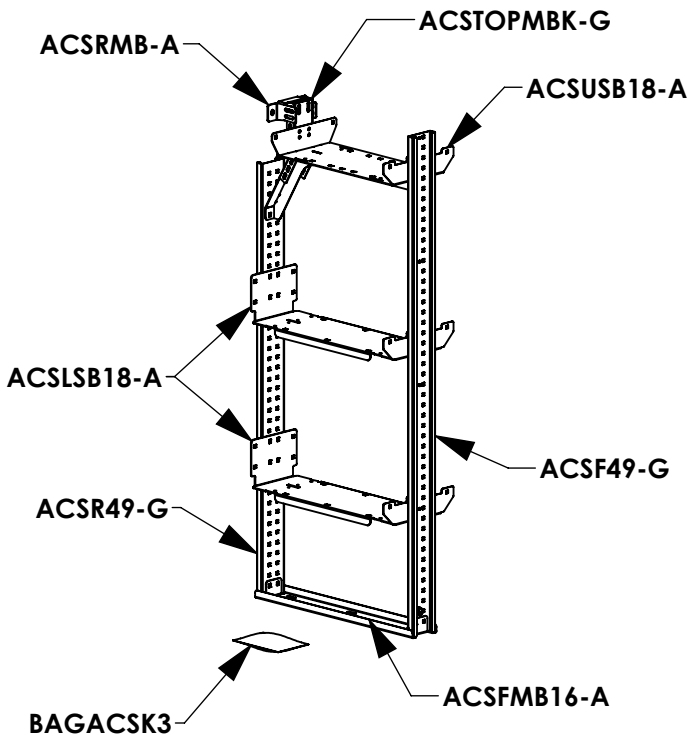

ACSK1849A3

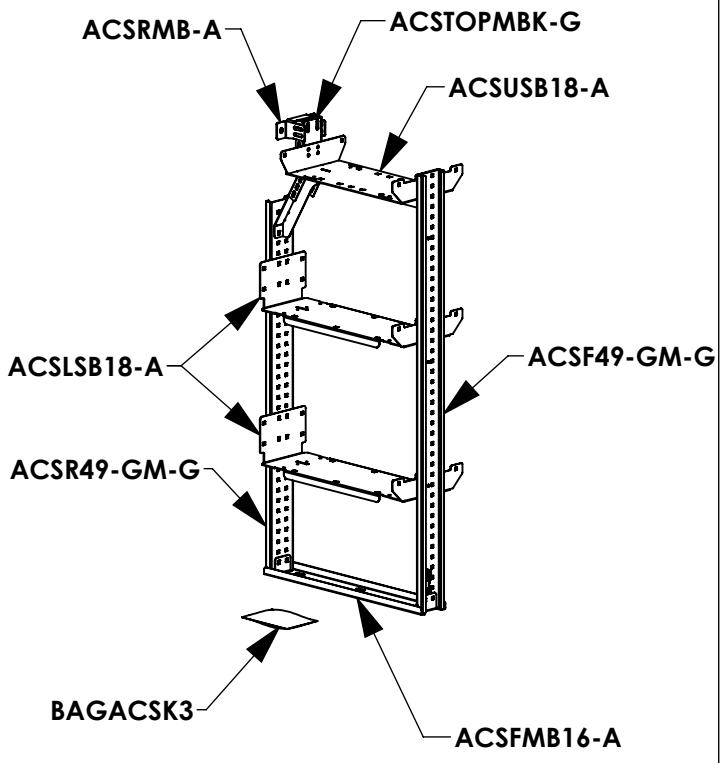

ACSK1849-GMA3

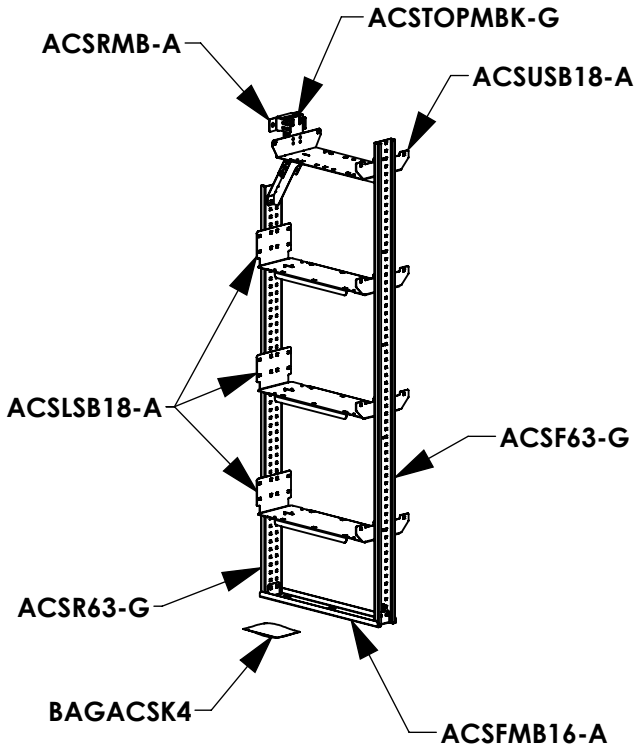

ACSK1863A4

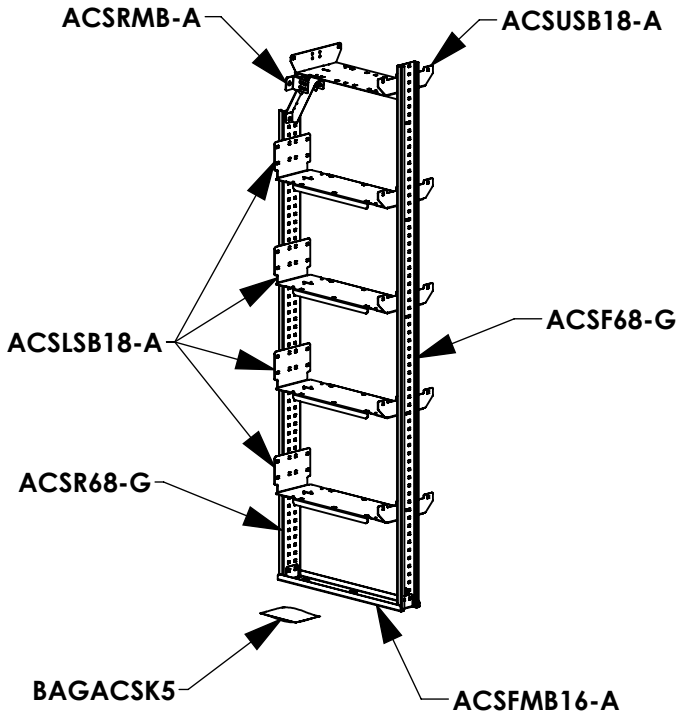

ACSK1868A5

SINGLE CENTER SUPPORT KITS AND DIMENSIONS

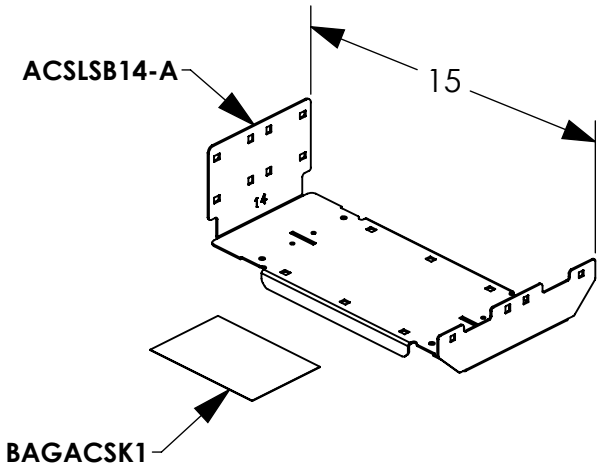

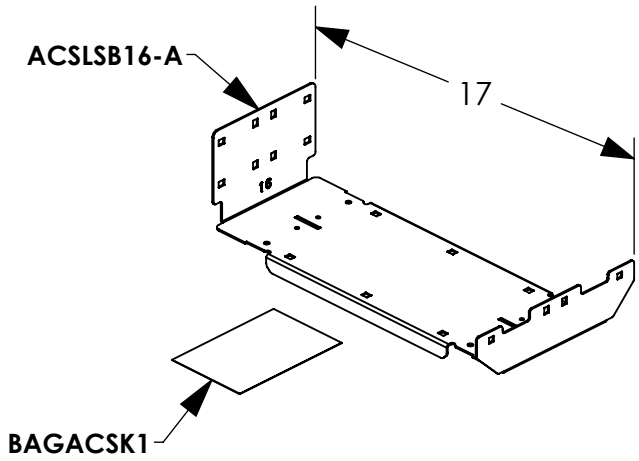

ACSK14A1

ACSK16A1

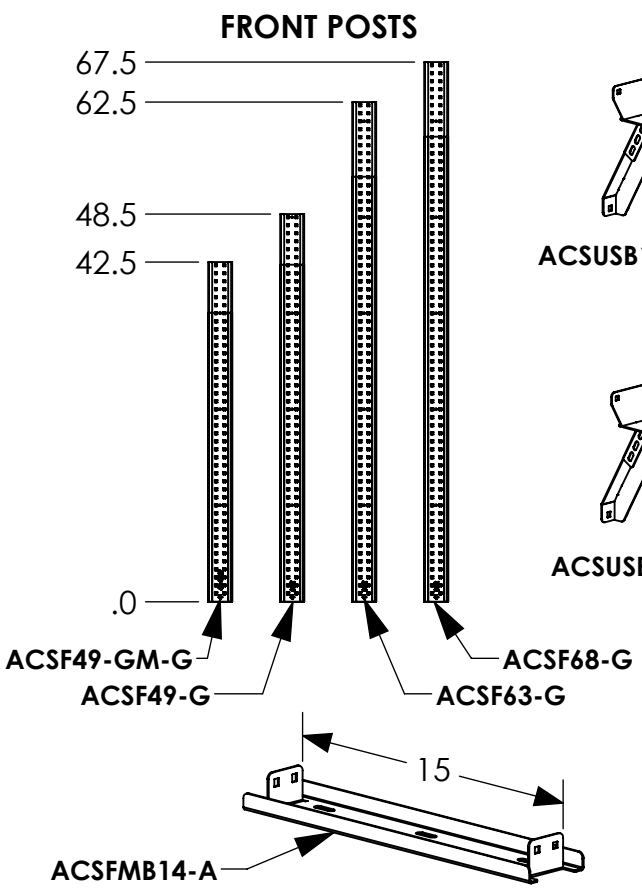

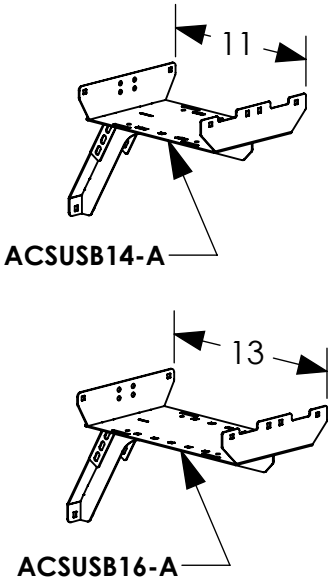

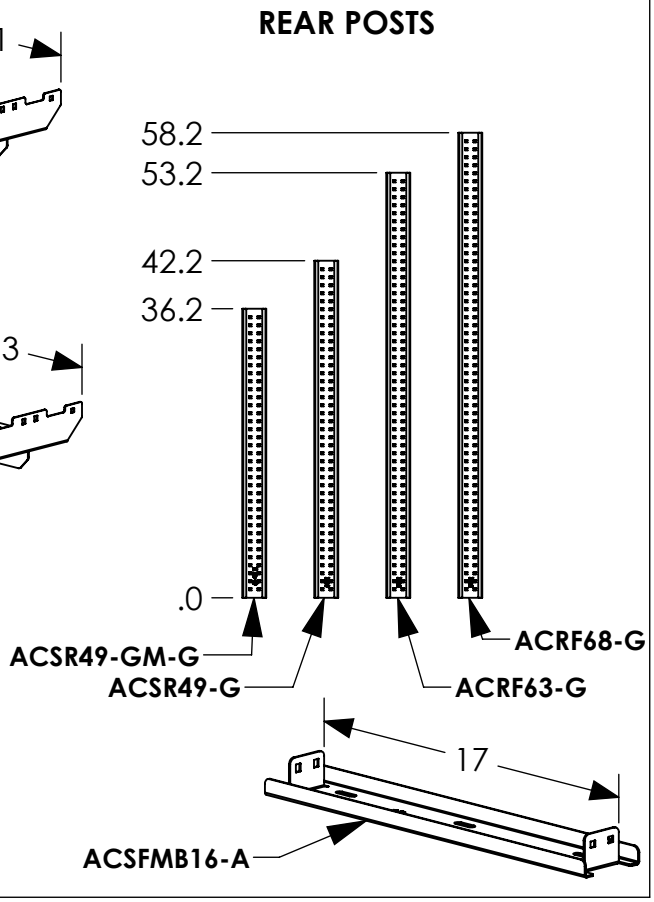

SINGLE CENTER SUPPORT KITS AND DIMENSIONS

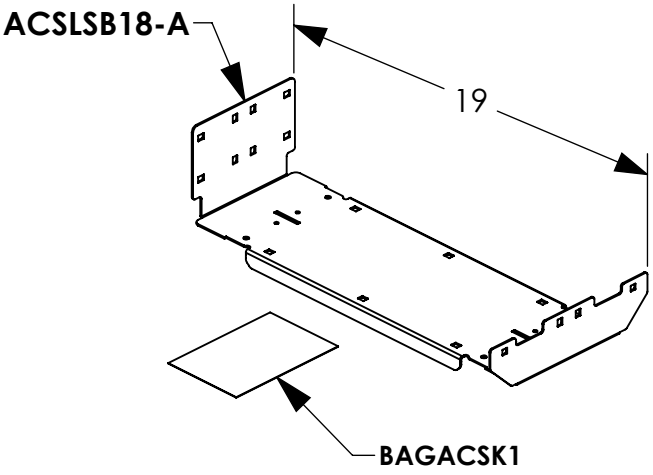

ACSK18A1

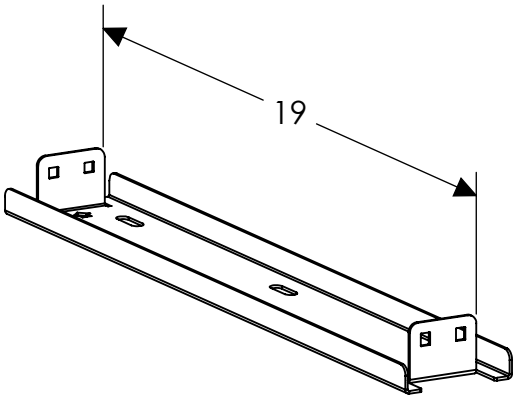

ACSFMB18-A

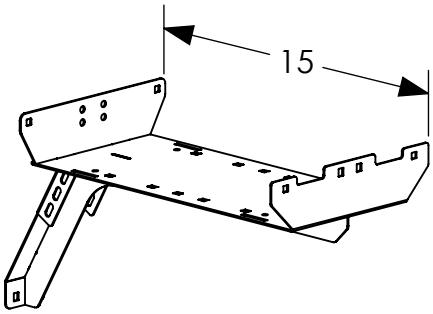

ACSUSB18-A

MOUNTING BRACKET KIT PRODUCT STRUCTURES

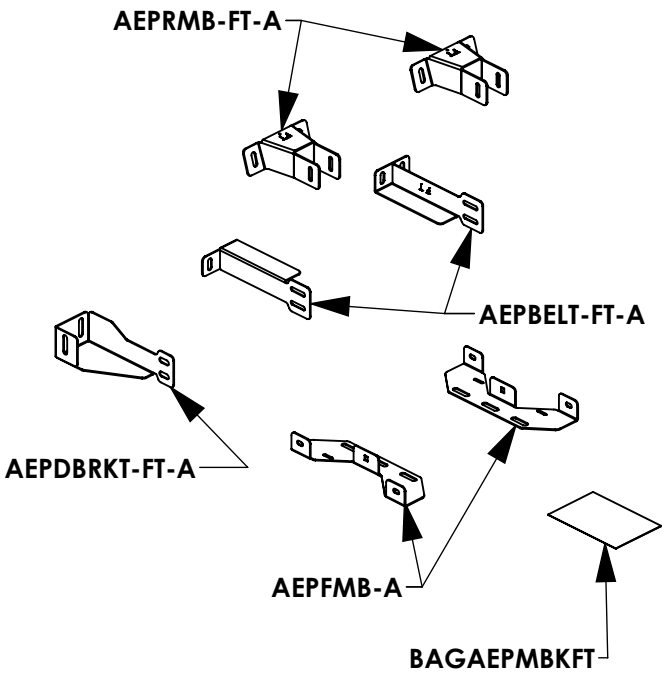

AEPMBKFTA

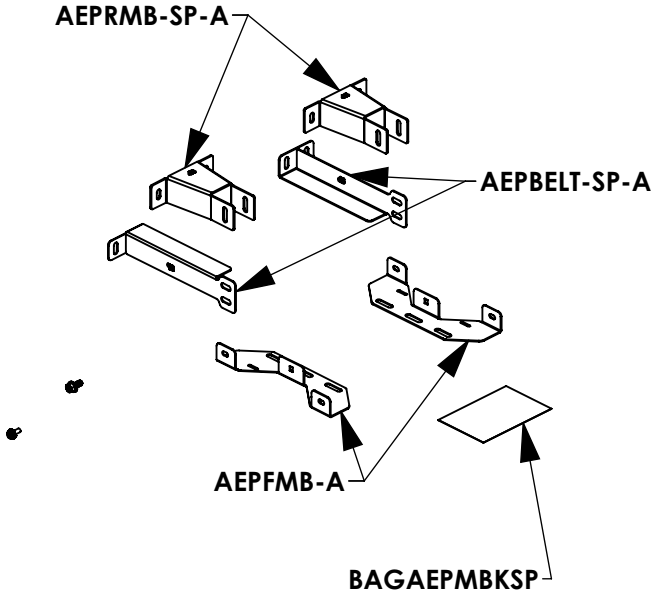

AEPMBKSPA

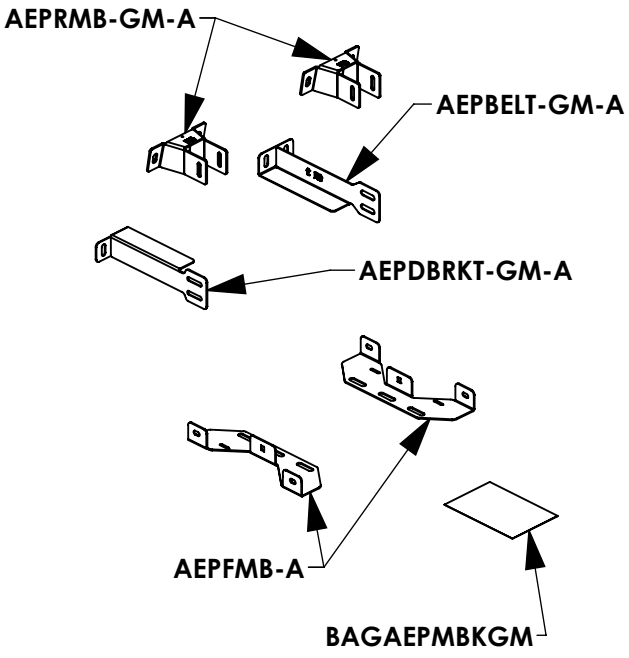

AEPMBKGMA

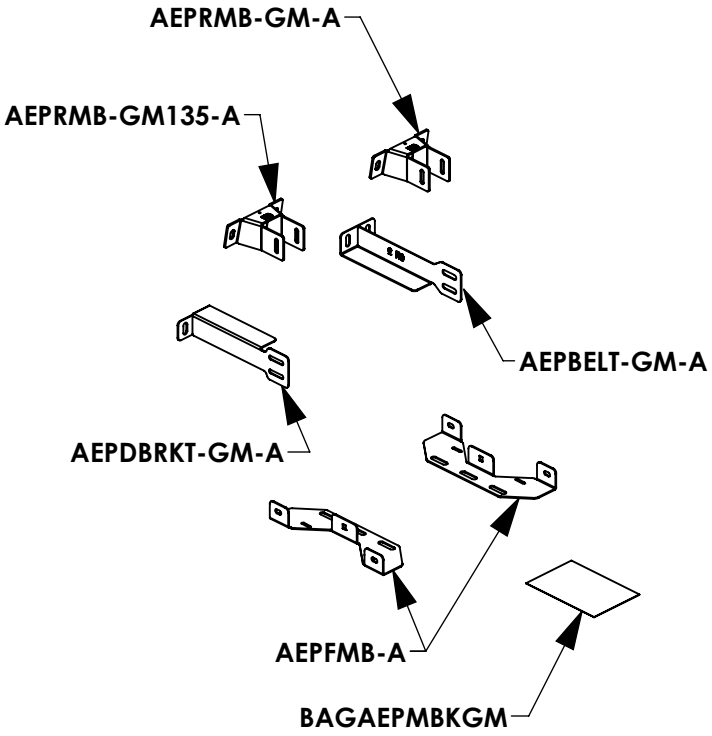

AEPMBKGM135PSA

MOUNTING BRACKET KIT PRODUCT STRUCTURES

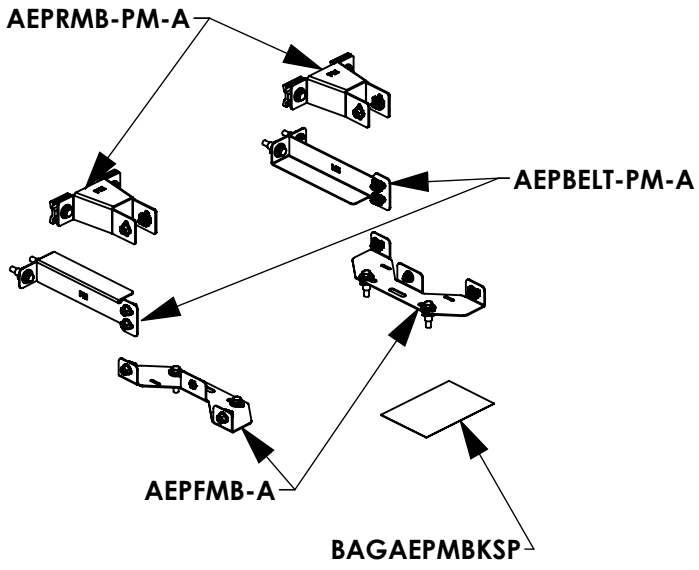

AEPMBKPMA

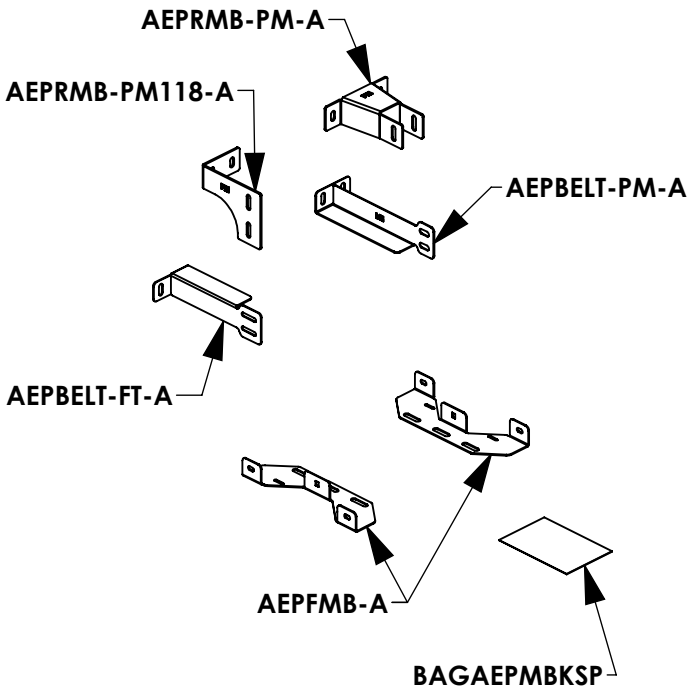

AEPMBKPM118PSA

THIS INSTRUCTION IS TO DEMONSTRATE THE ASSEMBLY AND INSTALLATION OF THE

ADRIAN SHELVING PRODUCT LINE

TO FIND KIT PART NUMBERS AND PRODUCT STRUCTURES OF YOUR SPECIFIC SHELVING UNIT, PLEASE REFER TO PART #: APP-ASHELVING

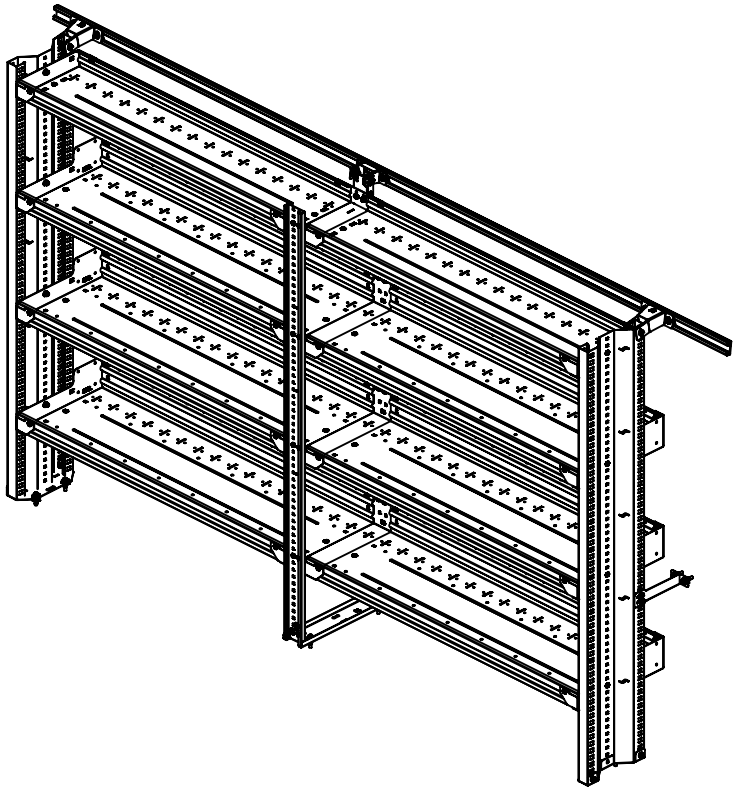

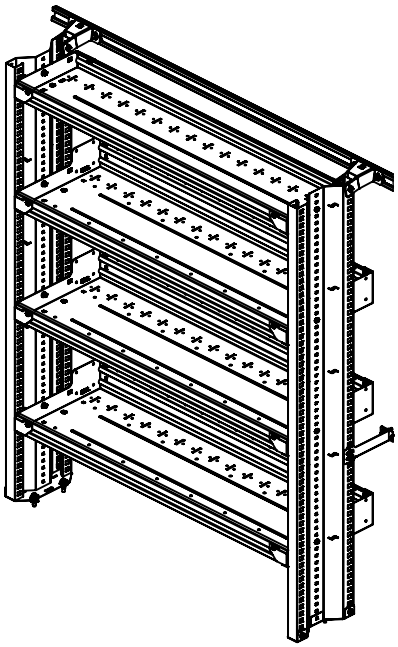

TOOLS NEEDED:

- TAPE MEASURE
- RUBBER MALLET
- IMPACT
- DRILL
- 7/16" SOCKET
- 1/2" SOCKET
- 10MM SOCKET
- 7/16" WRENCH
- 1/2" WRENCH
- PLUSNUT GUN
- MARKER
- 1/2" DRILL BIT
- 1 3/16" HOLE SAW

BEST PRACTICES

GET TO KNOW THE VEHICLE - AT THE BEGINNING OF ANY INSTALLATION, CHECK THE LOCATION OF THE FUEL TANK, FUEL LINES, BRAKE LINES, HIGH VOLTAGE BATTERIES AND WIRING HARNESSES TO AVOID INJURY OR PROPERTY DAMAGE FROM TOOL CONTACT.

SEAL ALL EXTERIOR HOLES - ALL INSTALLATION HOLES SHOULD BE SEALED WITH BUTYL TAPE OR SILICON TO PREVENT WATER AND EXHAUST GASES FROM ENTERING THE VEHICLE.

CONTROL DRILL DEPTH - TO AVOID DAMAGE TO THE VEHICLE, USE A DRILL STOP OR CLEARED STEP BIT WHEN DRILLING INSTALLATION HOLES.

ALWAYS ADD PRIMER - WHEN ADDING INSTALLATION HOLES BE SURE TO USE A SELF-ETCHING PRIMER TO PREVENT CORROSION, FASTENER FAILURE AND INJURY.

MOUNTING POINTS MUST HAVE METAL-TO-METAL CONTACT - USE PROVIDED MOUNTING SPACERS TO ACCOMMODATE FOR VEHICLE FEATURES, CARPET OR SUBFLOORS.

PROVIDE CLEARANCE FOR SPACERS - IF THE INSTALLATION VEHICLE CONTAINS A CARPET OR SUBFLOOR, USE A 1-3/16" DIAMETER CARPET CUTTER (P/N: 31183-0) AT ALL MOUNTING LOCATIONS TO OPEN UP ROOM FOR SPACERS.

CHECK SPACER ORIENTATION - BE SURE THAT THE INDENT IN THE SPACER COVERS THE PLUSNUT HEAD; THIS ENSURES THE MOST METAL-TO-METAL CONTACT AND REDUCES VIBRATION.

PLUSNUT INSTALLATION - A PLUSNUT GUN IS RECOMMENDED FOR PLUSNUT INSTALLATION FOR ITS PRODUCTION SPEED. HOWEVER, A PLUSNUT SETTING TOOL CAN ALSO BE USED (P/N: 22200-0).

THRU-BOLT CLEARANCE - WHEN USING A THRU-BOLT AT ANY MOUNTING LOCATION, BE SURE THAT YOUR HOLE HAS 1/16" CLEARANCE.

BEST PRACTICE: ORGANIZE ALL FASTENERS & VERIFY THAT ALL ARE ACCOUNTED FOR

FASTENERS USED - END CAP KITS

BAG REFERENCE: **SEE TABLE BELOW**

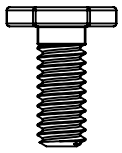

FAS0924
FLAT HEAD CRG BOLT
1/4-20 X .63 LG

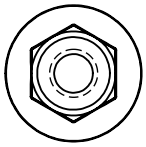

FAS0055
NYLOK FLANGE NUT
1/4-20 HEX

BAG PART NUMBER	BAG DESCRIPTION	FAS0924 QTY	FAS0055 QTY
BAGAECK2T1	BAG FOR END CAP KIT OF 1	10	10
BAGAECK2T3	BAG FOR END CAP KIT OF 3	28	28
BAGAECK2T4	BAG FOR END CAP KIT OF 4	38	38
BAGAECK2T5	BAG FOR END CAP KIT OF 5	48	48

INTENTIONALLY LEFT BLANK

BEST PRACTICE: ORGANIZE ALL FASTENERS & VERIFY THAT ALL ARE ACCOUNTED FOR

FASTENERS USED - CENTER SUPPORT KITS

BAG REFERENCE: **SEE TABLE BELOW**

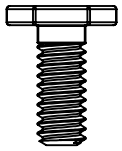

FAS0924
FLAT HEAD CRG BOLT
1/4-20 X .63 LG

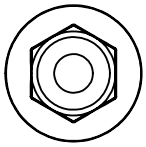

FAS0055
NYLOK FLANGE NUT
1/4-20 HEX

BAG PART NUMBER	BAG DESCRIPTION	FAS0924 QTY	FAS0055 QTY
BAGACSK1	BAG FOR CENTER SUPPORT KIT OF 1	14	14
BAGACSK3	BAG FOR CENTER SUPPORT KIT OF 3	42	46
BAGACSK4	BAG FOR CENTER SUPPORT KIT OF 4	56	60
BAGACSK5	BAG FOR CENTER SUPPORT KIT OF 5	70	74

NOTE: FASTENERS BELOW ARE NOT INCLUDED IN BAGACSK1

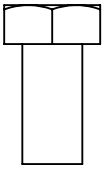

FAS0165
HEX HEAD BOLT
5/16-18 X .63 LG
QTY: 02

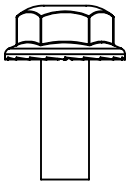

FAS0018
HEX FLANGE BOLT
1/4-20 X .63 LG
QTY: 04

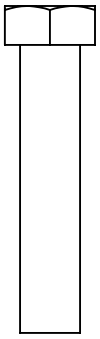

FAS0092
HEX HEAD BOLT
5/16-18 X 1.5 LG
QTY: 04

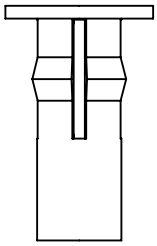

FAS0091
PLUSNUT
5/16-18
QTY: 04

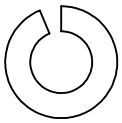

FAS0098
SPLIT LOCK WASHER
5/16
QTY: 04

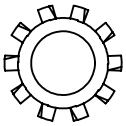

FAS0085
STAR LOCK WASHER
5/16
QTY: 02

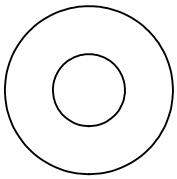

FAS0086
FLAT WASHER
5/16
QTY: 06

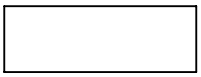

03927-1
FLOOR SPACER
11/32
QTY: 04

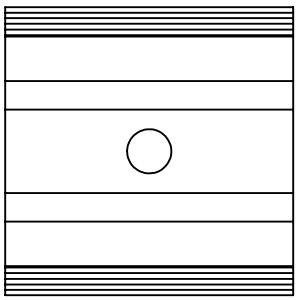

35335-0
AD RAIL SLIDE
1.5 LG
QTY: 02

03927-2
FLOOR SPACER
11/32
QTY: 04

INTENTIONALLY LEFT BLANK

BEST PRACTICE: ORGANIZE ALL FASTENERS & VERIFY THAT ALL ARE ACCOUNTED FOR

FASTENERS USED - FORD TRANSIT MOUNTING BRACKETS

BAG REFERENCE: **BAGAEPMBKFT**

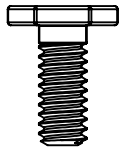

FAS0924
FLAT HEAD CRG BOLT
1/4-20 X .63 LG
QTY: 02

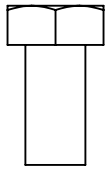

FAS0165
HEX HEAD BOLT
5/16-18 X .63 LG
QTY: 04

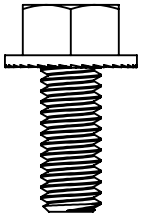

FAS0438
HEX FLANGE BOLT
5/16-18 X .75 LG
QTY: 02

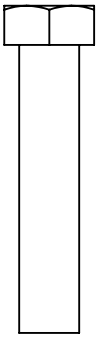

FAS0092
HEX HEAD BOLT
5/16-18 X 1.5 LG
QTY: 08

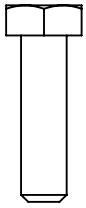

FAS0187
SCREW, HH,
M6-1.0 X 22
QTY: 01

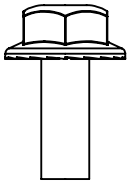

FAS0018
HEX FLANGE BOLT
1/4-20 X .63 LG
QTY: 12

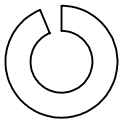

FAS0098
SPLIT LOCK WASHER
5/16
QTY: 08

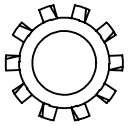

FAS0085
STAR LOCK WASHER
5/16
QTY: 04

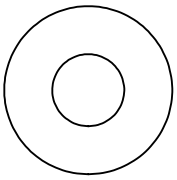

FAS0086
FLAT WASHER
5/16
QTY: 12

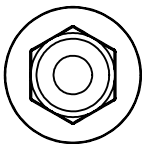

FAS0055
NYLOK FLANGE NUT
1/4-20 HEX
QTY: 02

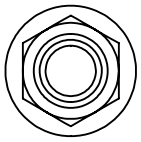

FAS0440
NYLOK FLANGE NUT
5/16-18 HEX
QTY: 02

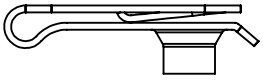

FAS0994
U-NUT
1/4-20
QTY: 12

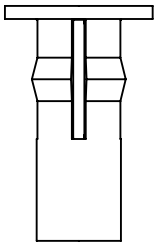

FAS0091
PLUSNUT
5/16-18
QTY: 08

FAS0060
WASHER, LCK
SPLIT, 1/4, ZP
QTY: 01

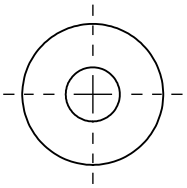

FAS0067
WASHER, FLAT,
USS, 1/4, ZP
QTY: 1

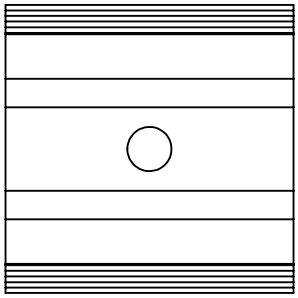

35335-0
AD RAIL SLIDE
1.5 LG
QTY: 04

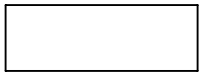

03927-1
FLOOR SPACER
11/32
QTY: 04

03927-2
FLOOR SPACER
11/32
QTY: 04

INTENTIONALLY LEFT BLANK

BEST PRACTICE: ORGANIZE ALL FASTENERS & VERIFY THAT ALL ARE ACCOUNTED FOR

FASTENERS USED - GM EXPRESS/GMC SAVANA MOUNTING BRACKETS

BAG REFERENCE: **BAGAEPMBKGM**

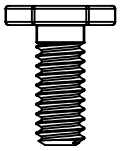

FAS0924
FLAT HEAD CRG BOLT
1/4-20 X .63 LG
QTY: 02

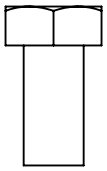

FAS0165
HEX HEAD BOLT
5/16-18 X .63 LG
QTY: 08

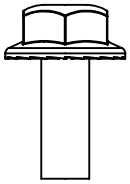

FAS0018
HEX FLANGE BOLT
1/4-20 X .63 LG
QTY: 12

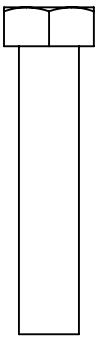

FAS0092
HEX HEAD BOLT
5/16-18 X 1.5 LG
QTY: 04

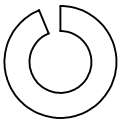

FAS0098
SPLIT LOCK WASHER
5/16
QTY: 04

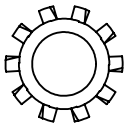

FAS0085
STAR LOCK WASHER
5/16
QTY: 08

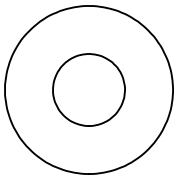

FAS0086
FLAT WASHER
5/16
QTY: 12

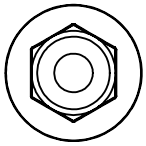

FAS0055
NYLOK FLANGE NUT
1/4-20 HEX
QTY: 02

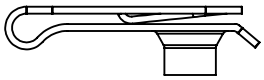

FAS0994
U-NUT
1/4-20
QTY: 12

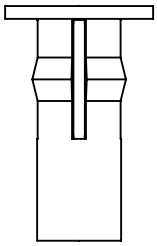

FAS0091
PLUSNUT
5/16-18
QTY: 04

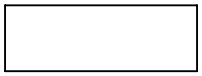

03927-1
FLOOR SPACER
11/32
QTY: 04

03927-2
FLOOR SPACER
11/32
QTY: 04

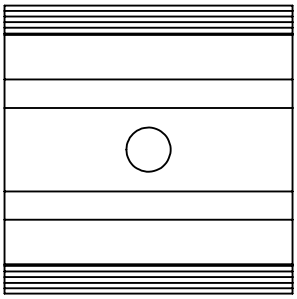

35335-0
AD RAIL SLIDE
1.5 LG
QTY: 08

INTENTIONALLY LEFT BLANK

BEST PRACTICE: ORGANIZE ALL FASTENERS & VERIFY THAT ALL ARE ACCOUNTED FOR

FASTENERS USED - MERCEDES SPRINTER/RAM PROMASTER MOUNTING BRACKETS

BAG REFERENCE: **BAGAEPMBKSP**

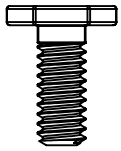

FAS0924
FLAT HEAD CRG BOLT
1/4-20 X .63 LG
QTY: 02

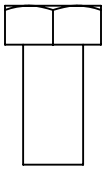

FAS0165
HEX HEAD BOLT
5/16-18 X .63 LG
QTY: 04

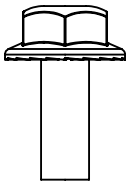

FAS0018
HEX FLANGE BOLT
1/4-20 X .63 LG
QTY: 12

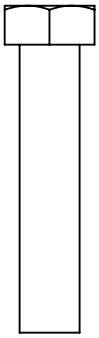

FAS0092
HEX HEAD BOLT
5/16-18 X 1.5 LG
QTY: 08

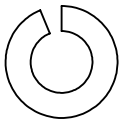

FAS0098
SPLIT LOCK WASHER
5/16
QTY: 08

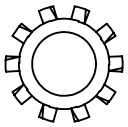

FAS0085
STAR LOCK WASHER
5/16
QTY: 04

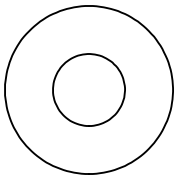

FAS0086
FLAT WASHER
5/16
QTY: 12

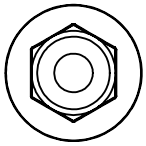

FAS0055
NYLOK FLANGE NUT
1/4-20 HEX
QTY: 02

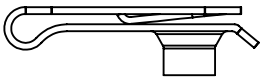

FAS0994
U-NUT
1/4-20
QTY: 12

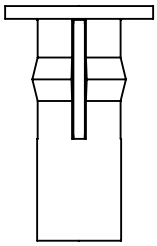

FAS0091
PLUSNUT
5/16-18
QTY: 08

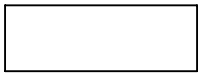

03927-1
FLOOR SPACER
11/32
QTY: 04

03927-2
FLOOR SPACER
11/32
QTY: 04

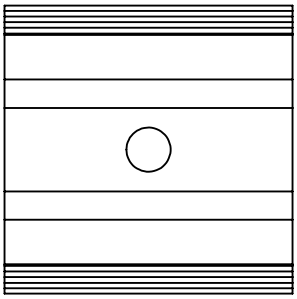

35335-0
AD RAIL SLIDE
1.5 LG
QTY: 04

INTENTIONALLY LEFT BLANK

DETERMINE DESIRED SHELF HEIGHTS FOR YOUR VEHICLE AND ACCESSORIES
SPACE SHELVES EVENLY UNLESS OTHERWISE SPECIFIED

- MEASUREMENTS PROVIDED IN TABLES BELOW APPLY TO ALL END PANEL HEIGHTS
- SQUARE HOLE PATTERN IS 1 INCH SPACING FROM HOLE-TO-HOLE
- "S" SYMBOL = 12 HOLES (12 INCHES)

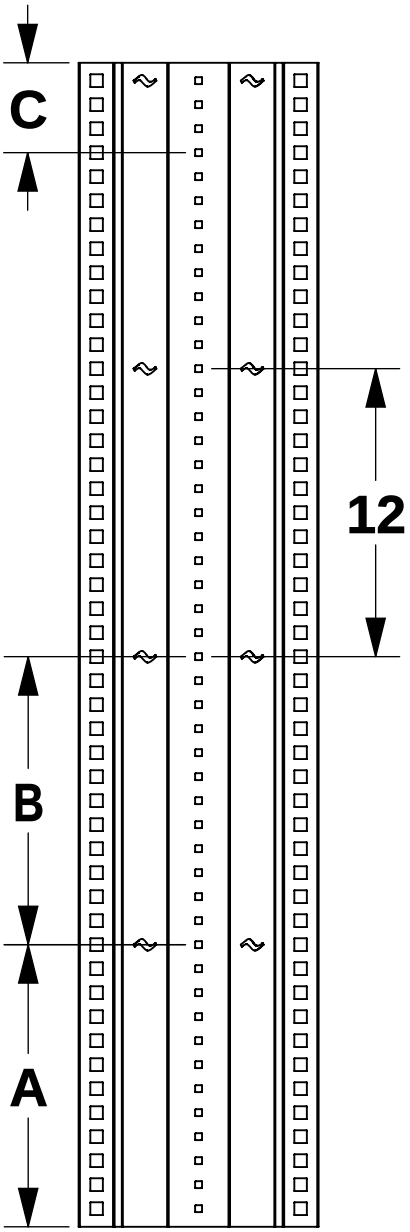

TABLE 1

OEM/MODEL	ROOF HEIGHT	A	C
FORD TRANSIT	LOW	12	3
	MEDIUM	12	4
	HIGH	12	3
GM EXPRESS/ GMC SAVANA	STD	14	6
RAM PROMASTER	LOW	19	4
	HIGH	19	2
MERCEDES SPRINTER	STD	15	4
	HIGH	15	3

A - DIMENSION REPRESENTS MINIMUM NUMBER OF HOLES FROM BOTTOM OF END PANEL FOR BOTTOM SHELF TO CLEAR VEHICLE'S WHEEL WELL

C - DIMENSION REPERESENTS NUMBER OF HOLES FROM TOP OF END PANEL FOR TOP SHELF LOCATION WHEN INSTALLING CENTER SUPPORT
***NOTE - DIMENSION COULD VARY IF INSTALLING ON OEM OR AFTERMARKET FLOOR MAT

TABLE 2

ACCESSORY	B
ADRIAN DRAWER UNITS (ALL MODELS)	14
ADRIAN DOOR KITS (ALL LENGTHS)	12

B - DIMENSION REPRESENTS NUMBER OF HOLES SPACING OF SHELVES FOR MOUNTING ACCESSORY PRODUCTS

STEP 1 - ASSEMBLE END CAPS TO END PANELS

Step 1.1

LOCATE DESIRED HOLE HEIGHT FOR SHELF

INSERT HORIZONTAL TAB IN SQUARE HOLE

PUSH VERTICAL TAB INTO OPPOSITE CORRESPONDING SQUARE HOLE

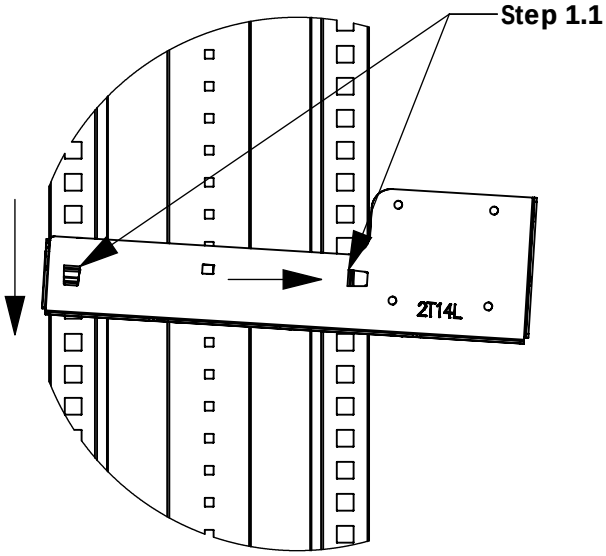

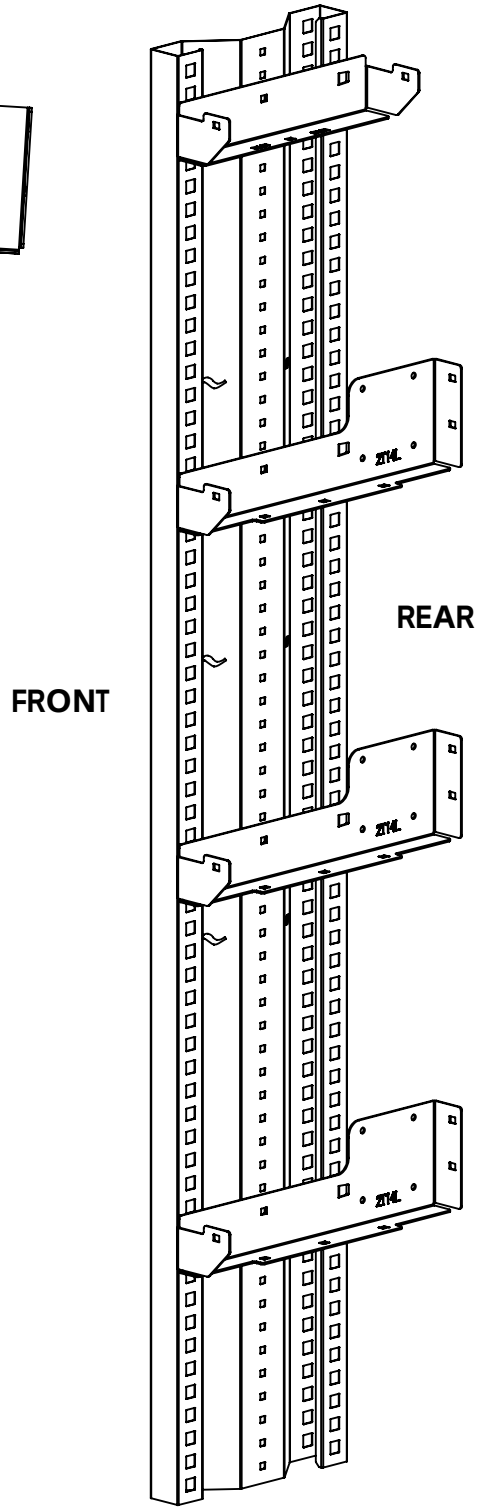

Step 1.2

REPEAT FOR OTHER END PANEL

STEP 2 - ASSEMBLE SHELF TO END CAP

Step 2.1

FULLY TIGHTEN
FAS0924 AND FAS0055 (02 PLACES PER SHELF) 7/16" SOCKET

REPEAT STEP 2.1 FOR REMAINING "2T" SHELVES

Step 2.2

FULLY TIGHTEN
FAS0924 AND FAS0055 (02 PLACES PER SHELF) 7/16" SOCKET

REPEAT STEP 2.2 FOR REMAINING "2T" SHELVES

Step 2.3

FULLY TIGHTEN
FAS0924 AND FAS0055 (02 PLACES, TOP SHELF ONLY) 7/16" SOCKET

Step 2.4

FULLY TIGHTEN
FAS0924 AND FAS0055 (02 PLACES, TOP SHELF ONLY) 7/16" SOCKET

Step 2.5

REPEAT STEPS 2.1 - 2.4 FOR OTHER END PANEL ASSEMBLY

*****IF INSTALLING CENTER SUPPORT, SKIP THIS STEP AND PROCEED TO STEP 3**

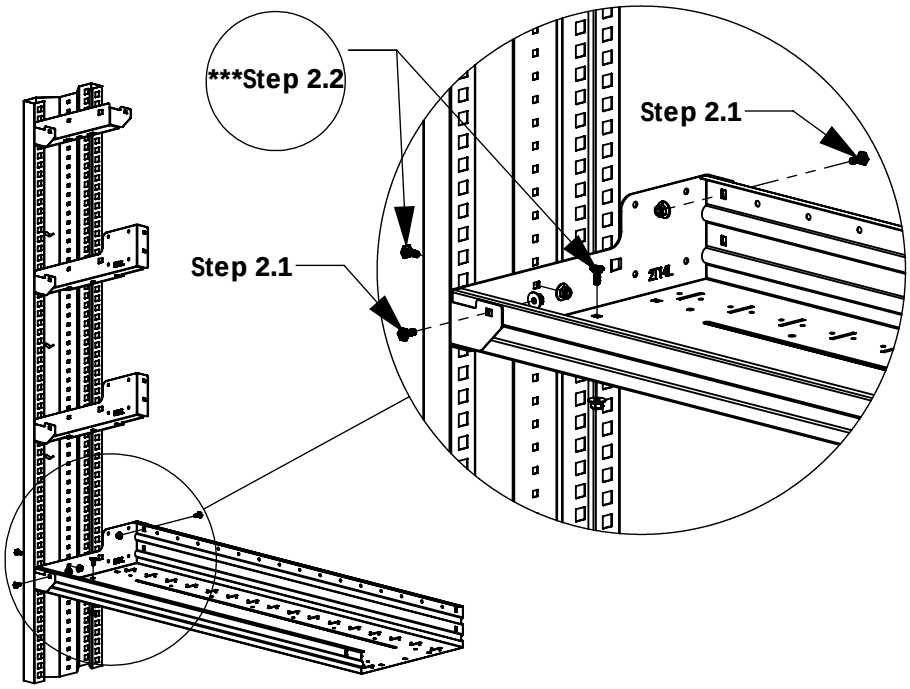

*****NOTE:** **IF INSTALLING A DOOR KIT, DO NOT INSERT FASTENER INTO THE END PANEL, BOTTOM OF THAT SHELF, OR THE SHELF ABOVE IT AT THIS TIME**

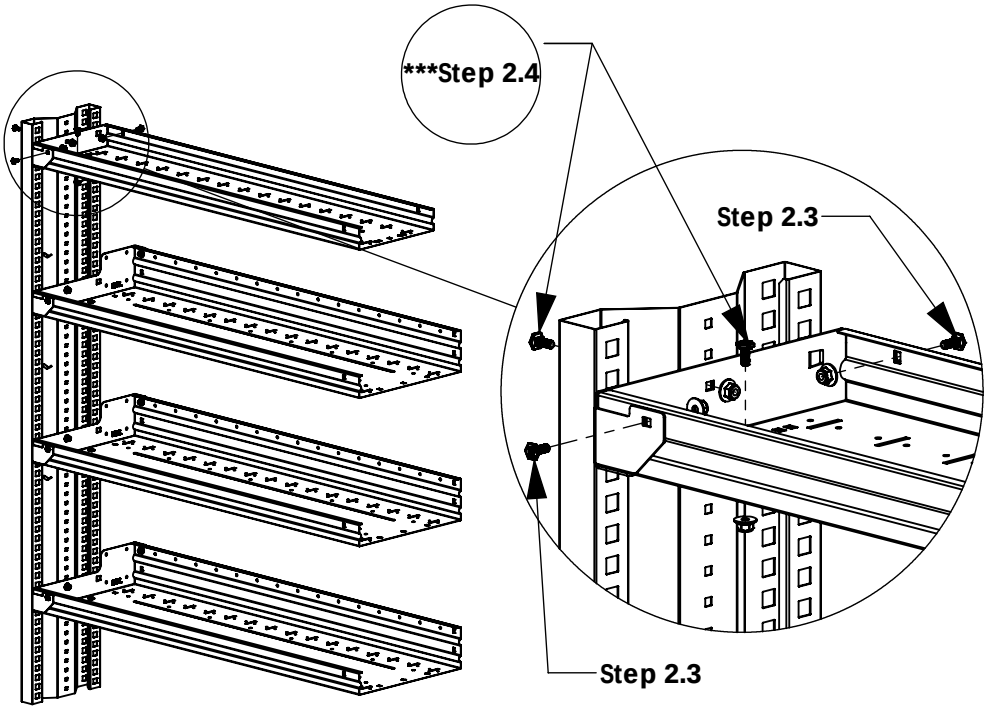

STEP 3 - ASSEMBLE CENTER SUPPORT

SKIP TO STEP 5 IF NOT INSTALLING SHELVING UNIT WITH CENTER SUPPORT

Step 3.1

LOOSELY ASSEMBLE UNTIL AFTER STEP 9.4
FAS0924 AND FAS0055 (04 PLACES)
7/16" SOCKET

ALIGN ARROW OF FRONT POST WITH ARROW ON FLOOR MOUNTING BRACKET

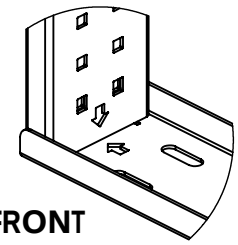

Step 3.2

FULLY TIGHTEN
FAS0924 AND FAS0055 (04 PLACES)
7/16" SOCKET

***** FRONT POST LOCATION IS EQUIVALENT TO TOP END CAP LOCATION**

◇ = 12 HOLES (12 IN)

***** BACK POST LOCATION IS 9 HOLES LOWER THAN FRONT POST**

Step 3.3

FULLY TIGHTEN
FAS0924 AND FAS0055 (04 PLACES PER SUPPORT BRACKET)
7/16" SOCKET

***** FRONT AND REAR POST LOCATIONS ARE EQUIVALENT TO END CAP LOCATIONS**

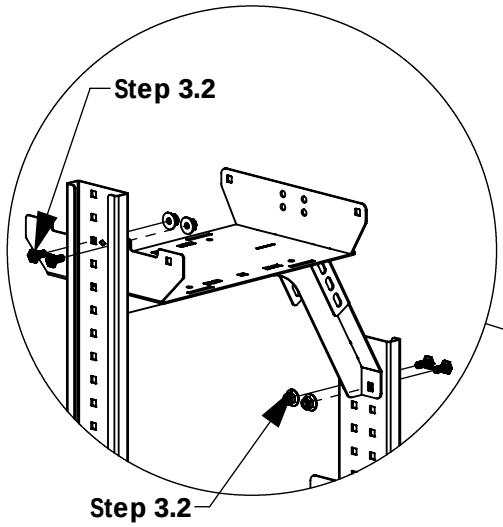

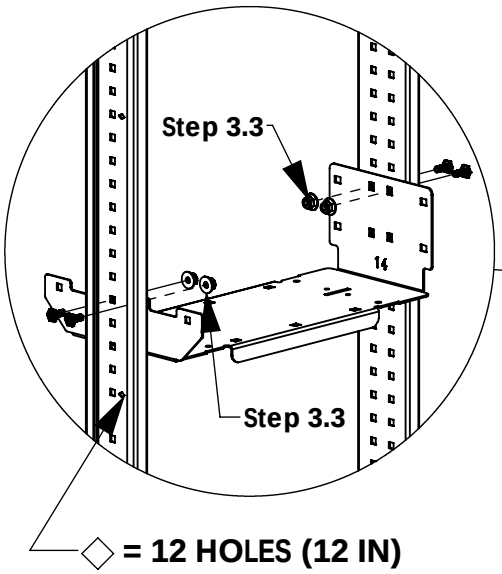

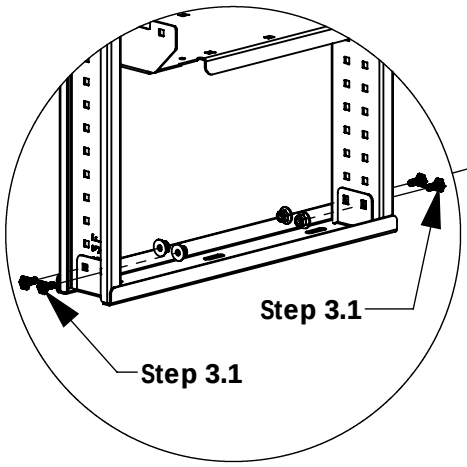

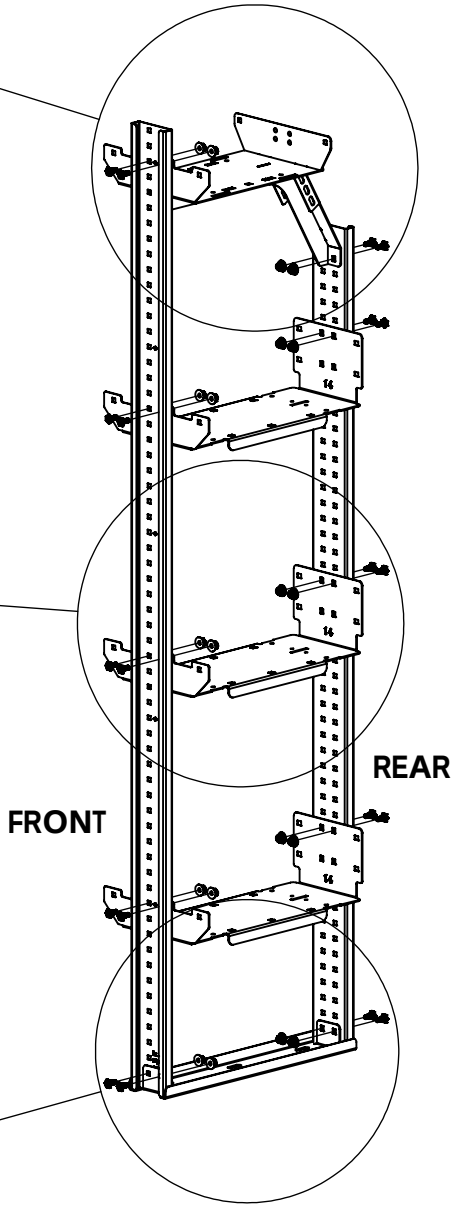

STEP 4 - ASSEMBLE SHELVES TO CENTER SUPPORT BRACKETS

Step 4.1

FULLY TIGHTEN
FAS0924 AND FAS0055 (03 PLACES) 7/16" SOCKET

Step 4.2

FULLY TIGHTEN
FAS0924 AND FAS0055 (03 PLACES PER LOWER SUPPORT BRACKET) 7/16" SOCKET

Step 4.3

REPEAT STEPS 2.1, 2.2, 4.1, & 4.2 TO ATTACH OTHER SET OF SHELVES TO THE CENTER SUPPORT AND OPPOSITE END PANEL

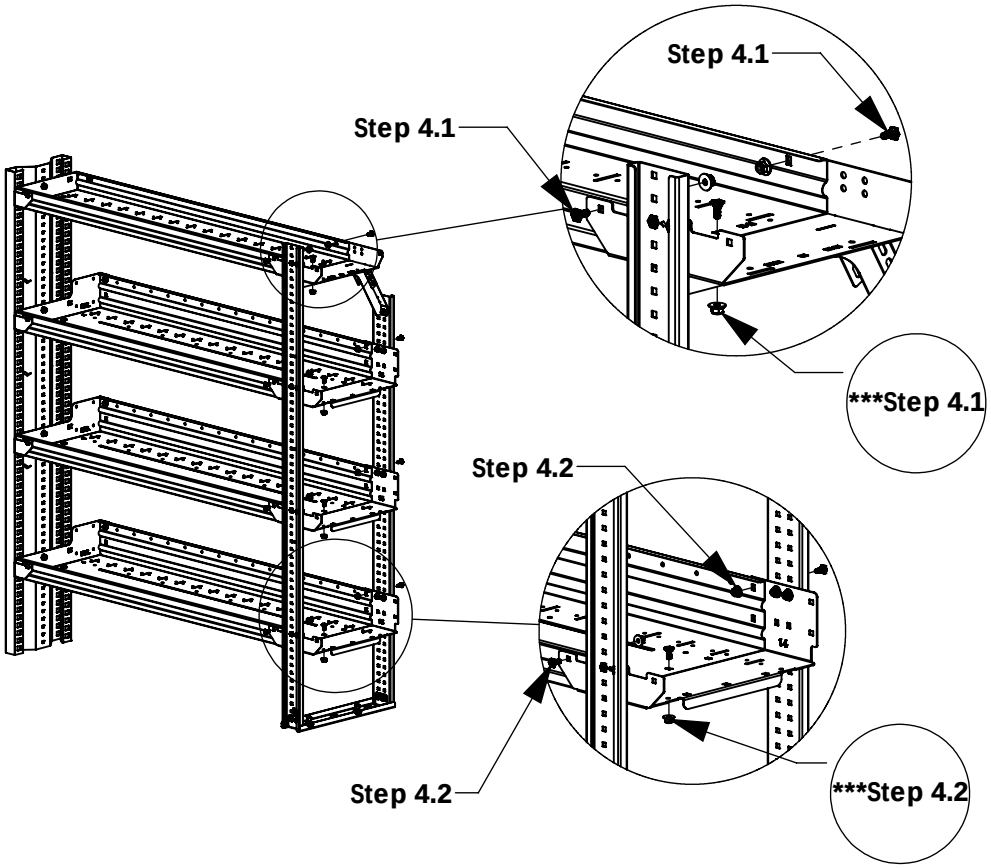

***NOTE: **IF INSTALLING A DOOR KIT, DO NOT INSERT FASTENER INTO THE BOTTOM OF THAT SHELF, OR THE SHELF ABOVE IT AT THIS TIME**

IF INSTALLING A DOOR KIT, PLEASE COMPLETE STEPS 1-4 IN INSTRUCTION INS-ASK AT THIS TIME BEFORE COMPLETING THE REST OF THIS INSTRUCTION

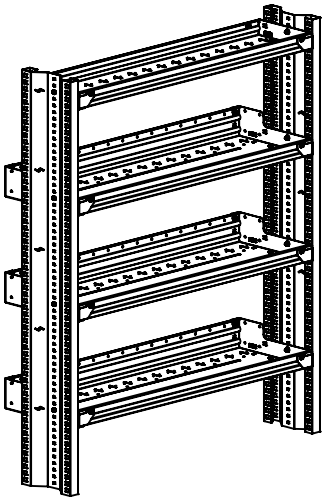

ASSEMBLY IS COMPLETE, PROCEED TO BEGINNING OF INSTALLATION STEPS

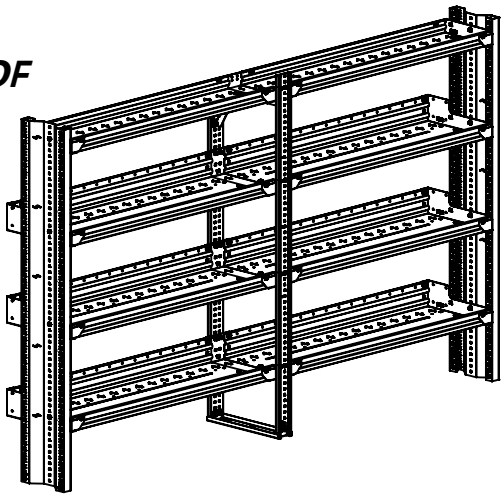

STEP 5 - ATTACH RAIL MOUNTING BRACKET TO VEHICLE UPPER RAIL KIT

Step 5.1

INSERT RAIL SLIDES INTO UPPER RAIL (IF YOU HAVE NOT DONE SO ALREADY)

QTY 2 PER RAIL MOUNTING BRACKET (END PANEL & CENTER SUPPORT)

Step 5.2

LOOSELY ASSEMBLE UNTIL AFTER STEP 10
FAS0165, FAS0085, FAS0086, 35335-0 (04 PLACES)
1/2" SOCKET

Step 5.3

LOOSELY ASSEMBLE UNTIL AFTER STEP 10
FAS0018 AND FAS0994 (04 PLACES)
7/16" SOCKET

FAS0994 SHOULD BE INSERTED INTO THE HOLE THAT BEST FITS YOUR VEHICLE AND YOUR SELECTED FLOOR OPTION

RAIL MOUNTING BRACKETS ARE VEHICLE SPECIFIC AND ARE LABELED ACCORDINGLY. FORD TRANSIT BRACKETS ARE SHOWN FOR THE PURPOSES OF THIS INSTRUCTION

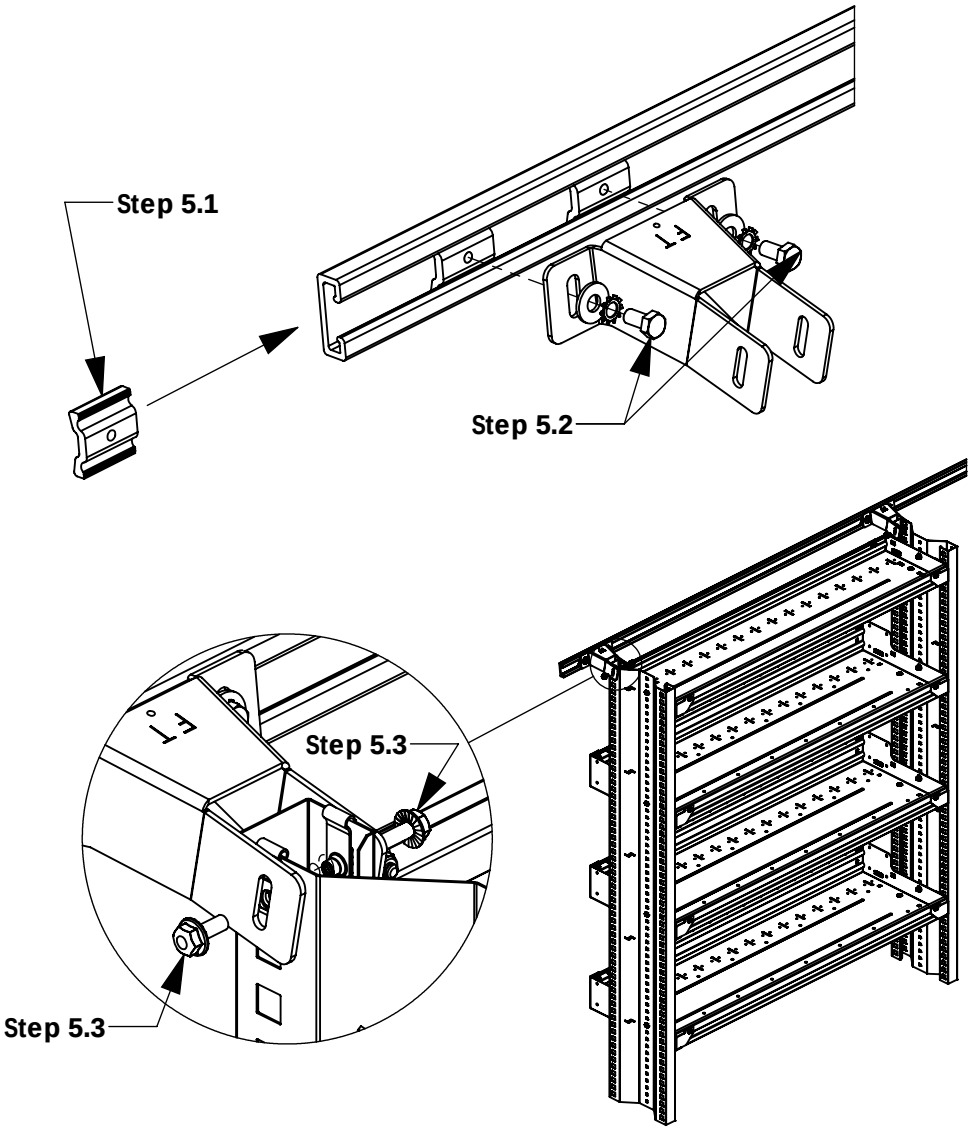

IF INSTALLING A SHELVING UNIT ON THE PASSENGER SIDE OF ONE OF THE FOLLOWING VEHILCES:

- RAM PROMASTER LOW ROOF 118" WHEELBASE

THE FRONT MOUNTING BRACKET WILL MOUNT AS SHOWN

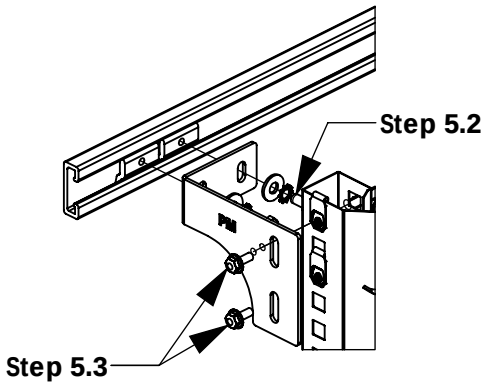

STEP 6 - ATTACH CENTER SUPPORT MOUNTING BRACKET TO RAIL

SKIP TO STEP 7 IF NOT INSTALLING CENTER SUPPORT

Step 6.1

LOOSELY ASSEMBLE UNTIL AFTER STEP 10
FAS0165, FAS0085, FAS0086, 35335-0 (02 PLACES)
1/2" SOCKET

Step 6.2A

LOOSELY ASSEMBLE UNTIL AFTER STEP 10
FAS0018 AND FAS0055 (02 PLACES)
7/16" WRENCH
7/16" SOCKET

Step 6.3A

LOOSELY ASSEMBLE UNTIL AFTER STEP 10
FAS0018 AND FAS0055 (02 PLACES)
7/16" WRENCH
7/16" SOCKET

Step 6.2B

LOOSELY ASSEMBLE UNTIL AFTER STEP 10
FAS0018 AND FAS0055 (02 PLACES)
7/16" WRENCH
7/16" SOCKET

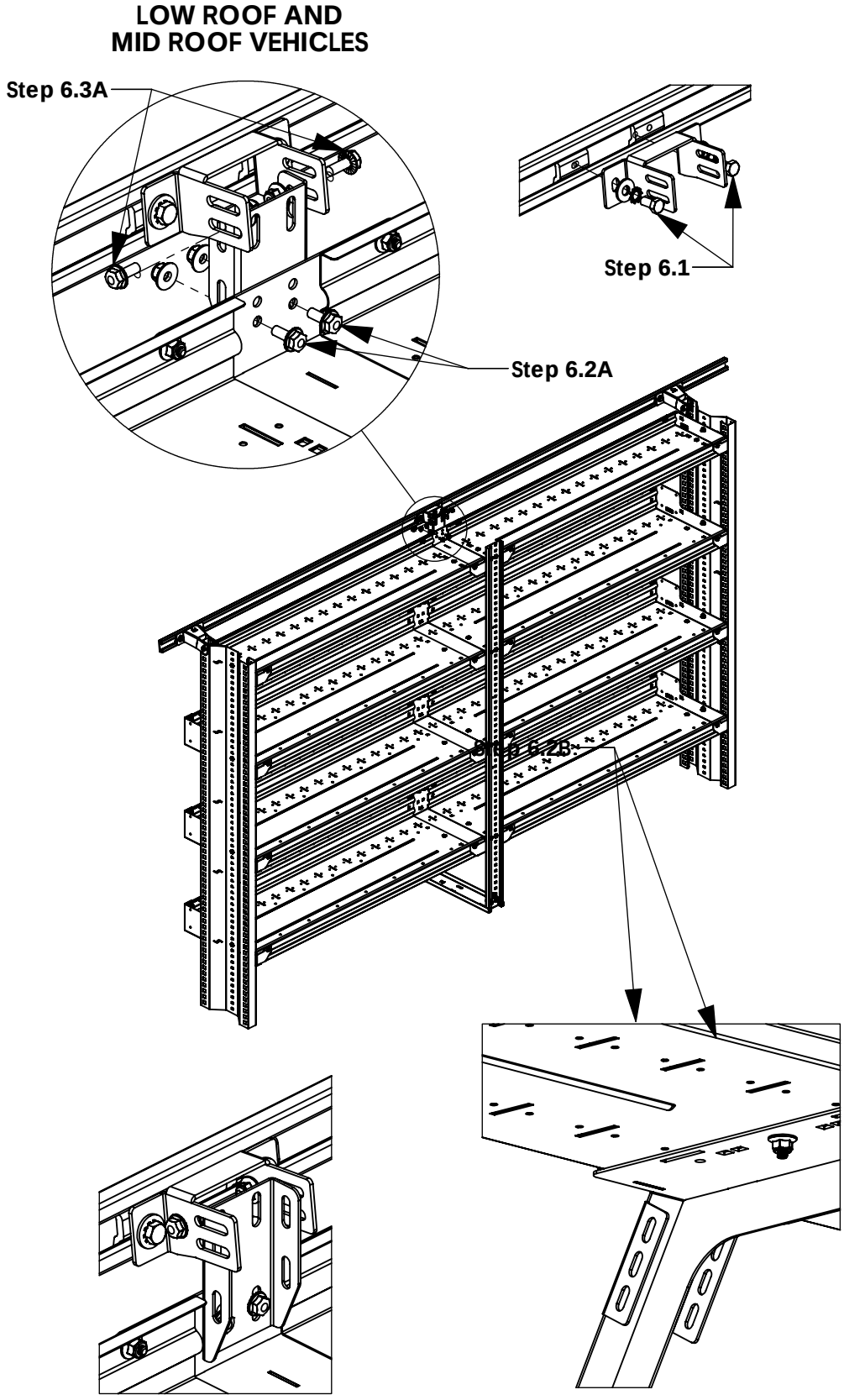

STEP 7A - ATTACH BELTLINE BRACKETS TO SHELVING UNIT AND INSTALL IN VEHICLE - FORD TRANSIT VANS

Step 7A.1

FULLY TIGHTEN
FAS0994 AND FAS0018
(04 PLACES)
7/16" SOCKET

Step 7A.2.1

MARK AND DRILL 1/2" HOLES IN BELTLINE OF VEHICLE

SET PLUSNUTS IN DRILLED HOLES

LOOSELY ASSEMBLE UNTIL AFTER STEP 10
FAS0092, FAS0098, FAS0086, FAS0091
(02 PLACES)
1/2" DRILL BIT
PLUSNUT GUN
1/2" SOCKET

Step 7A.2.2

PLACE BRACKET AGAINST DRIVER SIDE D-PILLAR

LOOSELY ASSEMBLE UNTIL AFTER STEP 10
FAS0187, FAS0060, FAS0067
(02 PLACES)

10MM SOCKET

Step 7A.2.3

LOOSELY ASSEMBLE UNTIL AFTER STEP 10
FAS0018 AND FAS0440
(02 PLACES)
1/2" WRENCH
1/2" SOCKET
7/16" SOCKET

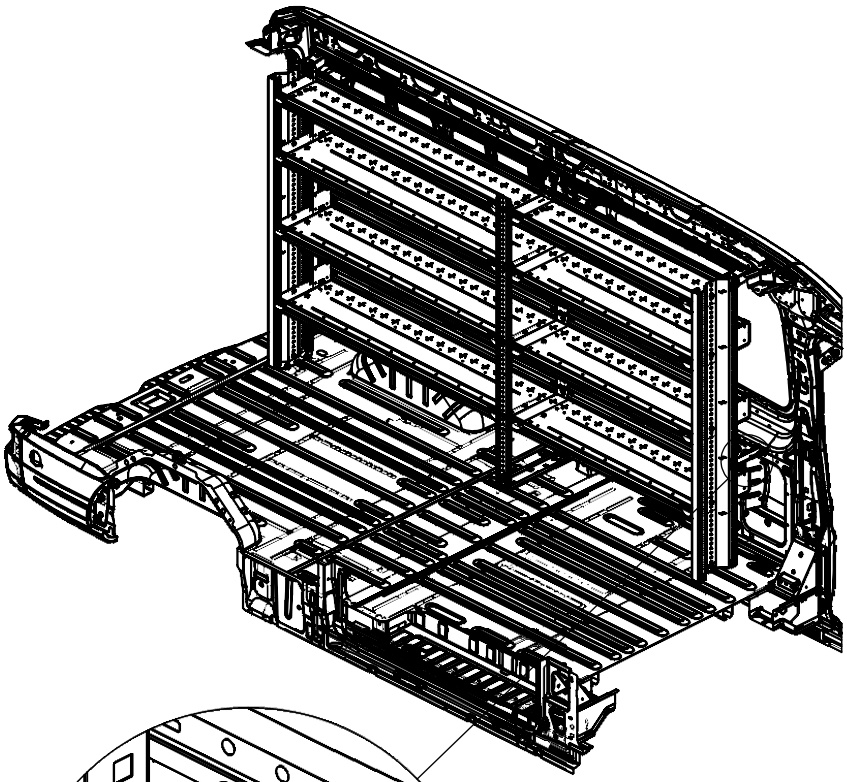

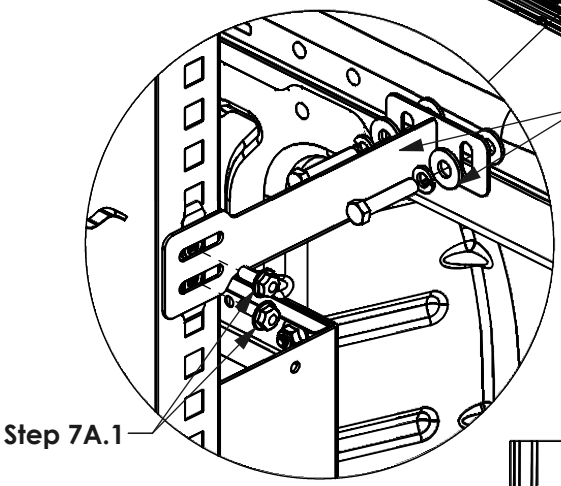

DRIVER SIDE FRONT / PASSENGER SIDE MOUNTING

DRIVER SIDE REAR D-PILLAR MOUNTING

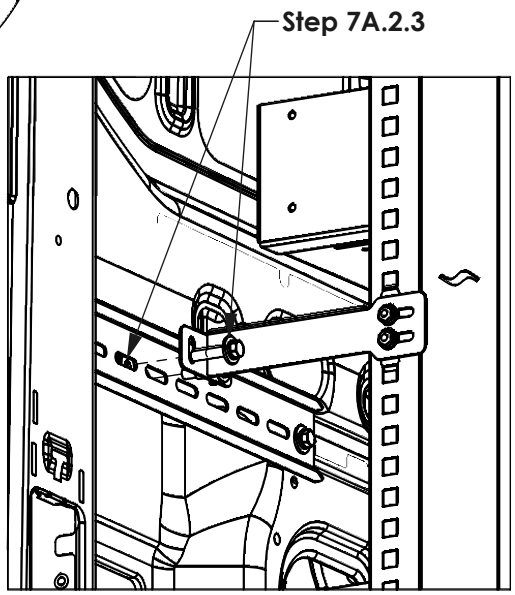

DRIVER SIDE REAR SPAN BRACKET MOUNTING

STEP 7B - ATTACH BELTLINE BRACKETS TO SHELVING UNIT AND INSTALL IN VEHICLE - GM EXPRESS/GMC SAVANA VANS

Step 7B.1

FULLY TIGHTEN
FAS0994 AND FAS0018 (04 PLACES)
7/16" SOCKET

FRONT BRACKET ON DRIVER SIDE AND REAR BRACKET ON PASSENGER SIDE IS LABELED AS "GM 3"

REAR BRACKET ON DRIVER SIDE AND FRONT BRACKET ON PASSENGER SIDE IS LABELED AS "GM 1"

Step 7B.2

LOOSELY ASSEMBLE UNTIL AFTER STEP 10
FAS0165, FAS0085, FAS0086, 35335-0 (04 PLACES)
1/2" SOCKET

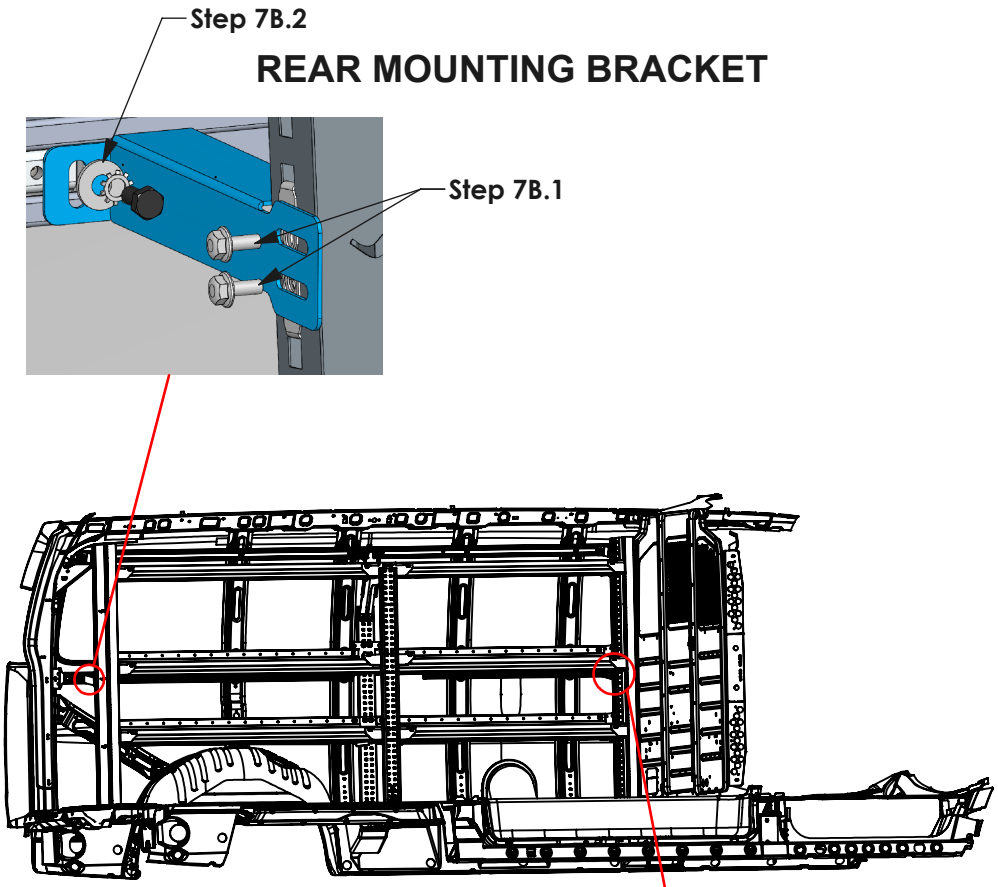

ENSURE BELTLINE RAIL IS IN CORRECT LOCATION ON WALL TO ATTACH

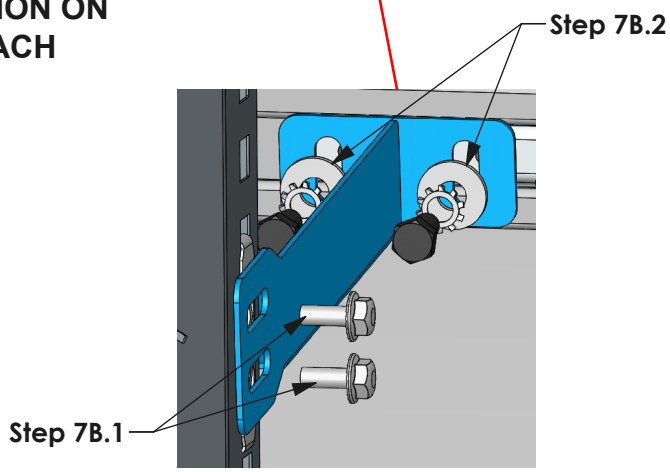

NOTE: PARTITION REMOVED FOR CLARITY

FRONT MOUNTING BRACKET

STEP 7C - ATTACH BELTLINE BRACKETS TO SHELVING UNIT AND INSTALL IN VEHICLE - RAM PROMASTER VANS

Step 7C.1

FULLY TIGHTEN
FAS0994 AND FAS0018
(04 PLACES)
7/16" SOCKET

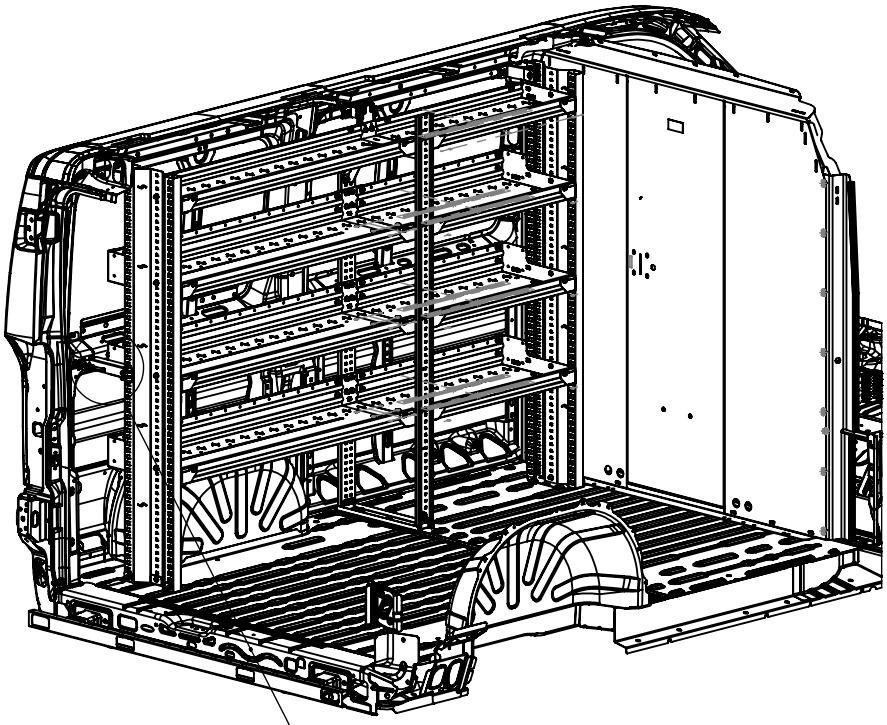

Step 7C.2

MARK AND DRILL 1/2" HOLES IN BELTLINE OF VEHICLE

SET PLUSNUTS IN DRILLED HOLES

LOOSELY ASSEMBLE UNTIL AFTER STEP 10
FAS0092, FAS0098, FAS0086, FAS0091
(04 PLACES)
1/2" DRILL BIT
PLUSNUT GUN
1/2" SOCKET

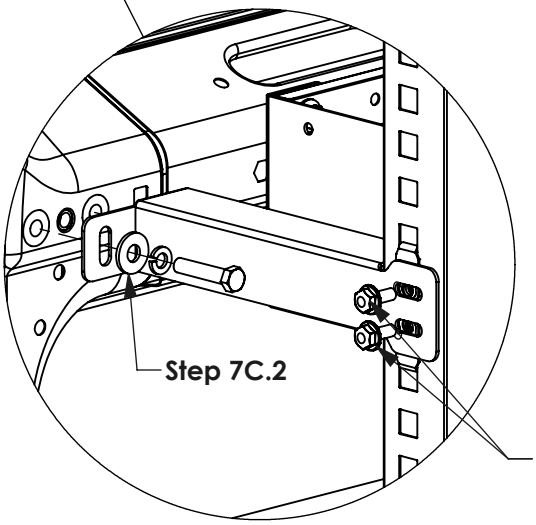

PROMASTER LOW ROOF
118" WHEELBASE
PASSENGER SIDE ONLY!

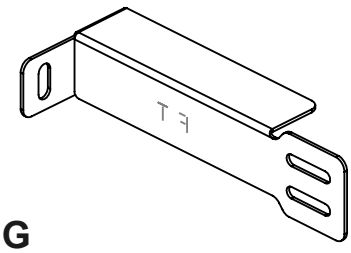

USE FORD TRANSIT BRACKET
FOR FRONT BELTLINE MOUNTING

STEP 7D - ATTACH BELTLINE BRACKETS TO SHELVING UNIT AND INSTALL IN VEHICLE - MERCEDES SPRINTER VANS

Step 7D.1

FULLY TIGHTEN
FAS0994 AND FAS0018
(04 PLACES)
7/16" SOCKET

Step 7D.2

MARK AND DRILL 1/2" HOLES IN BELTLINE OF VEHICLE

SET PLUSNUTS IN DRILLED HOLES

LOOSELY ASSEMBLE UNTIL AFTER STEP 10
FAS0092, FAS0098, FAS0086, FAS0091
(04 PLACES)
1/2" DRILL BIT
PLUSNUT GUN
1/2" SOCKET

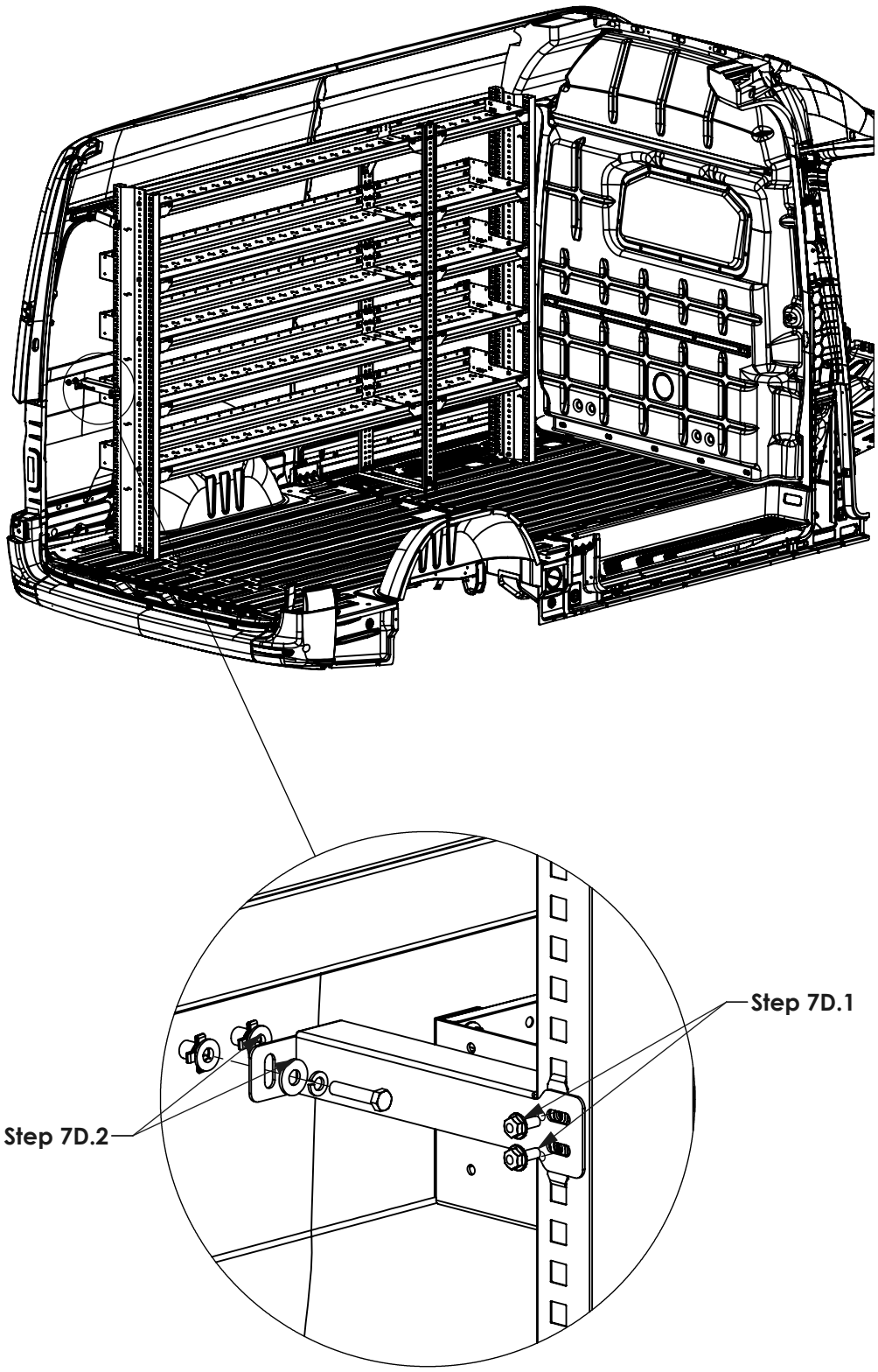

ALL LOCATIONS

STEP 8 - MARK AND DRILL HOLES FOR FLOOR MOUNTING BRACKETS (GAS VEHICLES ONLY)

Step 8.1

PLACE BRACKET AGAINST INSIDE FACE OF END PANEL

USING SMALL SLOT, MARK HOLES IN FLOOR FOR END PANEL FLOOR MOUNTING BRACKET

DRILL HOLE IN VEHICLE FLOOR. IF INSTALLING ON OEM OR AFTERMARKET FLOOR, USE HOLE SAW FOR FLOOR SPACER

(04 PLACES)
1/2" DRILL BIT
1 3/16" HOLE SAW

Step 8.2

MARK HOLES ON FLOOR
(04 PLACES)

Step 8.3

REMOVE BOLTS, SLIGHTLY LIFT SHELVING UNIT, SLIDE CENTER SUPPORT FLOOR BRACKET OUT

(04 PLACES)
7/16" SOCKET

Step 8.4

DRILL HOLES IN VEHICLE FLOOR FROM STEP 8.2. IF INSTALLING ON OEM OR AFTERMARKET FLOOR, USE HOLE SAW FOR FLOOR SPACER

(04 PLACES)
1/2" DRILL BIT
1 3/16" HOLE SAW

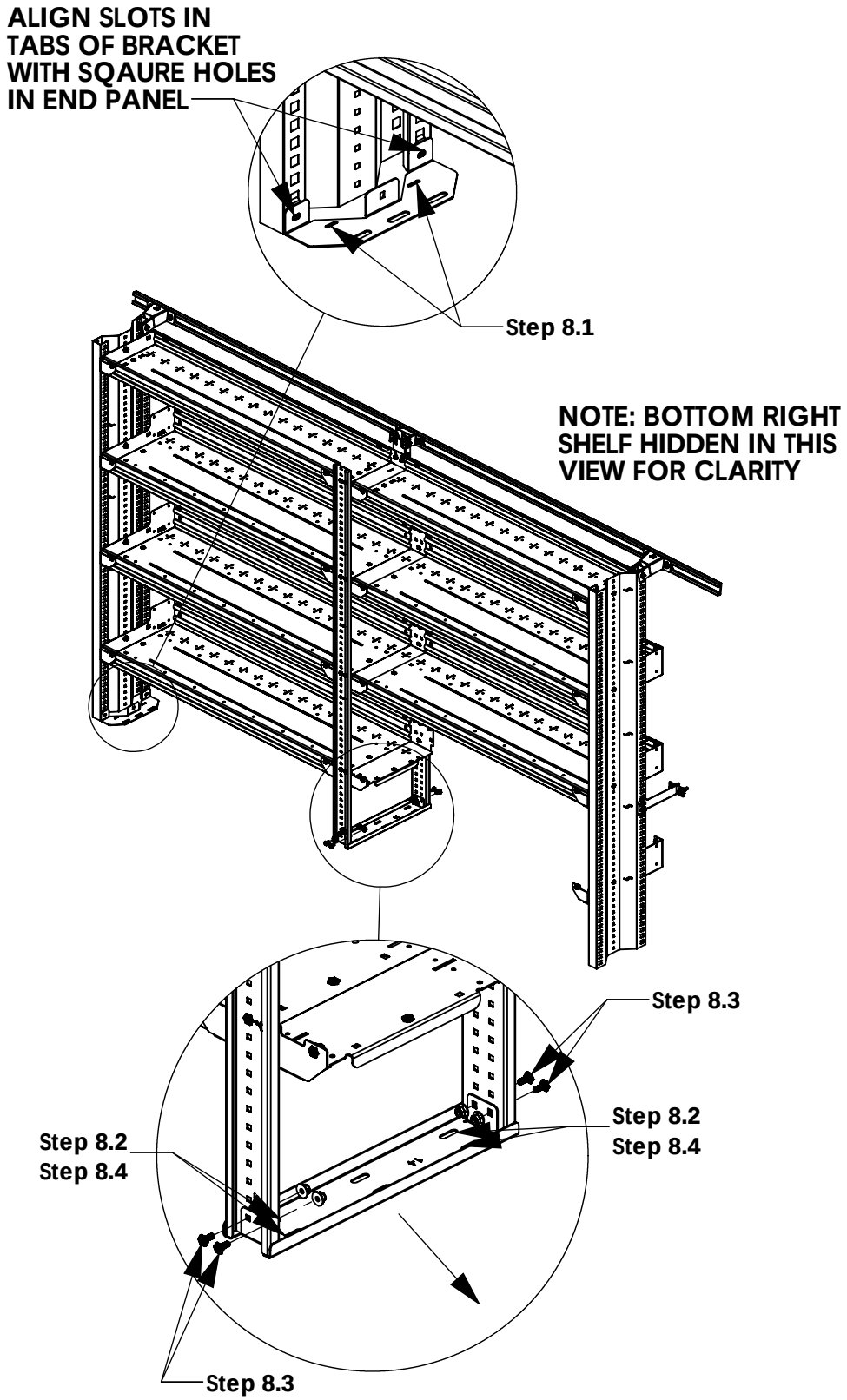

NOTE: SKIP STEPS 8.2 - 8.4 IF NOT INSTALLING CENTER SUPPORT

STEP 9 - ATTACH END PANEL AND CENTER SUPPORT FLOOR MOUNTING BRACKETS

Step 9.1

SET PLUSNUTS IN DRILLED HOLES FROM STEPS 8.1 - 8.4

FAS0091
(04 PLACES) - END PANEL FLOOR MOUNTING BRACKET

(04 PLACES) - CENTER SUPPORT FLOOR MOUNTING BRACKET

SHOWN ON NEXT PAGE

Step 9.2

SLIGHTLY LIFT SHELVING UNIT AND PLACE BRACKET UNDER END PANEL

FULLY TIGHTEN
FAS0994 AND FAS0018
(04 PLACES)
7/16" SOCKET

Step 9.3

REPLACE FASTENERS FROM STEP 8.3

SLIGHTLY LIFT SHELVING UNIT AND PLACE BRACKET UNDER CENTER SUPPORT POSTS

FULLY TIGHTEN
FAS0924 AND FAS0055
(04 PLACES)
7/16" SOCKET

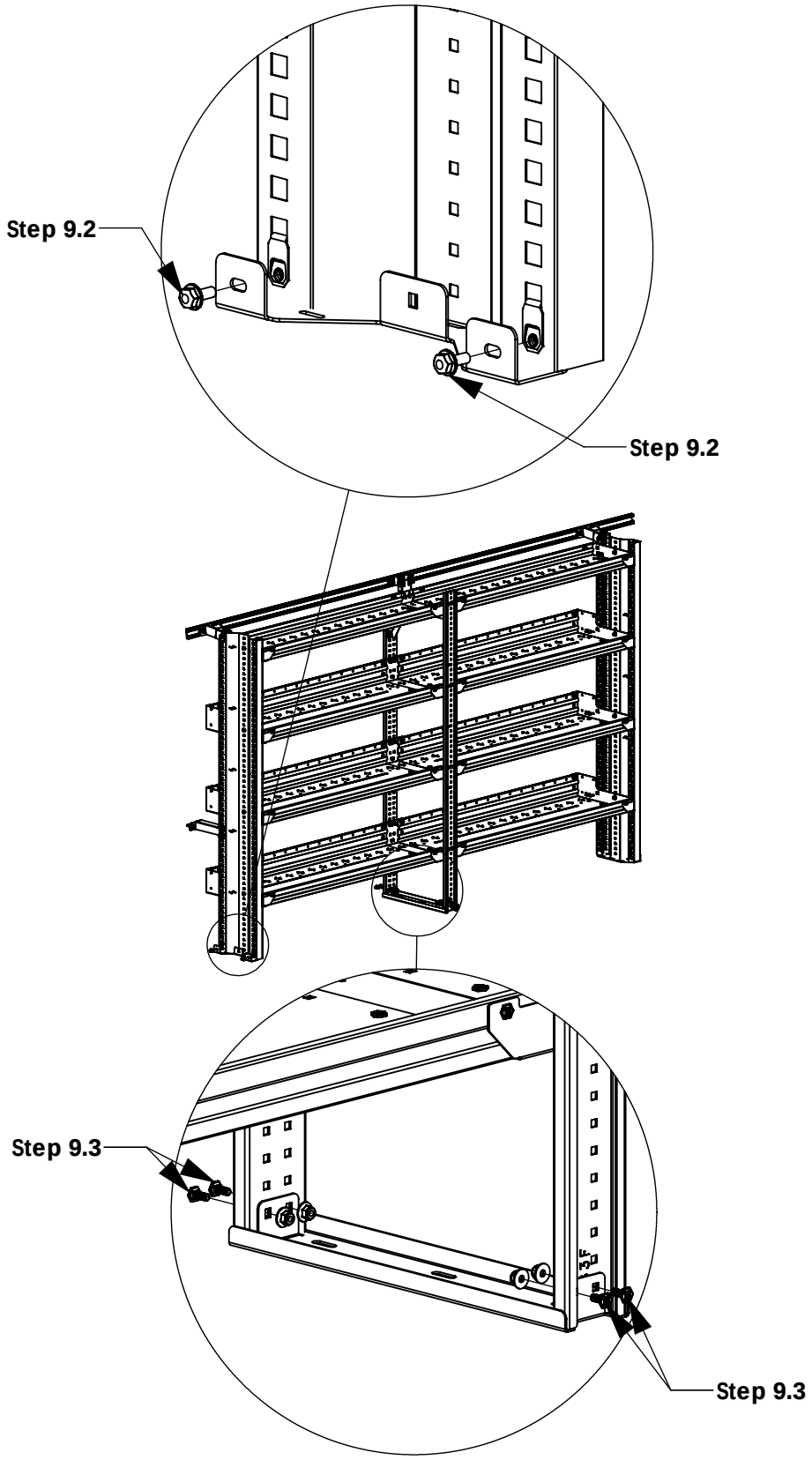

NOTE: SKIP STEP 9.3 IF NOT INSTALLING CENTER SUPPORT

STEP 10 - ATTACH SHELVING UNIT TO VEHICLE FLOOR

Step 10.1

FULLY TIGHTEN
FAS0092, FAS0098, FAS0086, FAS0091 (04 PLACES) 1/2" SOCKET

IF INSTALLING ON AN OEM OR AFTERMARKET FLOOR, OR IF HOLE IS IN RIB OF VEHICLE, USE 03927-1 OR 03927-2 TO CREATE LEVEL MOUNTING SURFACE

Step 10.2

FULLY TIGHTEN
FAS0092, FAS0098, FAS0086, FAS0091 (04 PLACES) 1/2" SOCKET

IF INSTALLING ON AN OEM OR AFTERMARKET FLOOR, OR IF HOLE IS IN RIB OF VEHICLE, USE 03927-1 OR 03927-2 TO CREATE LEVEL MOUNTING SURFACE

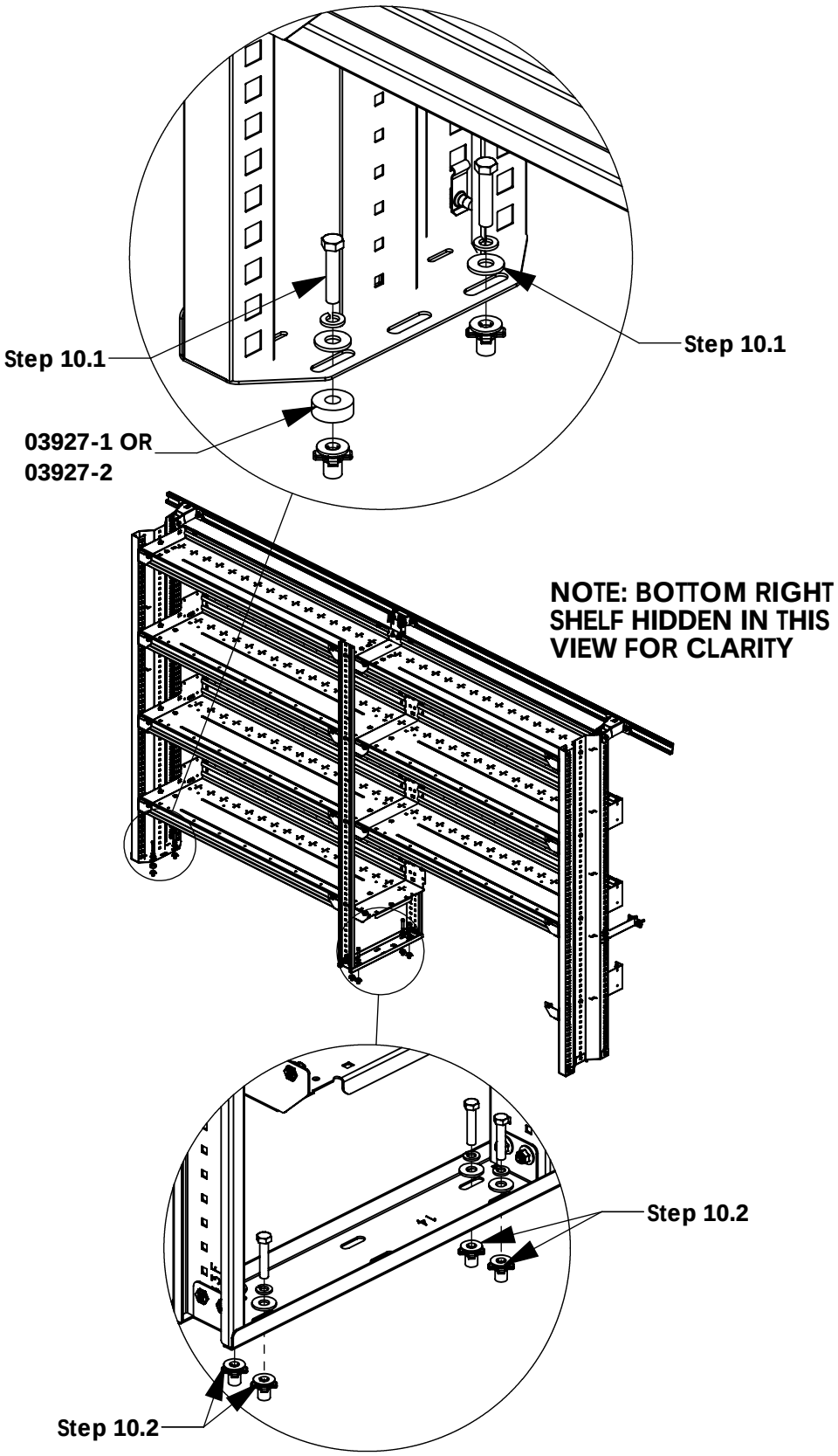

NOTE: SKIP STEP 10.2 IF NOT INSTALLING CENTER SUPPORT

STEP 11 - TIGHTEN ALL LOOSE BOLTS FROM EARLIER STEPS

Step 11.1

FULLY TIGHTEN BOLTS FROM STEPS 5.2 & 5.3

END PANEL RAIL MOUNTING BRACKETS

1/2" SOCKET

Step 11.2

FULLY TIGHTEN BOLTS FROM STEPS 6.1, 6.2A, 6.2B, & 6.3A

CENTER SUPPORT RAIL MOUNTING BRACKET

1/2" SOCKET
7/16" SOCKET
7/16" WRENCH

SKIP IF NOT INSTALLING CENTER SUPPORT

Step 11.2

FULLY TIGHTEN BOLTS FROM STEPS 7A.2, 7B.2, 7C.2, OR 7D.2

END PANEL BELTLINE BRACKETS

7/16" SOCKET
1/2" SOCKET

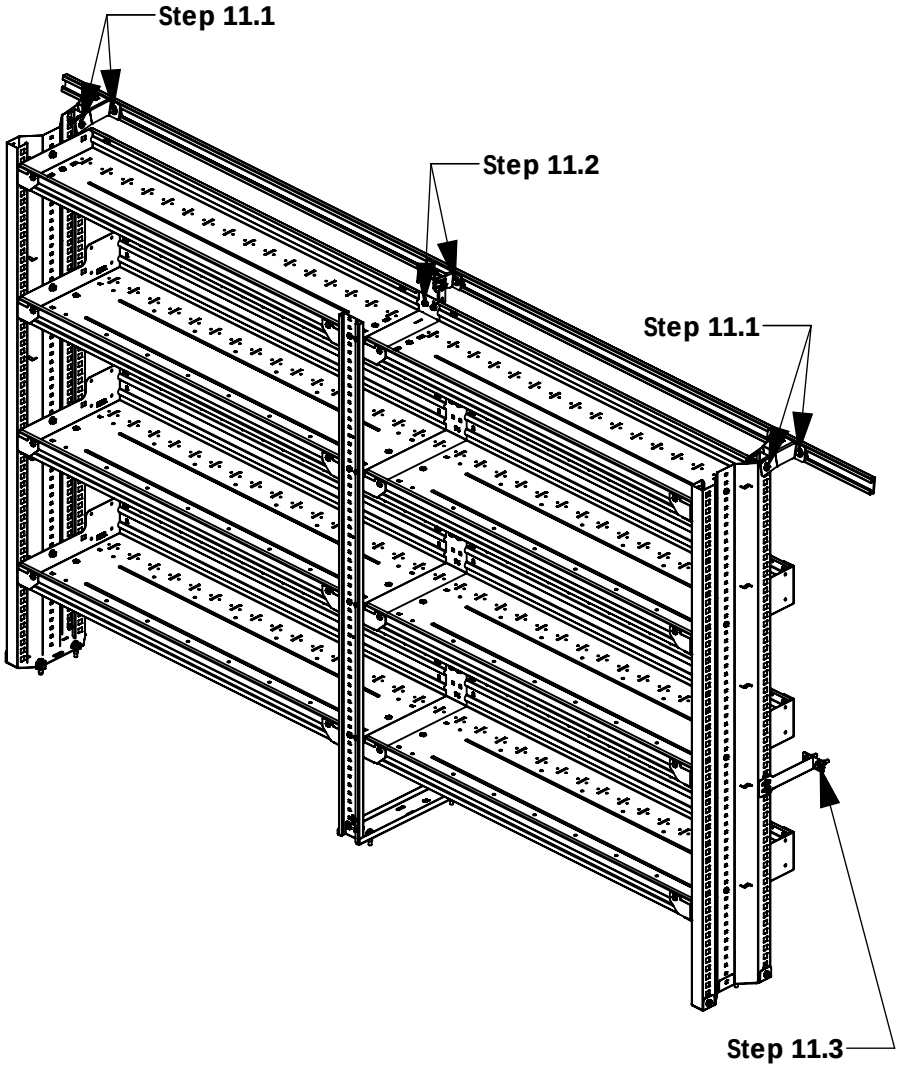

INSTALLATION IS COMPLETE

PLEASE PROCEED TO INSTRUCTIONS FOR ANY ACCESSORIES THAT YOU MAY BE MOUNTING TO YOUR SHELVING UNIT

END PANEL MOUNTING BRACKET KIT, PM, A

PRODUCT WEIGHT

4.62 LBS

VEHICLE

RAM Promaster

CAPACITY

N/A

COLOR

ASC BLUE

CATALOG NUMBER

AEPMBKPMA

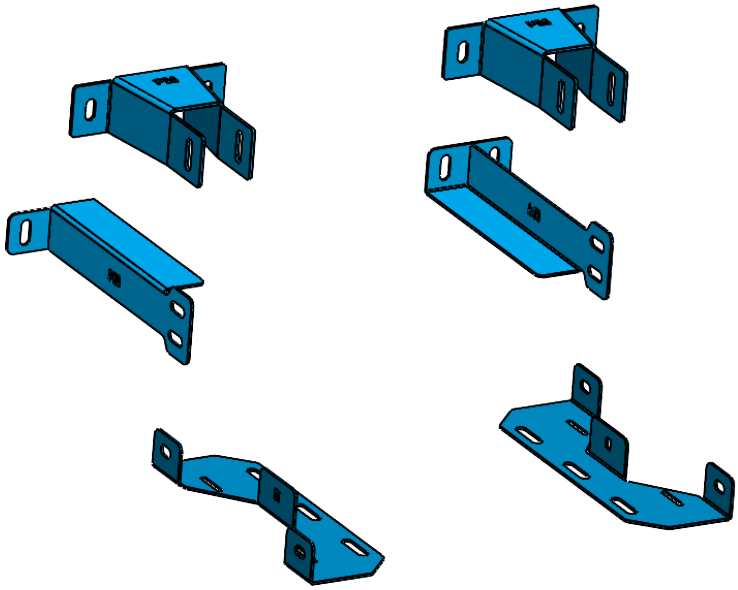

PRODUCT FEATURES

Use this kit to mount Next-Gen Shelving to any RAM Promaster. The brackets integrate with the end panels at the floor, the belt line, and the upper mounting rail.

SEE PAGE 2 FOR APPLICATION NOTES, ACCESSORIES AND OTHER PRODUCTS THAT WORK WITH THIS UNIT.

END PANEL MOUNTING BRACKET KIT, PM, A

CATALOG NUMBER **AEPMBKPMA**

PRODUCT APPLICATION

This kit contains mounting brackets that connect to the end panels to the AD rails and the behicle belt line. AS well as securing the end panels to the floor.

ACCESSORIES THAT WILL WORK WITH THIS PRODUCT

CATALOG NUMBER	*DESCRIPTION (smart)*
AEP1049	END PANEL KIT, 10X49, G
AEP1063	END PANEL KIT, 10X63, G
AEP1068	END PANEL KIT, 10X68, G
ARKPML118DS	RAIL KIT,PM LR 118,DS
ARKPML118	RAIL KIT,PM LR 118
ARKPM136DS	RAIL KIT,PM 136,DS
ARKPM136PS	RAIL KIT,PM 136,PS
ARKPM136	RAIL KIT,PM 136
ARKPMH159DS	RAIL KIT,PM HR 159,DS
ARKPMH159PS	RAIL KIT,PM HR 159,PS
ARKPMH159	RAIL KIT,PM HR 159
ARKPMH159XDS	RAIL KIT,PM HR 159X,DS
ARKPMH159XPS	RAIL KIT,PM HR 159X,PS
ARKPMH159X	RAIL KIT,PM HR 159X

The information contained in this document is the sole property of ADRIAN STEEL COMPANY. ADRIAN STEEL COMPANY retains the right to modify and/or change the product of its design at any time with prior notification.

ADRIAN STEEL
Cargo Management Solutions for Commercial Vehicles

SHELF KIT, 2T, 14X60, G, 4

PRODUCT WEIGHT

52.53 LBS

WIDTH X DEPTH X HEIGHT

See description below

CAPACITY

50LBS. PER SQ. FT., PER SHELVING

COLOR

GRAY

CATALOG NUMBER

ASFK2T1460G4

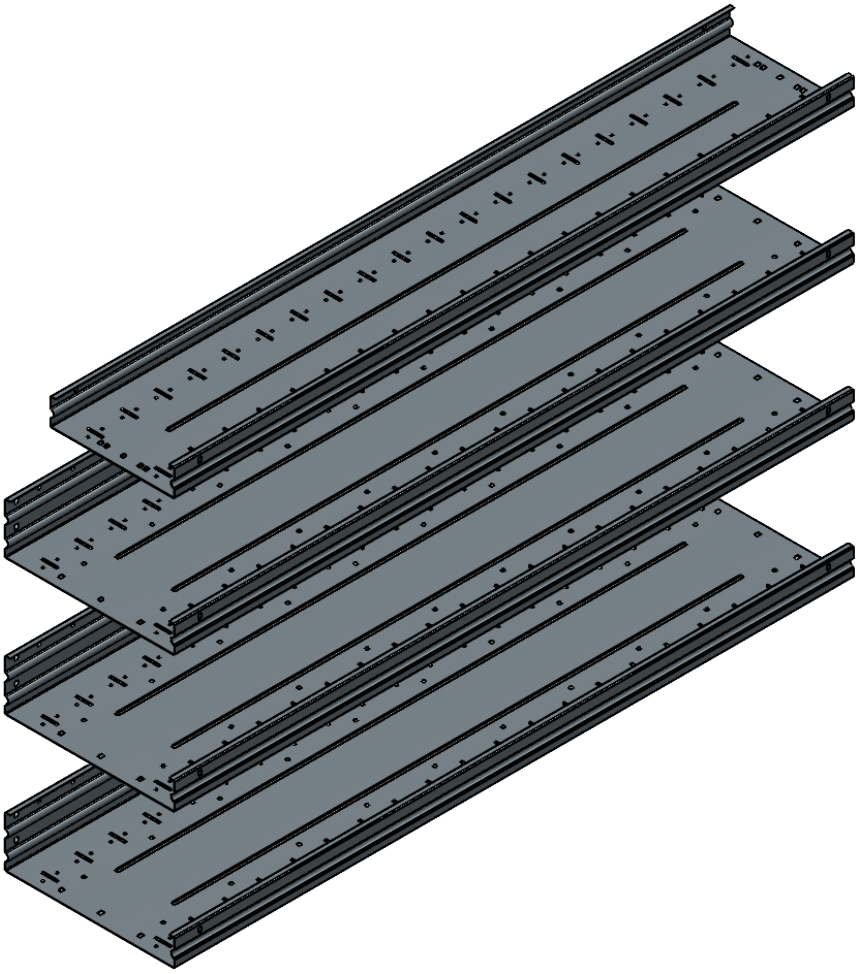

PRODUCT FEATURES

This kit contains a set of shelves. The shelves rest on the end caps which connect them to the end panel. The shelves have stiffening features for additional strength at the front lip, rear lip, and on the base of the shelf. The shelves have a standard hole pattern for mounting common accessories. This kit contains three 14" x 60" shelves and one 10" x 60" shelf.

SEE PAGE 2 FOR APPLICATION NOTES, ACCESSORIES AND OTHER PRODUCTS THAT WORK WITH THIS UNIT.

ADRIAN STEEL
Cargo Management Solutions for Commercial Vehicles

SHELF KIT, 2T, 14X60, G, 4

CATALOG NUMBER **ASFK2T1460G4**

PRODUCT APPLICATION

This kit contains 4 shelves, which are typical for use with 63" end panels. However, this kit is compatible with any height of end panel.

ACCESSORIES THAT WILL WORK WITH THIS PRODUCT

CATALOG NUMBER	*DESCRIPTION (smart)*
BIN614	BIN, 6W X 14D
BIN1214	BIN, 12W X 14D
DIVK141	SHELF DIVIDER KIT, 14D,1
DIVK144	SHELF DIVIDER KIT, 14D,4
DIVK148	SHELF DIVIDER KIT, 14D,8
AECK2T143	END CAP KIT, 2T,14D, A, 3
AECK2T144	END CAP KIT, 2T,14D, A, 4
AECK2T145	END CAP KIT, 2T,14D, A, 5
ADK1054	DOOR KIT, 10X54, A
ADURK18	DRAWER UNIT, RISER KIT, 18
ADURK24	DRAWER UNIT, RISER KIT, 24
ADUK1418A2T	DRAWER UNIT, 14X18, A, 2T
ADUK1418A3C	DRAWER UNIT, 14X18, A, 3C
ADUK1418A4S	DRAWER UNIT, 14X18, A, 4S
ADUK1424A2T	DRAWER UNIT, 14X24, A, 2T
ADUK1424A3C	DRAWER UNIT, 14X24, A, 3C
ADUK1424A4S	DRAWER UNIT, 14X24, A, 4S

The information contained in this document is the sole property of ADRIAN STEEL COMPANY. ADRIAN STEEL COMPANY retains the right to modify and/or change the product of its design at any time with prior notification.