ADRIAN STEEL
Cargo Management Solutions for Commercial Vehicles

# CENTER SUPPORT KIT, 14X68, A, 5

*PRODUCT WEIGHT*

**31.40 LBS**

*WIDTH X DEPTH X HEIGHT*

**6.25" X 14" X 68"**

*CAPACITY*

**SEE SHELF KIT**

*COLOR*

**ASC BLUE & GRAY**

*CATALOG NUMBER*

**ACSK1468A5**

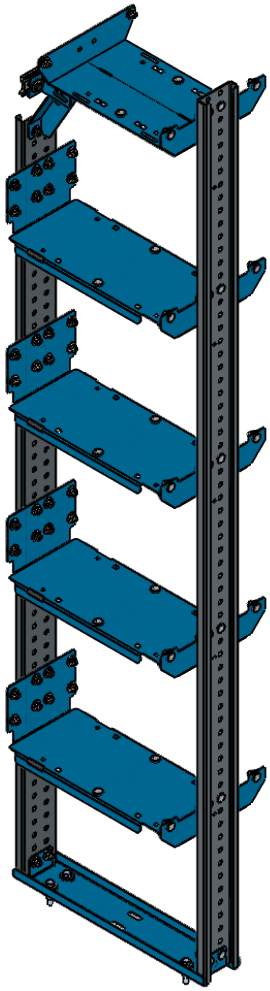

## PRODUCT FEATURES

**THIS KIT IS USED TO CREATE A SHELVING UNIT WITH A LENGTH OF OVER 72" BY JOINING TWO SETS OF SHELVES. USE THIS INCONJUNCTION WITH END PANEL, END CAP, SHELF, AND MOUNTING KITS TO BUILD A FULL SHELVING UNIT. THIS KIT IS MEANT TO SUPPORT A 4 SHELF KIT OF 14" SHELVES. THE LOWER SHELVES CAN BE ADJUSTED AT 1" INCREMENTS HOWEVER THE TOP SHELF WILL BE FIXED DEPENDING ON THE VEHICLE IT IS INSTALLED INTO. USE THIS KIT IN HIGH HEIGHT VEHICLES SUCH AS FORD TRANSIT HIGH ROOF, RAM PROMASTER HIGH ROOF, AND MERCEDES SPRINTER HIGH ROOF.**

**SEE PAGE 2 FOR APPLICATION NOTES, ACCESSORIES AND OTHER PRODUCTS THAT WORK WITH THIS UNIT.**

ADRIAN STEEL
Cargo Management Solutions for Commercial Vehicles

# CENTER SUPPORT KIT, 14X68, A, 5

*CATALOG NUMBER* **ACSK1468A5**

*PRODUCT APPLICATION*

**TO BE USED WHEN SHELVING LENGTHS EXTEND OVER 72" LONG, BY CONNECTING TWO SETS OF SHELVES. INSTALLED USING AN UPPER AD RAIL IN FULL SIZE VANS.**

*ACCESSORIES THAT WILL WORK WITH THIS PRODUCT*

| *CATALOG NUMBER* | *DESCRIPTION (smart)* |
|---|---|
| | NO OTHER ACCESSORIES ARE SPECIFICALLY DESIGNED FOR THIS PRODUCT |
| | |
| | |
| | |
| | |
| | |
| | |
| | |
| | |
| | |
| | |
| | |
| | |
| | |

**The information contained in this document is the sole property of ADRIAN STEEL COMPANY. ADRIAN STEEL COMPANY retains the right to modify and/or change the product of its design at any time with prior notification.**

# END CAP KIT, 2T, 14D, A, 5

*PRODUCT WEIGHT*

**16.01 LBS**

*WIDTH X DEPTH X HEIGHT*

**10" x 3.125 TOP END CAP**
**14" X 3.25 LOWER END CAPS**

*CAPACITY*

**N/A**

*COLOR*

**ASC BLUE**

*CATALOG NUMBER*

**AECK2T14A5**

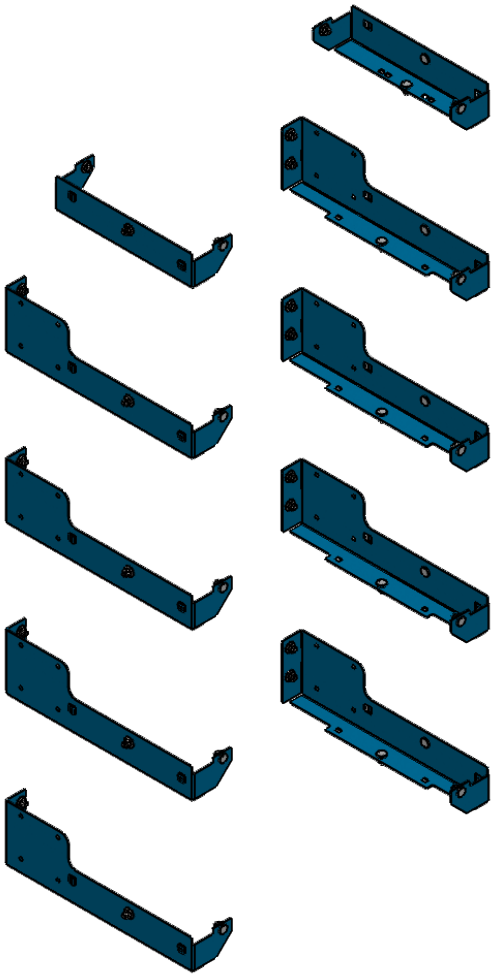

## PRODUCT FEATURES

**This kit contains end caps that connect the shelves to the end panels. The end caps clip into the square cut-outs on the end panels and are secured using a single set of fasteners. The end caps can be mounted to the end panels at any height as long as the vehicle body allows. This kit contains two sets (left and right) of 14" end caps and one set of 10" end caps.**

**SEE PAGE 2 FOR APPLICATION NOTES, ACCESSORIES AND OTHER PRODUCTS THAT WORK WITH THIS UNIT.**

# END CAP KIT, 2T, 14D, A, 5

*CATALOG NUMBER* **AECK2T14A5**

*PRODUCT APPLICATION*

**This kit contains 5 sets of end caps, which are typical for use with 68" end panels. However, this kit is also compatible with 63" end panel.**

*ACCESSORIES THAT WILL WORK WITH THIS PRODUCT*

| *CATALOG NUMBER* | *DESCRIPTION (smart)* |
|---|---|
| AEPK1049 | END PANEL KIT, 10X49, G |
| AEPK1063 | END PANEL KIT, 10X63, G |
| AEPK1068 | END PANEL KIT, 10X68, G |
| AEPK1068-PM | END PANEL KIT, 10X68, PM, G |
| ASFK2T1424G5 | SHELF KIT, 2T, 14X24, G, 5 |
| ASFK2T1430G5 | SHELF KIT, 2T, 14X30, G, 5 |
| ASFK2T1436G5 | SHELF KIT, 2T, 14X36, G, 5 |
| ASFK2T1442G5 | SHELF KIT, 2T, 14X42, G, 5 |
| ASFK2T1448G5 | SHELF KIT, 2T, 14X48, G, 5 |
| ASFK2T1454G5 | SHELF KIT, 2T, 14X54, G, 5 |
| ASFK2T1460G5 | SHELF KIT, 2T, 14X60, G, 5 |
| ASFK2T1466G5 | SHELF KIT, 2T, 14X66, G, 5 |
| ASFK2T1472G5 | SHELF KIT, 2T, 14X72, G, 5 |
| | |
| | |

**The information contained in this document is the sole property of ADRIAN STEEL COMPANY. ADRIAN STEEL COMPANY retains the right to modify and/or change the product of its design at any time with prior notification.**

# END PANEL KIT, 10X68, G

*PRODUCT WEIGHT*

**22.71 LBS**

*WIDTH X DEPTH X HEIGHT*

**SEE KIT**

*CAPACITY*

**N/A**

*COLOR*

**GRAY**

*CATALOG NUMBER*

**AEPK1068G**

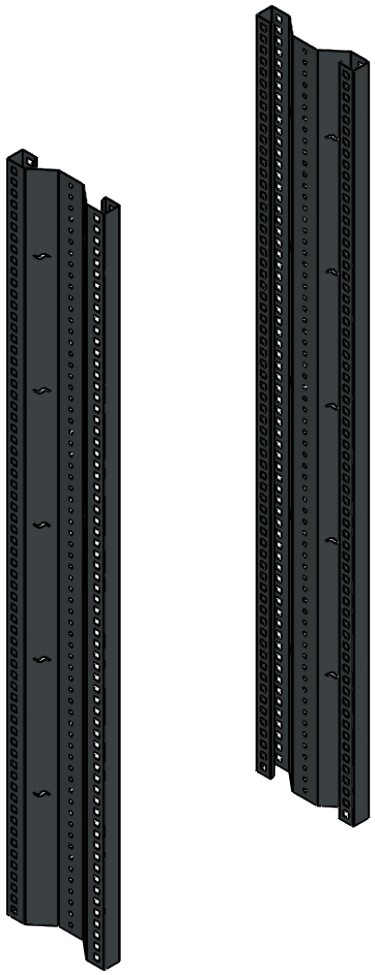

PRODUCT FEATURES

**This kit contains two 68" tall end panels. The end panels have square holes that are used to mount the end caps to support the shelves. These holes are patterned at 1" increments to all for adjustment of the end caps and shelves. Use the brackets included in the mounting bracket kit to attach the end panels to the vehicle. The standard width of 10" is common between all vehicle platforms and shelf depths due to the cantilevered nature of the shelves.**

SEE PAGE 2 FOR APPLICATION NOTES, ACCESSORIES AND OTHER PRODUCTS THAT WORK WITH THIS UNIT.

# END PANEL KIT, 10X68, G

*CATALOG NUMBER* **AEPK1068G**

*PRODUCT APPLICATION*

**This end panel is designed to be installed in Transit High Roof, Ram Promaster High Roof, and Mercedes Sprinter High Roof.**

*ACCESSORIES THAT WILL WORK WITH THIS PRODUCT*

| *CATALOG NUMBER* | *DESCRIPTION (smart)* |
|---|---|
| AEPMBKFTA | END PANEL MOUNTING BRACKET KIT, FT, A |
| AEPMBKGMA | END PANEL MOUNTING BRACKET KIT, GM, A |
| AEPMBKPMA | END PANEL MOUNTING BRACKET KIT, PM, A |
| AEPMBKSPA | END PANEL MOUNTING BRACKET KIT, SP, A |
| AECK2T143 | END CAPS KIT, 2T, 14D, A, 3 |
| AECK2T144 | END CAPS KIT, 2T, 14D, A, 4 |
| AECK2T145 | END CAPS KIT, 2T, 14D, A, 5 |
| AECK2T163 | END CAPS KIT, 2T, 16D, A, 3 |
| AECK2T164 | END CAPS KIT, 2T, 16D, A, 3 |
| AECK2T165 | END CAPS KIT, 2T, 16D, A, 3 |
| | |
| | |
| | |
| | |
| | |

**The information contained in this document is the sole property of ADRIAN STEEL COMPANY. ADRIAN STEEL COMPANY retains the right to modify and/or change the product of its design at any time with prior notification.**

**THIS DOCUMENT LISTS THE PRODUCT STRUCTURE OF THE VARIOUS MODULAR KITS TO ASSEMBLE YOUR SHELVING UNIT OF THE**

# ADRIAN SHELVING PRODUCT LINE

**TO VIEW INSTRUCTIONS OF HOW TO ASSEMBLE YOUR SHELVING UNIT, PLEASE REFER TO PART#: INS-ASHELVING**

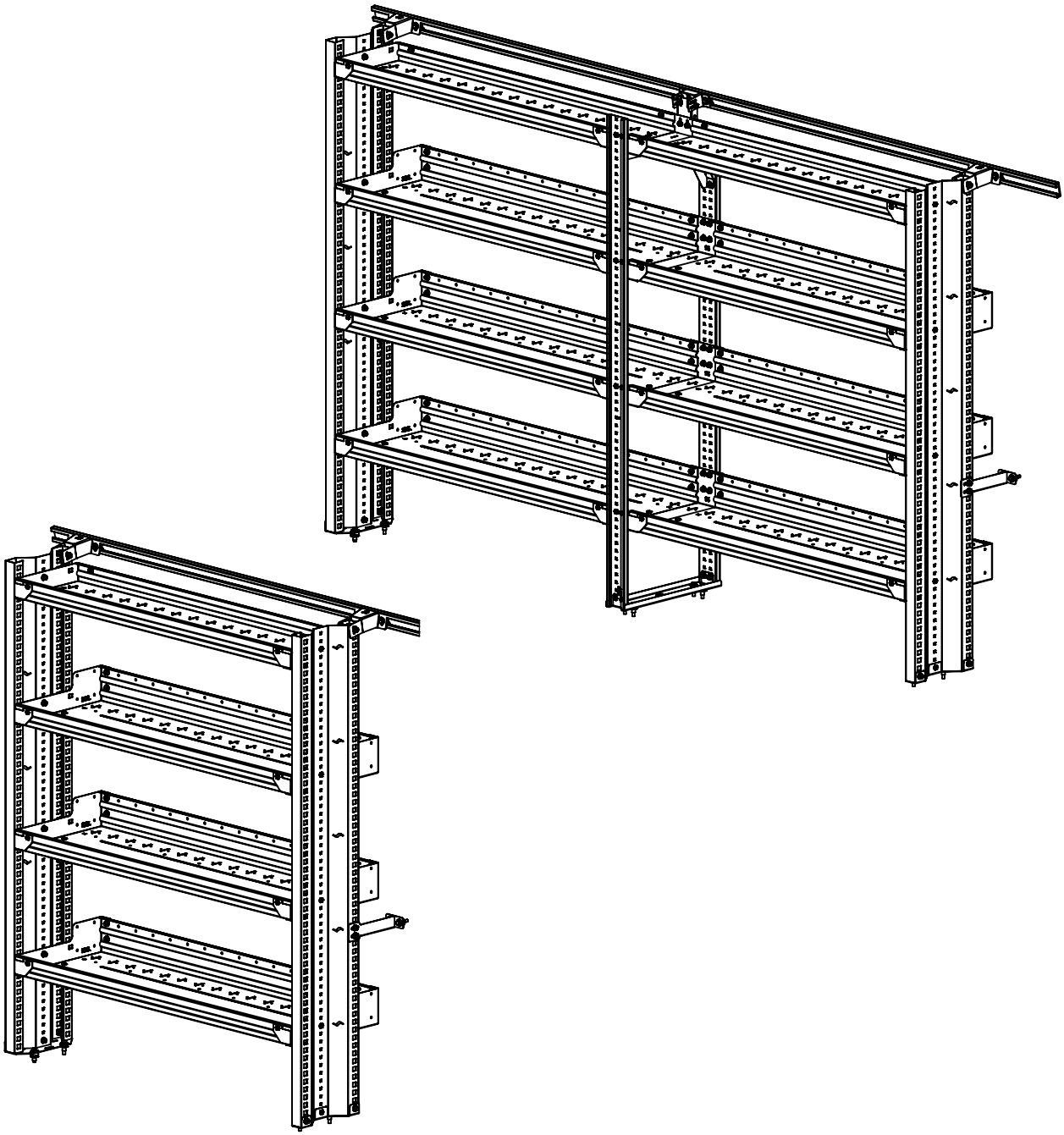

# END PANEL KIT PRODUCT STRUCTURES

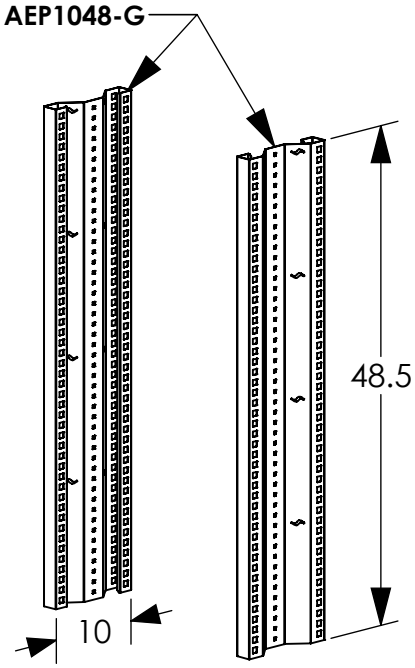


**AEPK1048G**

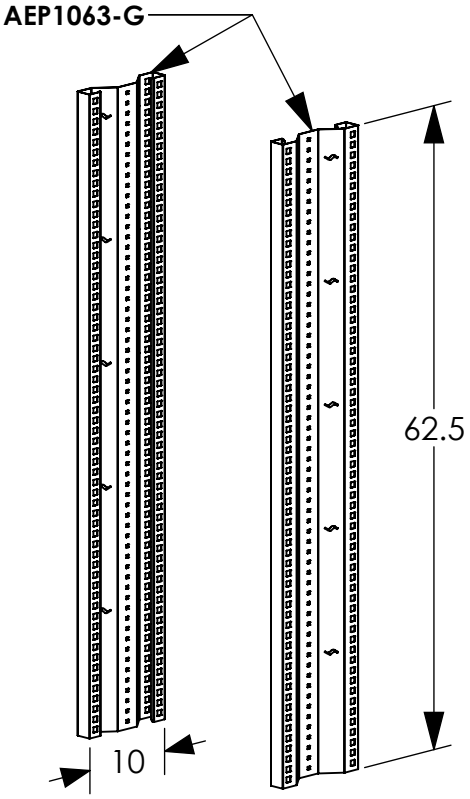


**AEPK1063G**

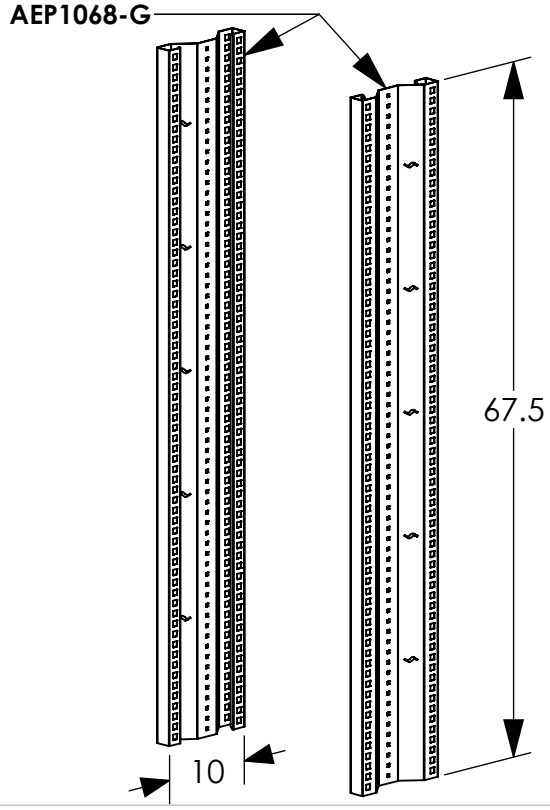


**AEPK1068G**

# 14 INCH END CAP KIT PRODUCT STRUCTURES

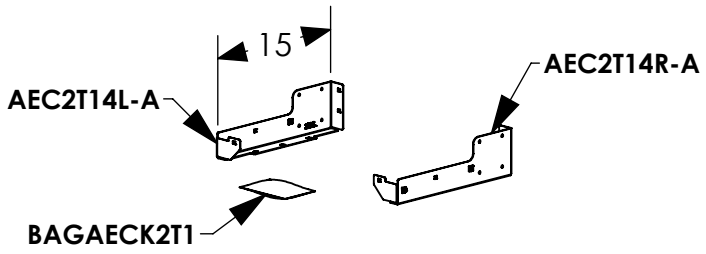


## AECK2T14A1

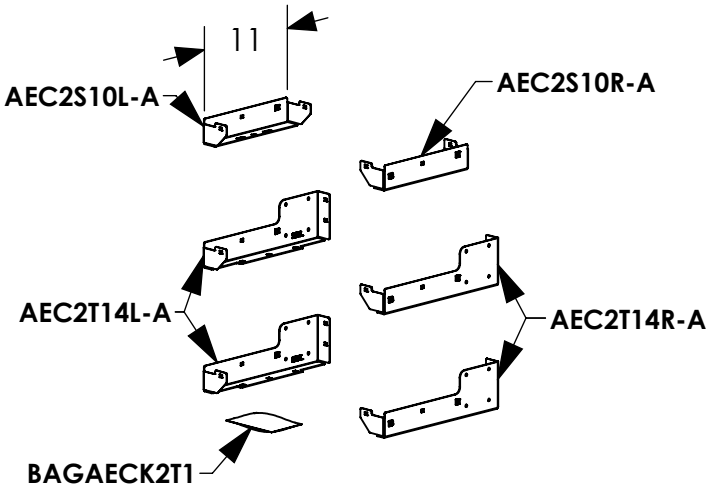


## AECK2T14A3

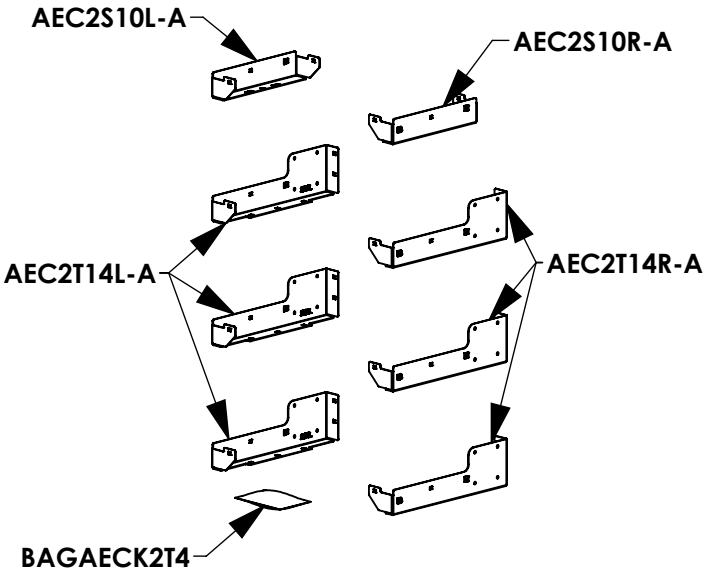


## AECK2T14A4

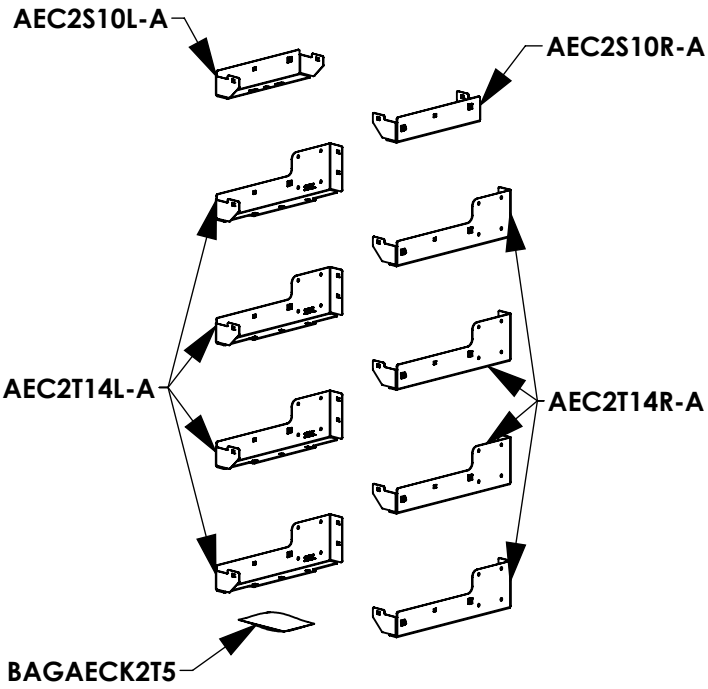


## AECK2T14A5

# 16 INCH END CAP KIT PRODUCT STRUCTURES

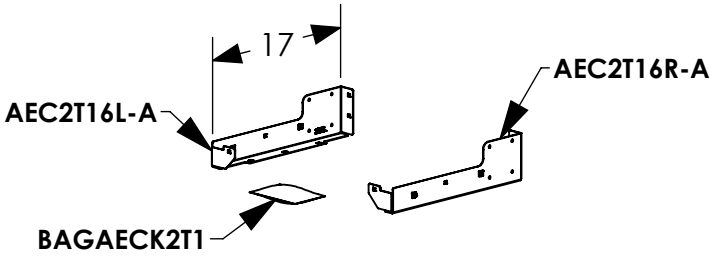


## AECK2T16A1

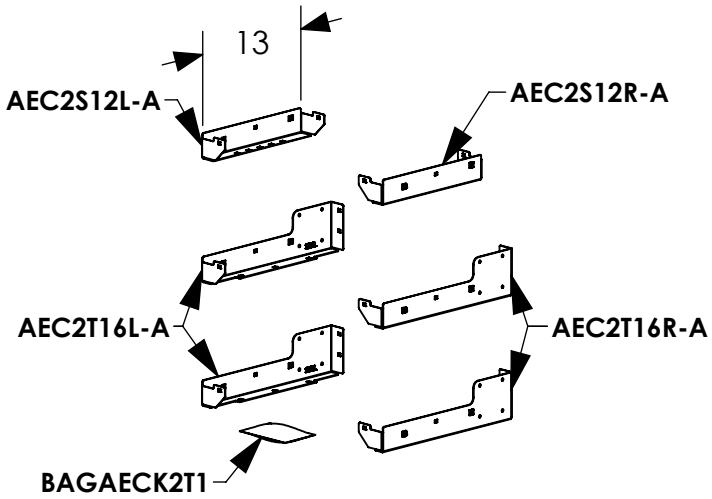


## AECK2T16A3

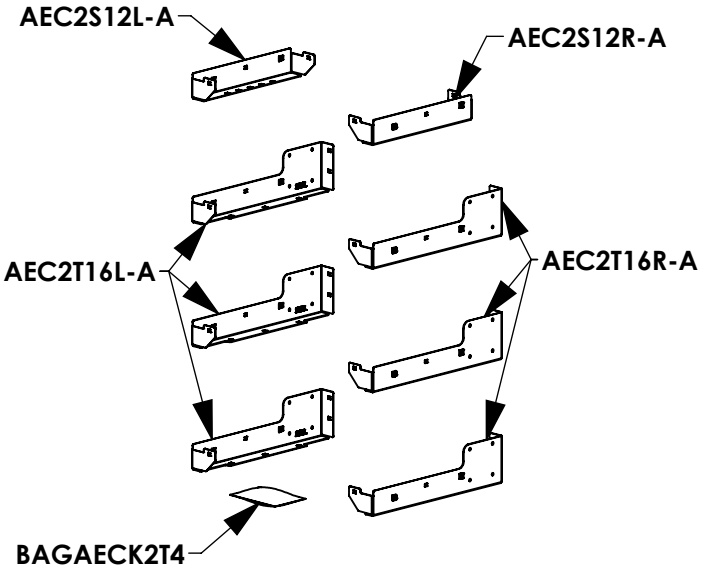


## AECK2T16A4

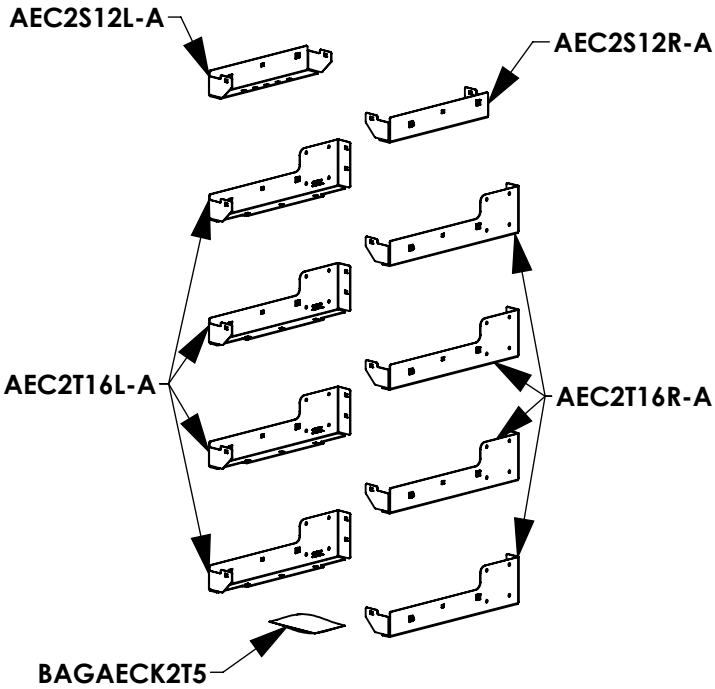


## AECK2T16A5

# 18 INCH END CAP KIT PRODUCT STRUCTURES

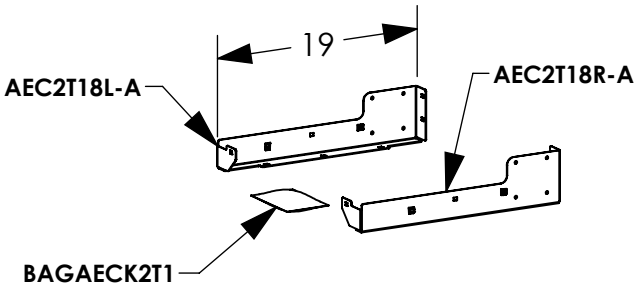


## AECK2T18A1

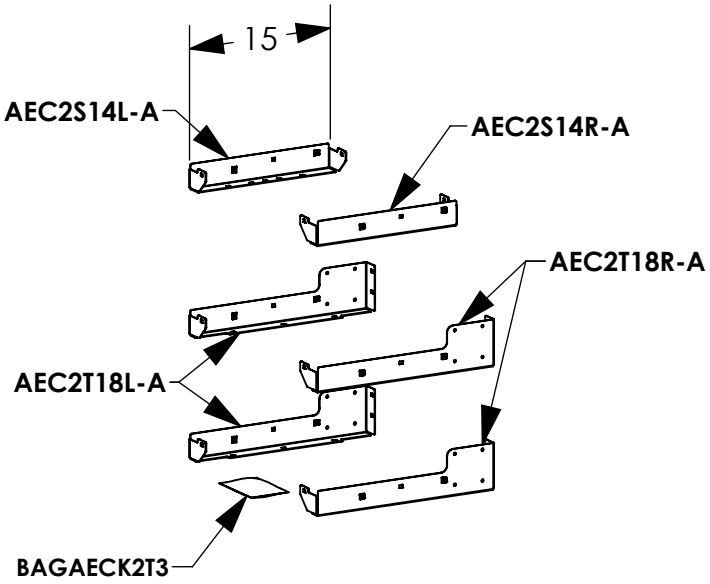


## AECK2T18A3

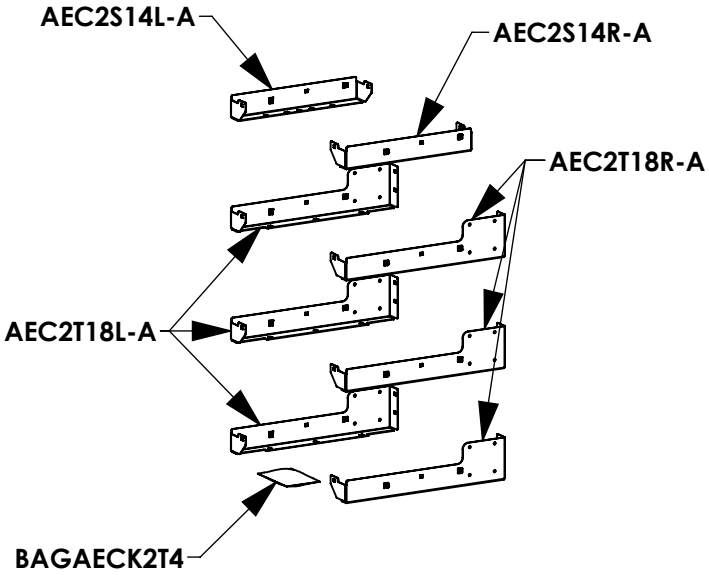


## AECK2T18A4

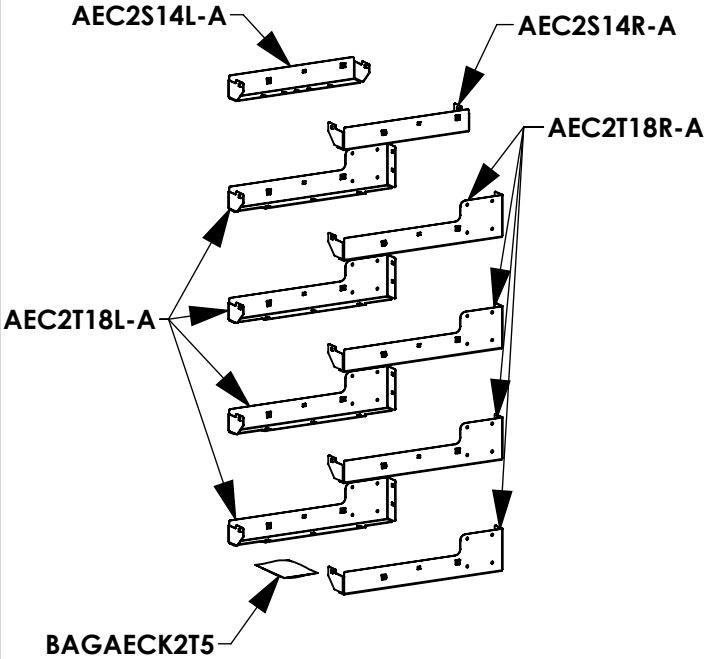


## AECK2T18A5

# 14 INCH DEEP SHELF KIT PRODUCT STRUCTURES

**NOTE: SHELF LENGTHS (NOTATED AS ##) RANGE FROM 24" - 72", AT 6" INCREMENTS**
**EXAMPLE SHELF PART NUMBER: ASF2T1448-G**
**EXAMPLE SHELF KIT PART NUMBER: ASFK2T1448G1**

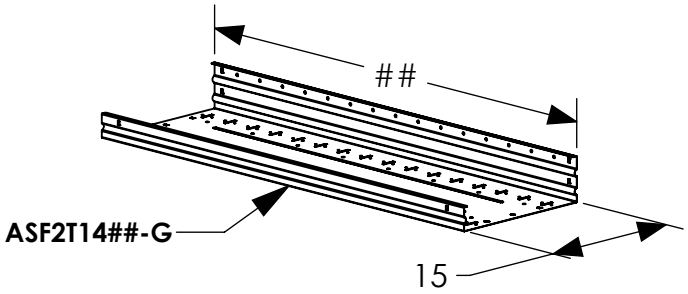


## ASFK2T14##G1

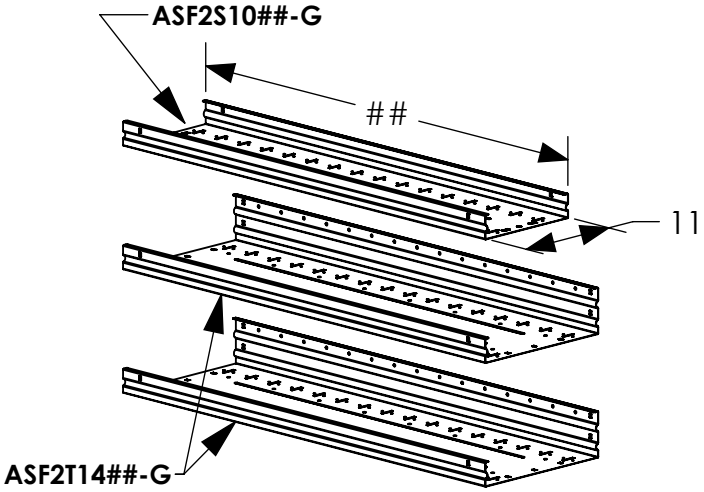


## ASFK2T14##G3

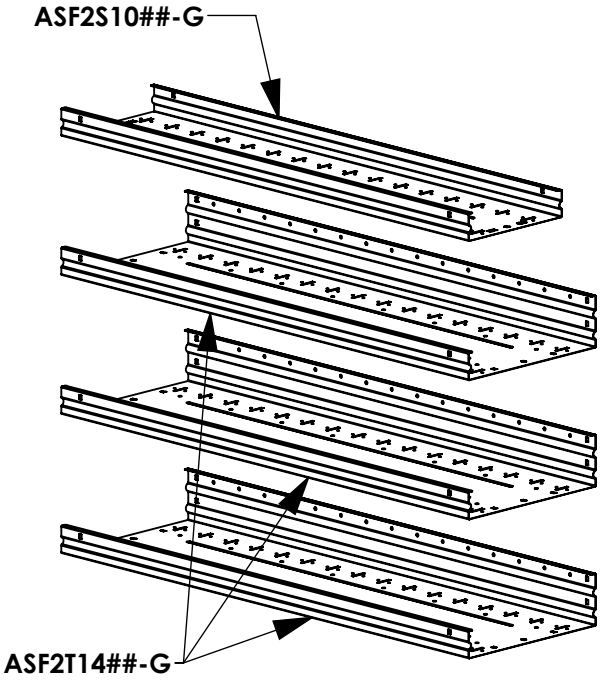


## ASFK2T14##G4

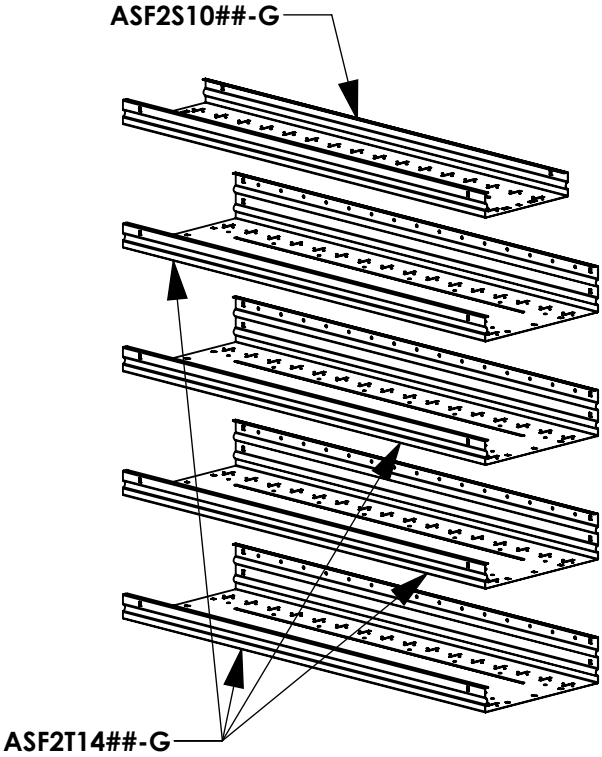


## ASFK2T14##G5

# 16 INCH DEEP SHELF KIT PRODUCT STRUCTURES

**NOTE: SHELF LENGTHS (NOTATED AS ##) RANGE FROM 24" - 72", AT 6" INCREMENTS**
**EXAMPLE SHELF PART NUMBER: ASF2T1648-G**
**EXAMPLE SHELF KIT PART NUMBER: ASFK2T1648G1**

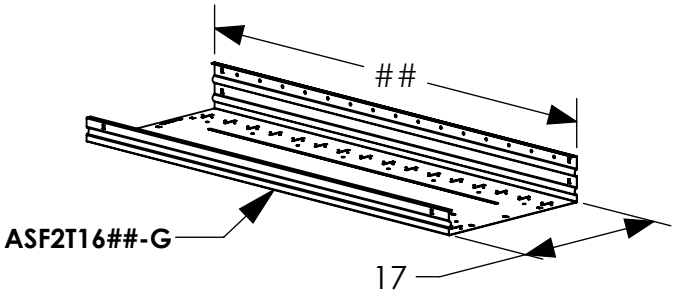


## ASFK2T16##G1

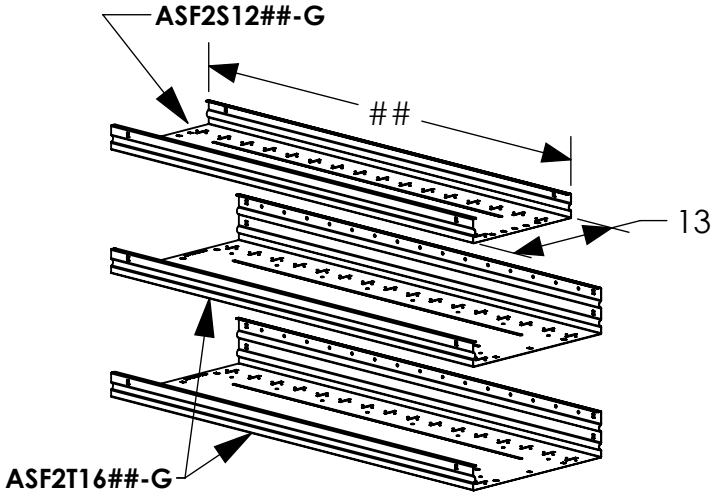


## ASFK2T16##G3

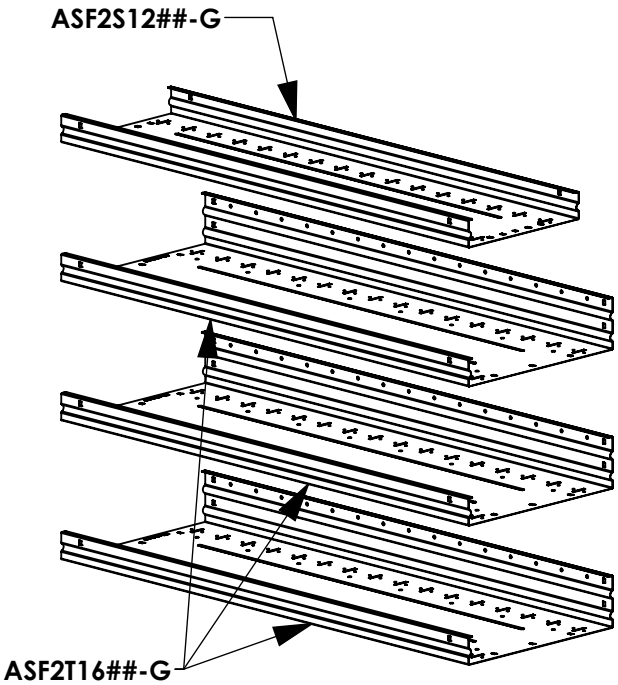


## ASFK2T16##G4

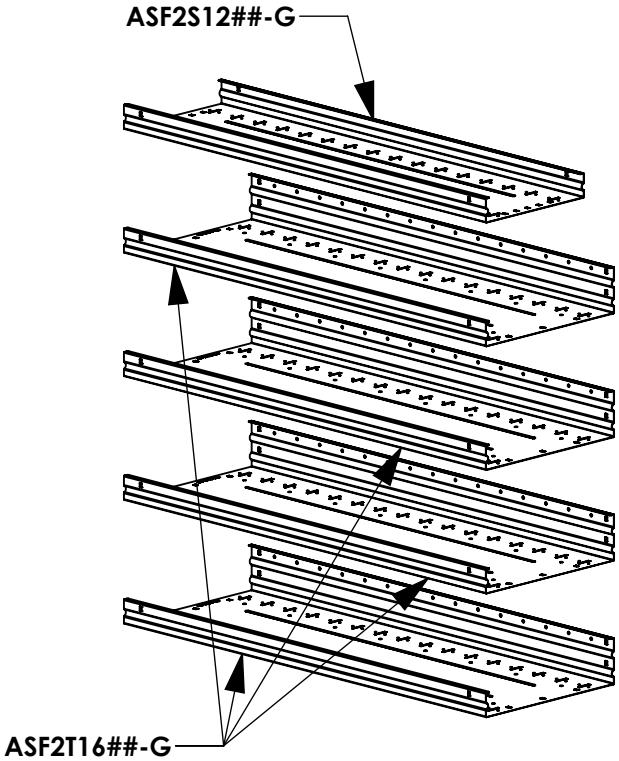


## ASFK2T16##G5

# 16 INCH DEEP SHELF KIT PRODUCT STRUCTURES

**NOTE: SHELF LENGTHS (NOTATED AS ##) RANGE FROM 24" - 72", AT 6" INCREMENTS**
**EXAMPLE SHELF PART NUMBER: ASF2T1848-G**
**EXAMPLE SHELF KIT PART NUMBER: ASFK2T1848G1**

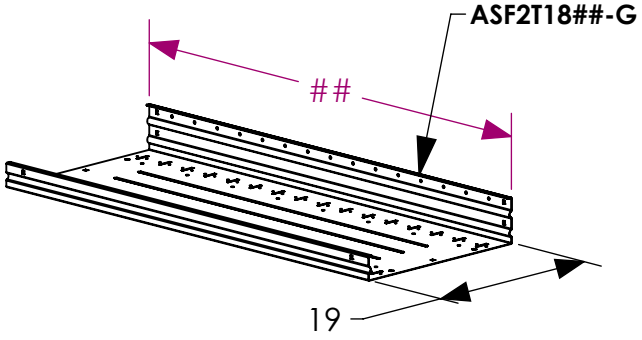


**ASFK2T18##G1**

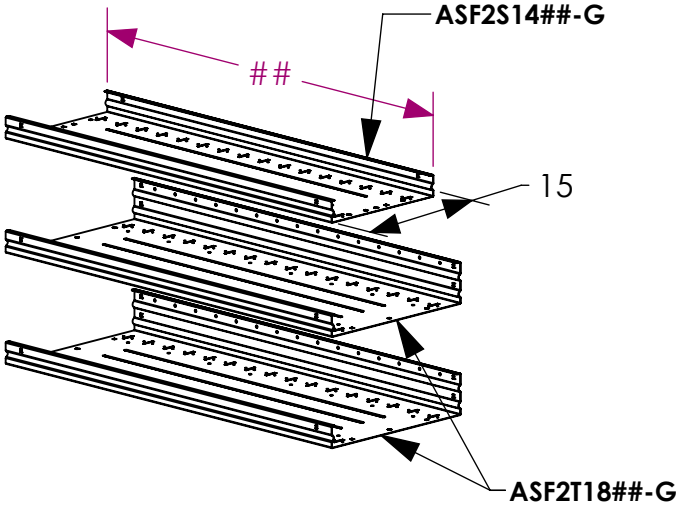


**ASFK2T18##G3**

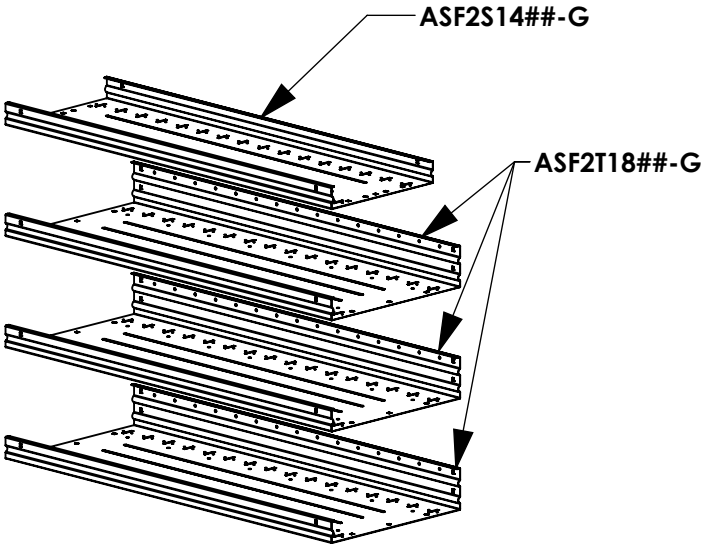


**ASFK2T18##G4**

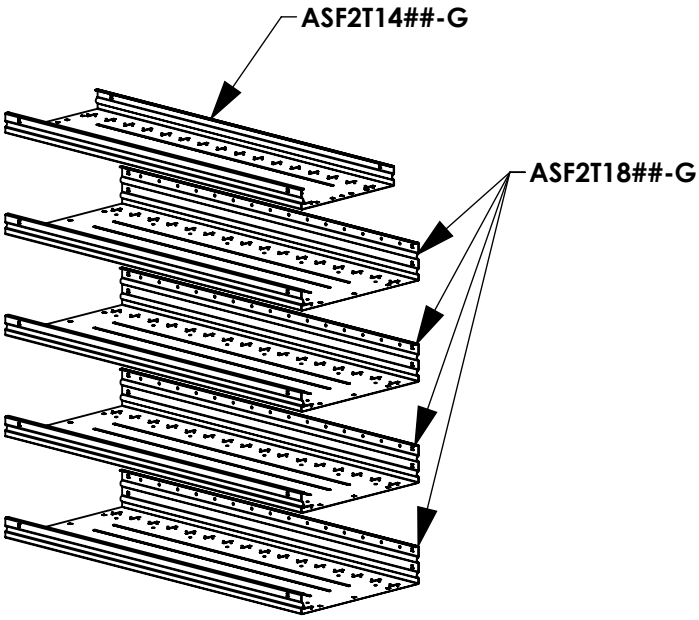


**ASFK2T18##G5**

# 14 IN DEEP CENTER SUPPORT KIT PRODUCT STRUCTURES

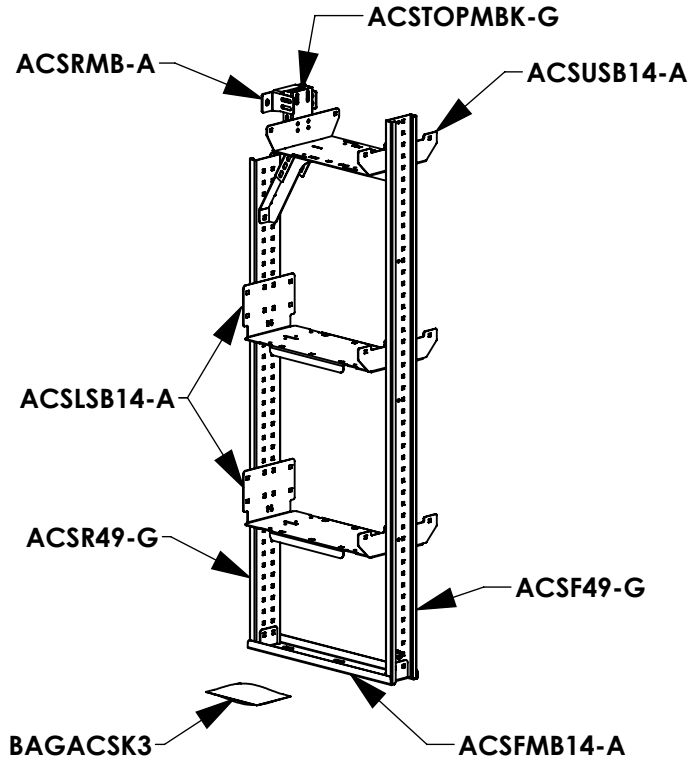


## ACSK1449A3

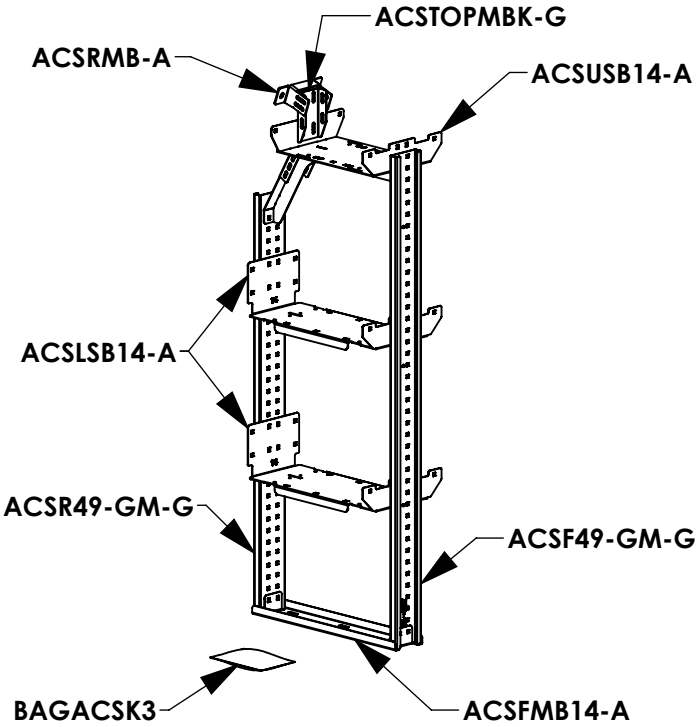


## ACSK1449-GMA3

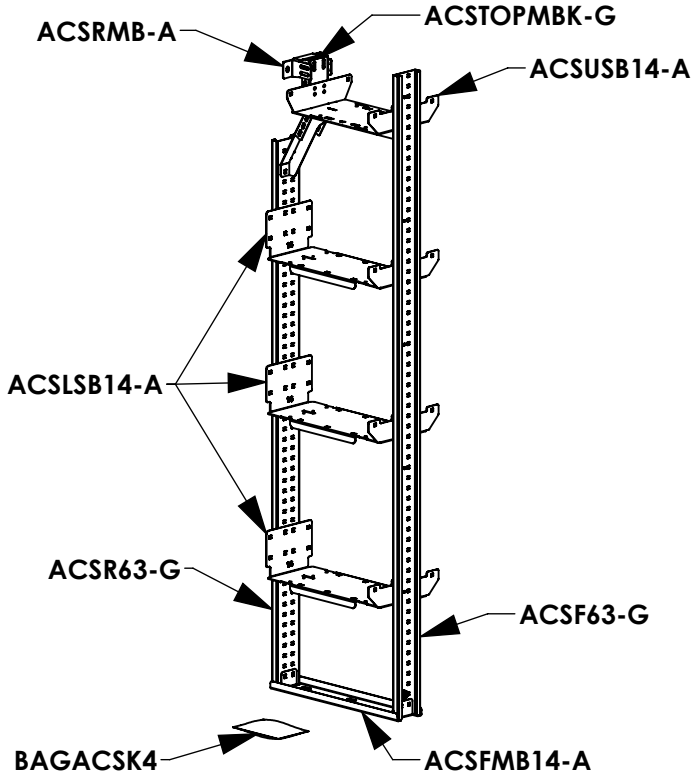


## ACSK1463A4

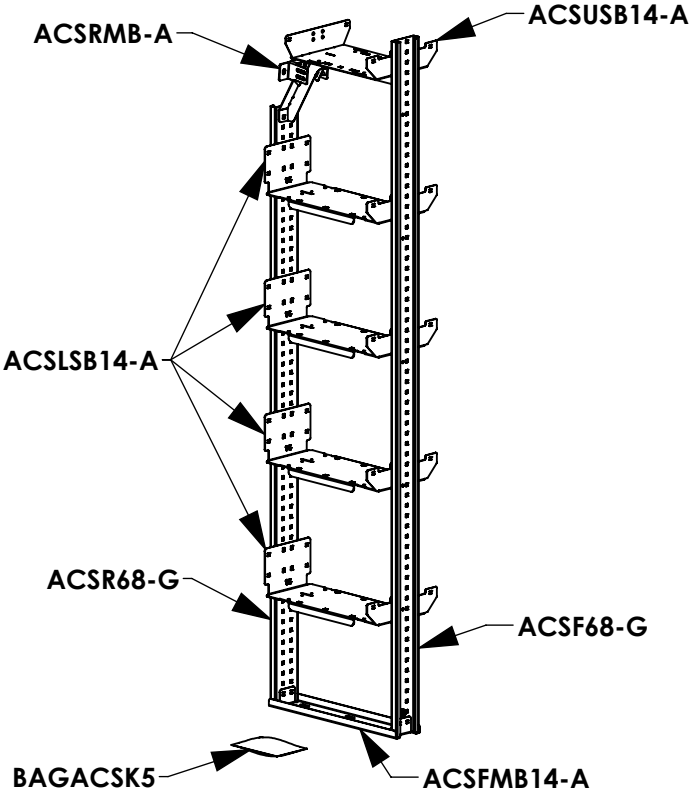


## ACSK1468A5

# 16 IN DEEP CENTER SUPPORT KIT PRODUCT STRUCTURES

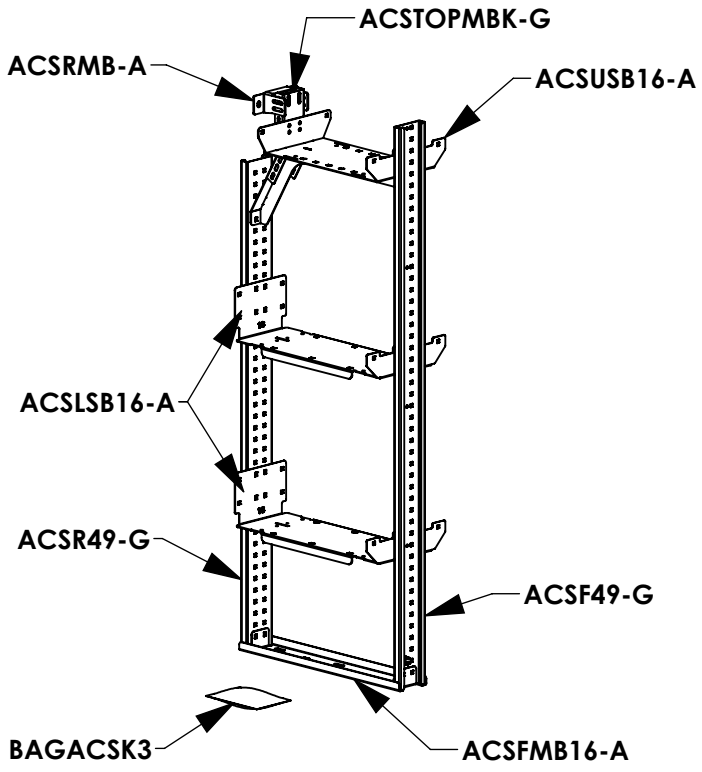


## ACSK1649A3

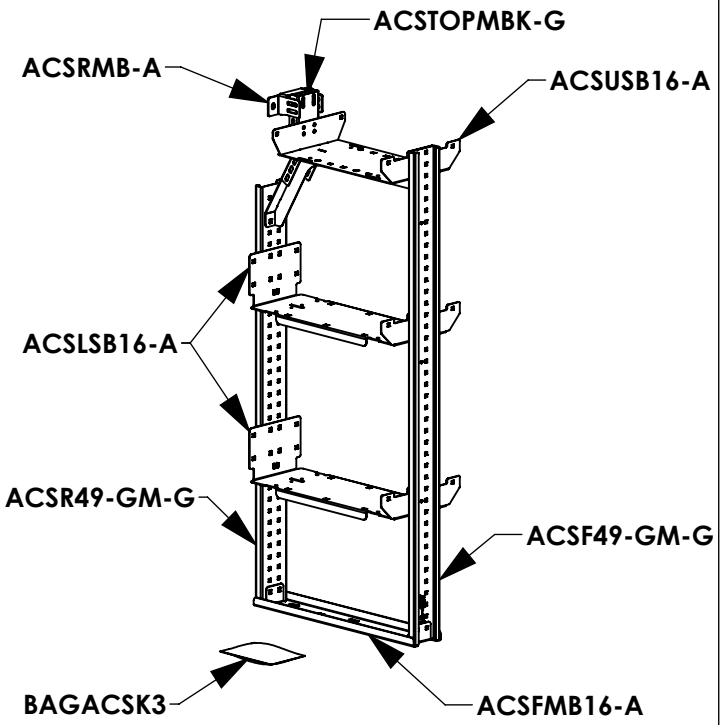


## ACSK1649-GMA3

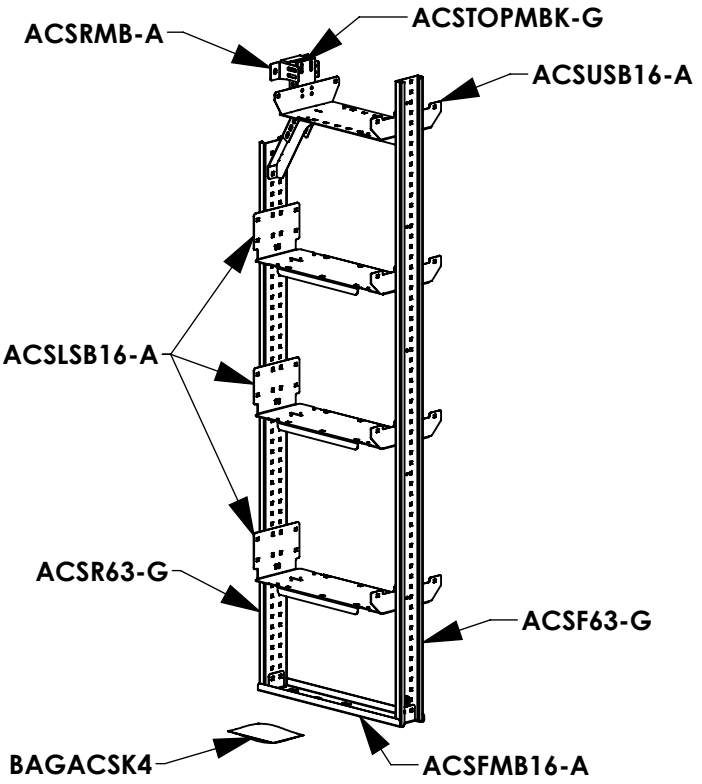


## ACSK1663A4

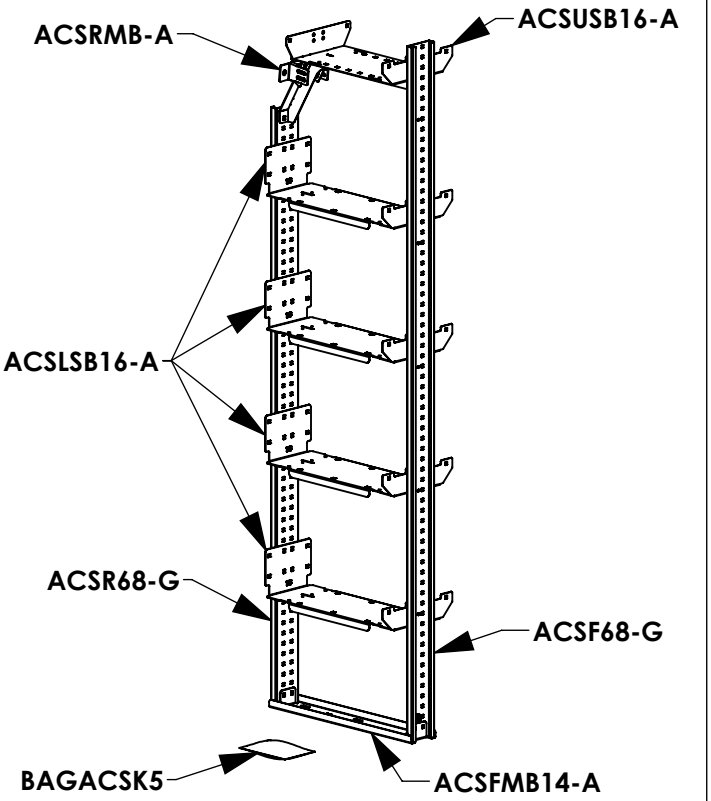


## ACSK1668A5

# 18 IN DEEP CENTER SUPPORT KIT PRODUCT STRUCTURES

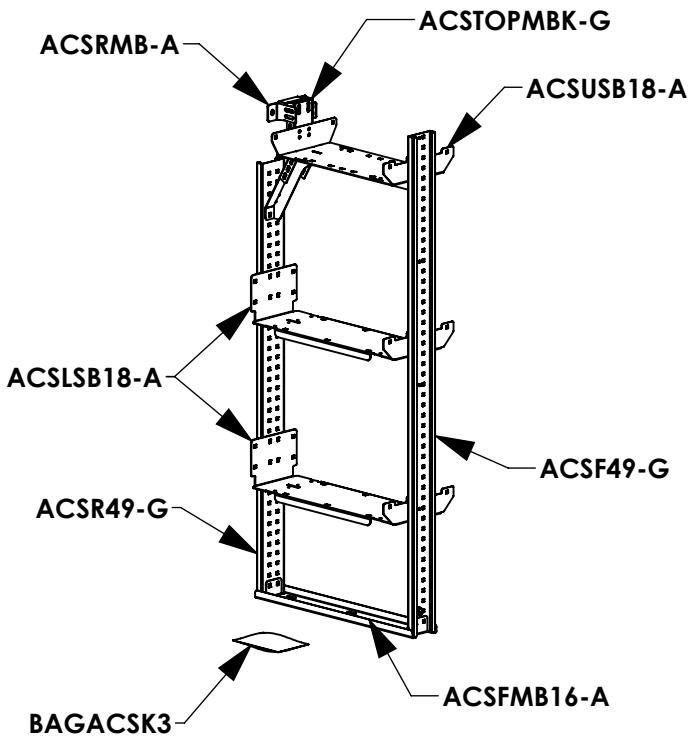


## ACSK1849A3

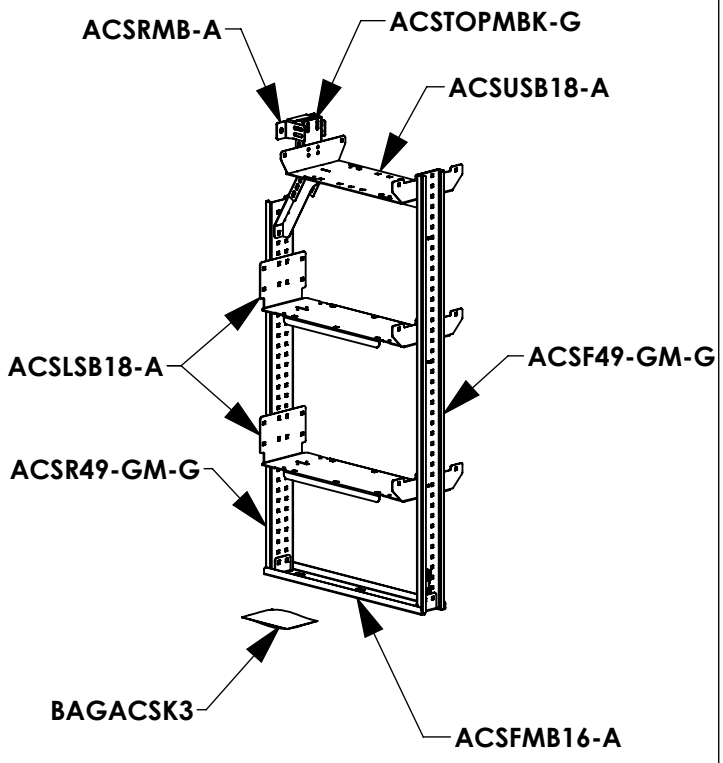


## ACSK1849-GMA3

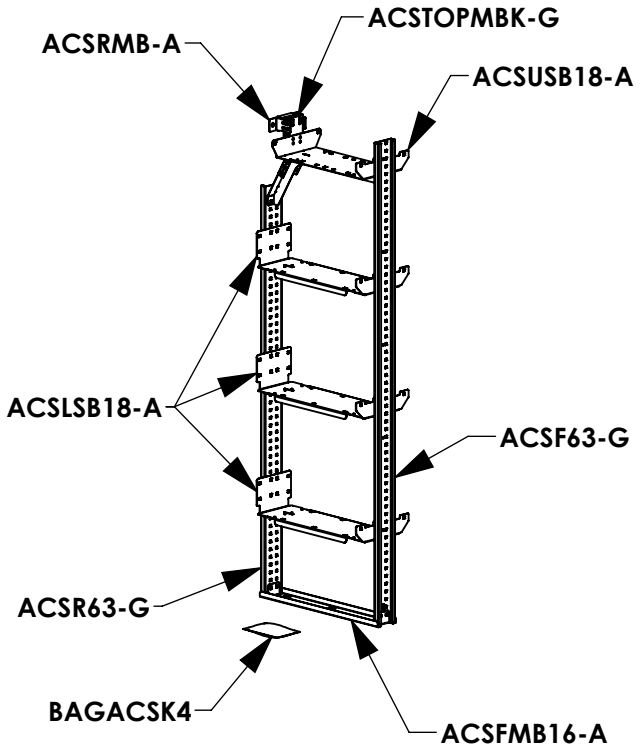


## ACSK1863A4

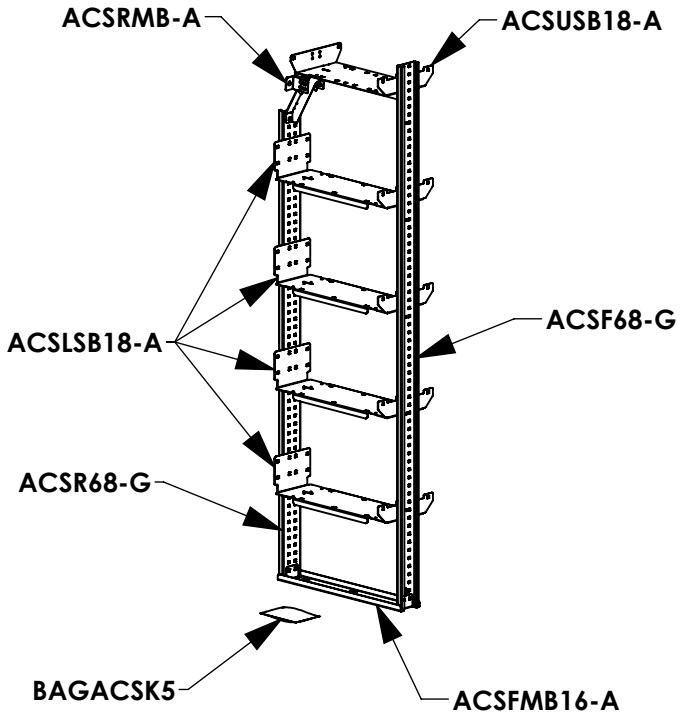


## ACSK1868A5

# SINGLE CENTER SUPPORT KITS AND DIMENSIONS

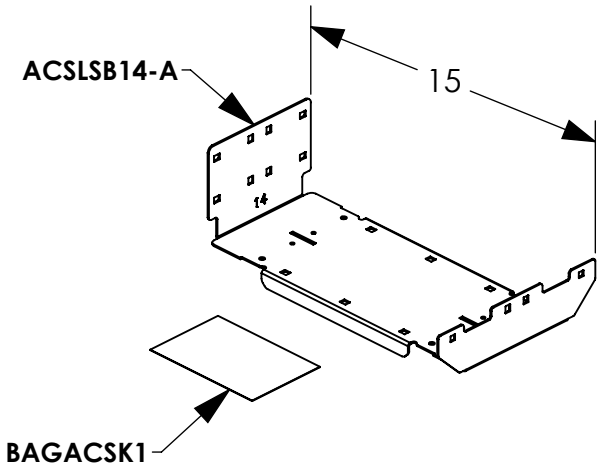


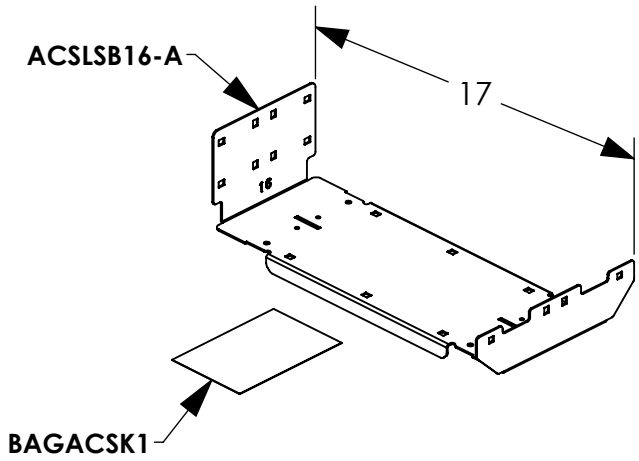


## ACSK14A1

## ACSK16A1

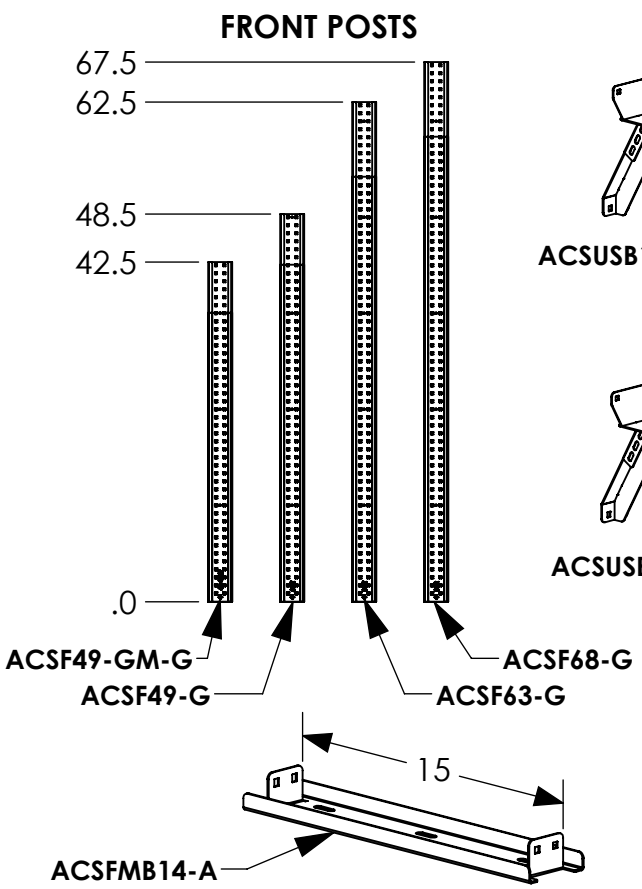


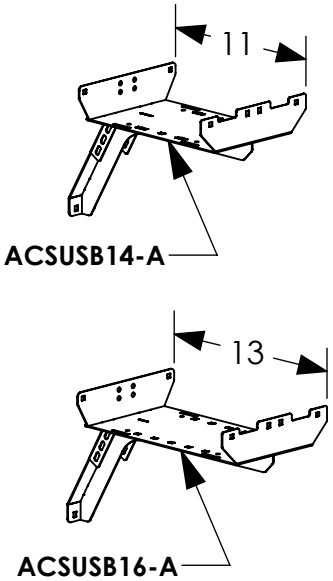


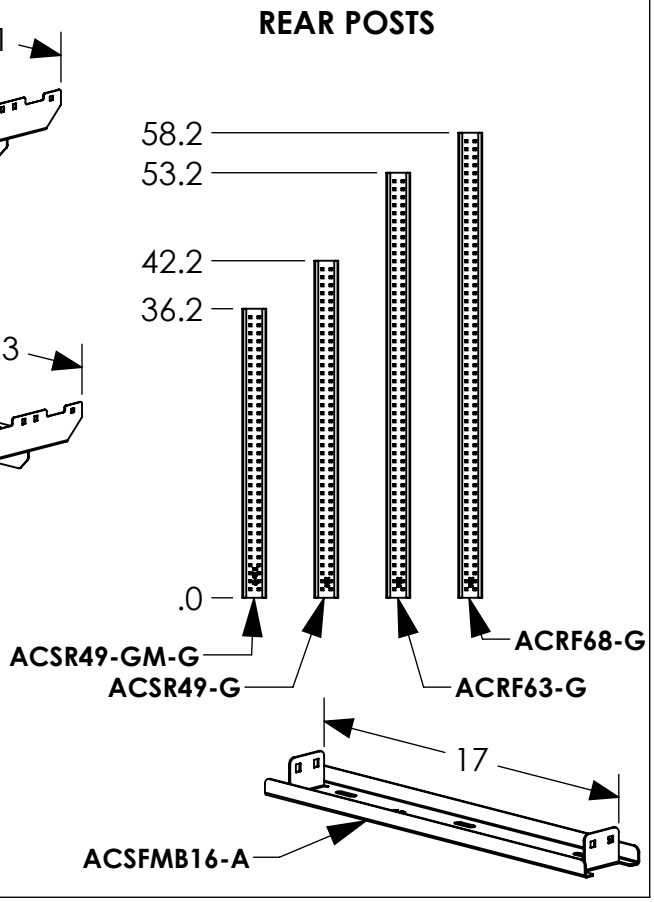

# SINGLE CENTER SUPPORT KITS AND DIMENSIONS

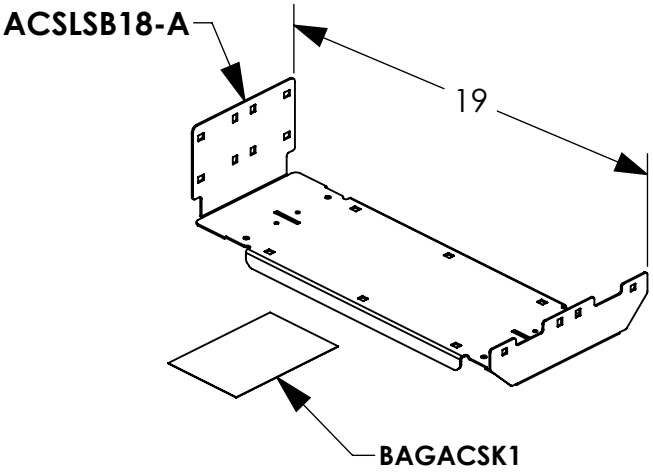


**ACSK18A1**

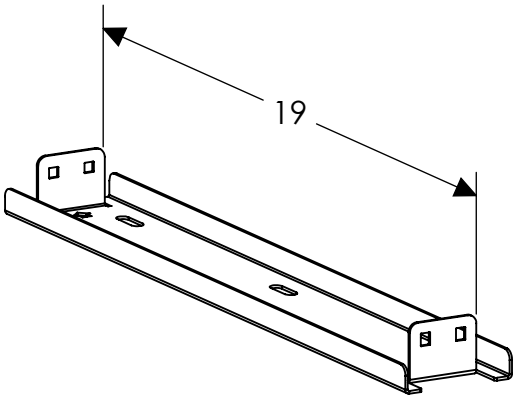


**ACSFMB18-A**

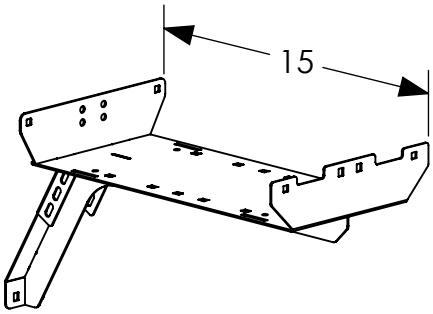


**ACSUSB18-A**

# MOUNTING BRACKET KIT PRODUCT STRUCTURES

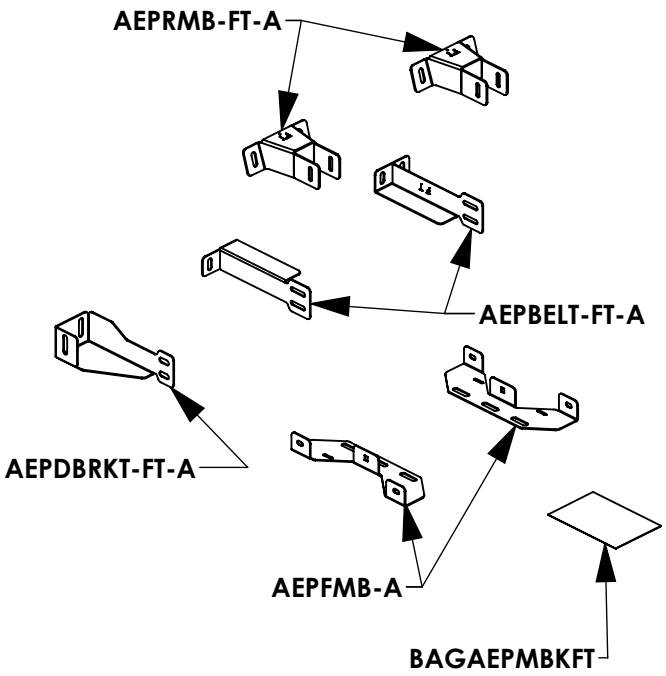


## AEPMBKFTA

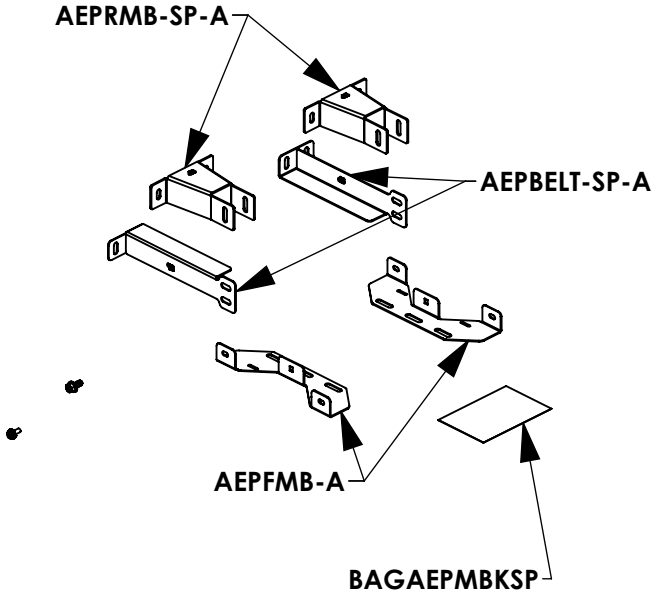


## AEPMBKSPA

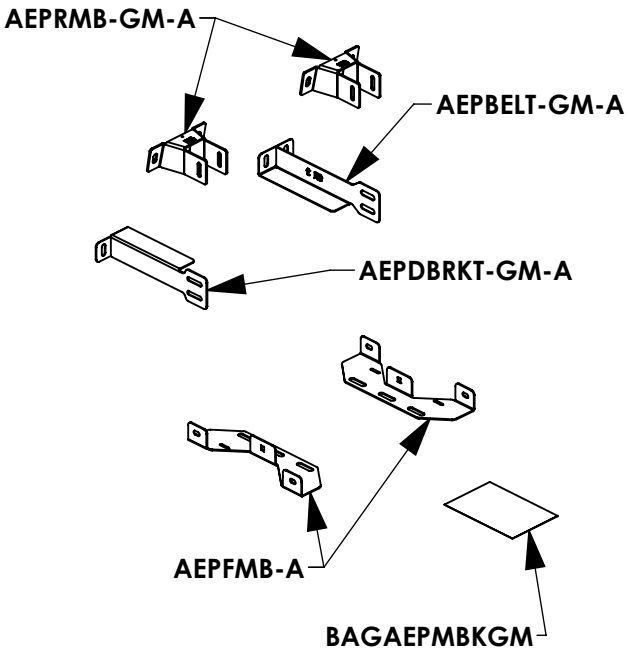


## AEPMBKGMA

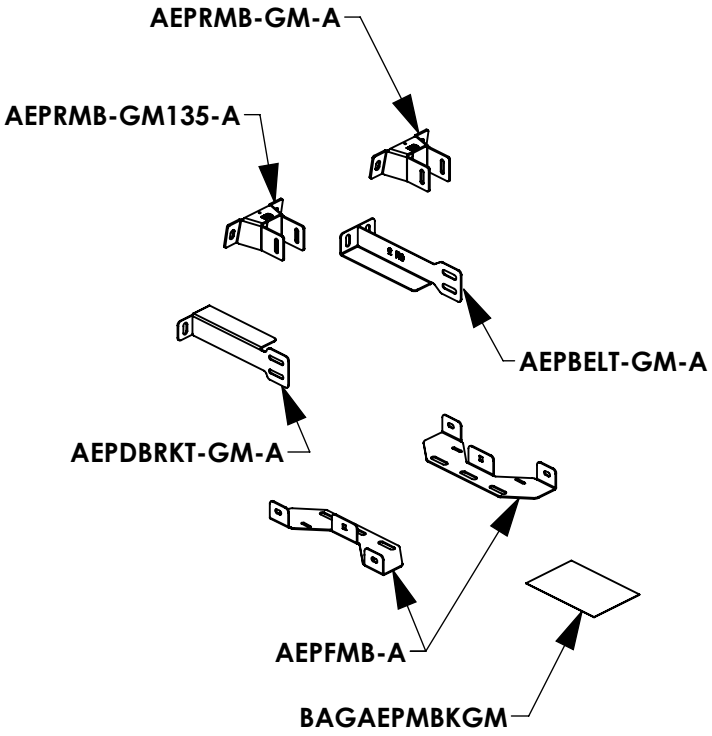


## AEPMBKGM135PSA

# MOUNTING BRACKET KIT PRODUCT STRUCTURES

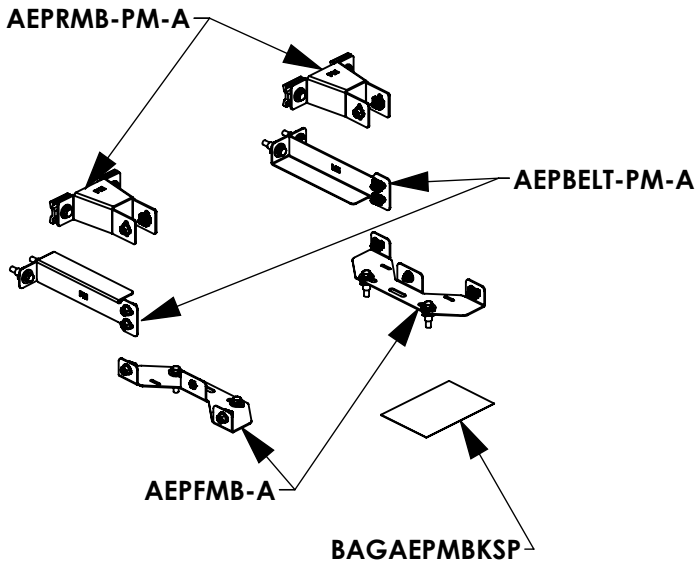


## AEPMBKPMA

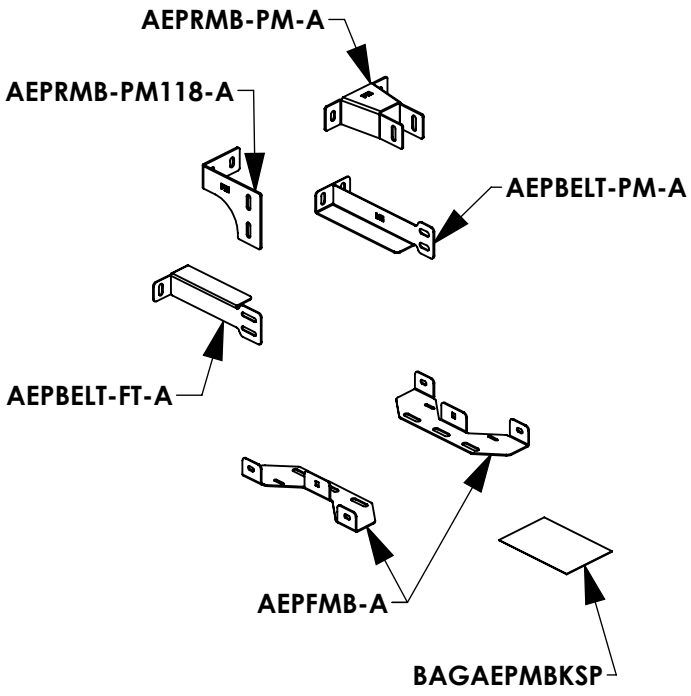


## AEPMBKPM118PSA

THIS INSTRUCTION IS TO DEMONSTRATE THE ASSEMBLY AND INSTALLATION OF THE

# ADRIAN SHELVING PRODUCT LINE

TO FIND KIT PART NUMBERS AND PRODUCT STRUCTURES OF YOUR SPECIFIC SHELVING UNIT, PLEASE REFER TO PART #: APP-ASHELVING

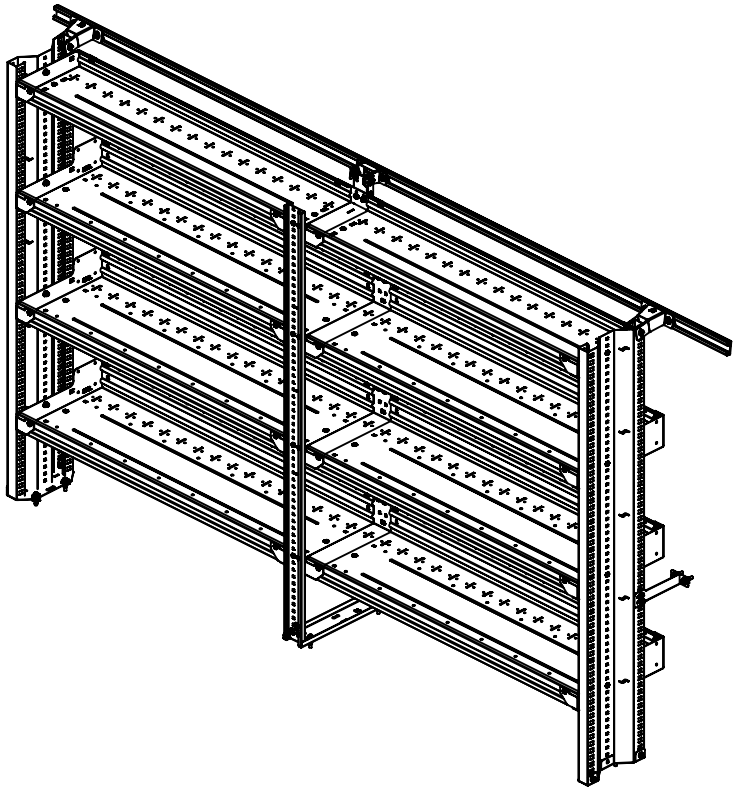

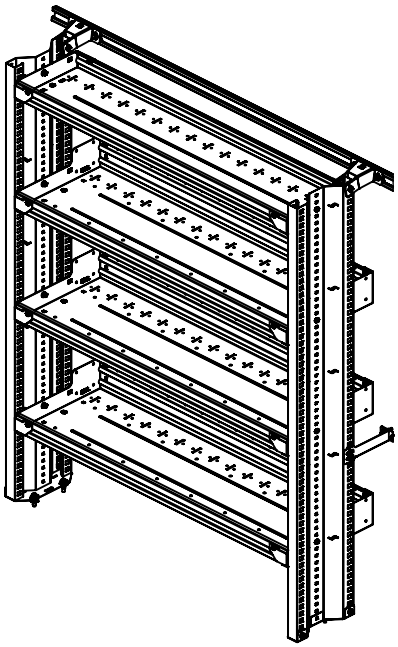

**TOOLS NEEDED:**

- TAPE MEASURE
- RUBBER MALLET
- IMPACT
- DRILL
- 7/16" SOCKET
- 1/2" SOCKET
- 10MM SOCKET
- 7/16" WRENCH
- 1/2" WRENCH
- PLUSNUT GUN
- MARKER
- 1/2" DRILL BIT
- 1 3/16" HOLE SAW

## *BEST PRACTICES*

**GET TO KNOW THE VEHICLE** - AT THE BEGINNING OF ANY INSTALLATION, CHECK THE LOCATION OF THE FUEL TANK, FUEL LINES, BRAKE LINES, HIGH VOLTAGE BATTERIES AND WIRING HARNESSES TO AVOID INJURY OR PROPERTY DAMAGE FROM TOOL CONTACT.

**SEAL ALL EXTERIOR HOLES** - ALL INSTALLATION HOLES SHOULD BE SEALED WITH BUTYL TAPE OR SILICON TO PREVENT WATER AND EXHAUST GASES FROM ENTERING THE VEHICLE.

**CONTROL DRILL DEPTH** - TO AVOID DAMAGE TO THE VEHICLE, USE A DRILL STOP OR CLEARED STEP BIT WHEN DRILLING INSTALLATION HOLES.

**ALWAYS ADD PRIMER** - WHEN ADDING INSTALLATION HOLES BE SURE TO USE A SELF-ETCHING PRIMER TO PREVENT CORROSION, FASTENER FAILURE AND INJURY.

**MOUNTING POINTS MUST HAVE METAL-TO-METAL CONTACT** - USE PROVIDED MOUNTING SPACERS TO ACCOMMODATE FOR VEHICLE FEATURES, CARPET OR SUBFLOORS.

**PROVIDE CLEARANCE FOR SPACERS** - IF THE INSTALLATION VEHICLE CONTAINS A CARPET OR SUBFLOOR, USE A 1-3/16" DIAMETER CARPET CUTTER (P/N: 31183-0) AT ALL MOUNTING LOCATIONS TO OPEN UP ROOM FOR SPACERS.

**CHECK SPACER ORIENTATION** - BE SURE THAT THE INDENT IN THE SPACER COVERS THE PLUSNUT HEAD; THIS ENSURES THE MOST METAL-TO-METAL CONTACT AND REDUCES VIBRATION.

**PLUSNUT INSTALLATION** - A PLUSNUT GUN IS RECOMMENDED FOR PLUSNUT INSTALLATION FOR ITS PRODUCTION SPEED. HOWEVER, A PLUSNUT SETTING TOOL CAN ALSO BE USED (P/N: 22200-0).

**THRU-BOLT CLEARANCE** - WHEN USING A THRU-BOLT AT ANY MOUNTING LOCATION, BE SURE THAT YOUR HOLE HAS 1/16" CLEARANCE.

**BEST PRACTICE: ORGANIZE ALL FASTENERS & VERIFY THAT ALL ARE ACCOUNTED FOR**



## *FASTENERS USED - END CAP KITS*

***BAG REFERENCE:*** **SEE TABLE BELOW**

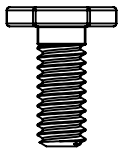

**FAS0924**
**FLAT HEAD CRG BOLT**
**1/4-20 X .63 LG**

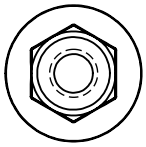

**FAS0055**
**NYLOK FLANGE NUT**
**1/4-20 HEX**

| BAG PART NUMBER | BAG DESCRIPTION | FAS0924 QTY | FAS0055 QTY |
|---|---|---|---|
| **BAGAECK2T1** | BAG FOR END CAP KIT OF 1 | 10 | 10 |
| **BAGAECK2T3** | BAG FOR END CAP KIT OF 3 | 28 | 28 |
| **BAGAECK2T4** | BAG FOR END CAP KIT OF 4 | 38 | 38 |
| **BAGAECK2T5** | BAG FOR END CAP KIT OF 5 | 48 | 48 |

INTENTIONALLY LEFT BLANK

**BEST PRACTICE: ORGANIZE ALL FASTENERS & VERIFY THAT ALL ARE ACCOUNTED FOR**



## *FASTENERS USED - CENTER SUPPORT KITS*

***BAG REFERENCE:*** **SEE TABLE BELOW**

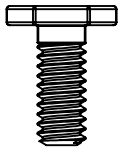

**FAS0924**
**FLAT HEAD CRG BOLT**
**1/4-20 X .63 LG**

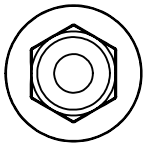

**FAS0055**
**NYLOK FLANGE NUT**
**1/4-20 HEX**

| BAG PART NUMBER | BAG DESCRIPTION | FAS0924 QTY | FAS0055 QTY |
|---|---|---|---|
| **BAGACSK1** | BAG FOR CENTER SUPPORT KIT OF 1 | 14 | 14 |
| **BAGACSK3** | BAG FOR CENTER SUPPORT KIT OF 3 | 42 | 46 |
| **BAGACSK4** | BAG FOR CENTER SUPPORT KIT OF 4 | 56 | 60 |
| **BAGACSK5** | BAG FOR CENTER SUPPORT KIT OF 5 | 70 | 74 |

**NOTE: FASTENERS BELOW ARE NOT INCLUDED IN BAGACSK1**

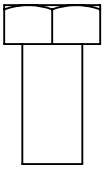

**FAS0165**
**HEX HEAD BOLT**
**5/16-18 X .63 LG**
**QTY: 02**

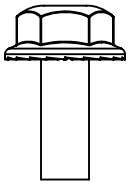

**FAS0018**
**HEX FLANGE BOLT**
**1/4-20 X .63 LG**
**QTY: 04**

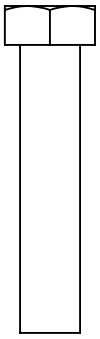

**FAS0092**
**HEX HEAD BOLT**
**5/16-18 X 1.5 LG**
**QTY: 04**

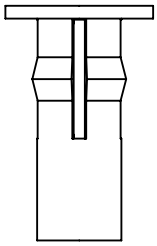

**FAS0091**
**PLUSNUT**
**5/16-18**
**QTY: 04**

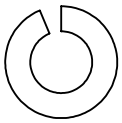

**FAS0098**
**SPLIT LOCK WASHER**
**5/16**
**QTY: 04**

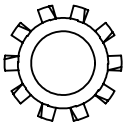

**FAS0085**
**STAR LOCK WASHER**
**5/16**
**QTY: 02**

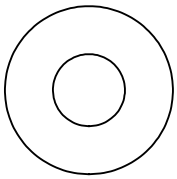

**FAS0086**
**FLAT WASHER**
**5/16**
**QTY: 06**

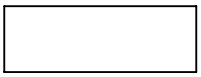

**03927-1**
**FLOOR SPACER**
**11/32**
**QTY: 04**

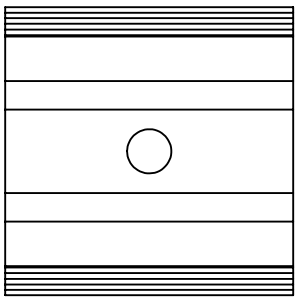

**35335-0**
**AD RAIL SLIDE**
**1.5 LG**
**QTY: 02**

**03927-2**
**FLOOR SPACER**
**11/32**
**QTY: 04**

INTENTIONALLY LEFT BLANK

**BEST PRACTICE: ORGANIZE ALL FASTENERS & VERIFY THAT ALL ARE ACCOUNTED FOR**



# *FASTENERS USED - FORD TRANSIT MOUNTING BRACKETS*

***BAG REFERENCE:*** **BAGAEPMBKFT**

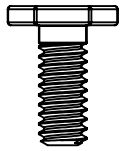

**FAS0924**
**FLAT HEAD CRG BOLT**
**1/4-20 X .63 LG**
**QTY: 02**

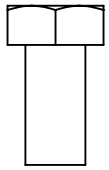

**FAS0165**
**HEX HEAD BOLT**
**5/16-18 X .63 LG**
**QTY: 04**

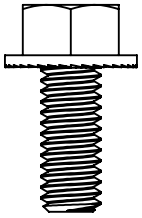

**FAS0438**
**HEX FLANGE BOLT**
**5/16-18 X .75 LG**
**QTY: 02**

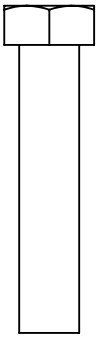

**FAS0092**
**HEX HEAD BOLT**
**5/16-18 X 1.5 LG**
**QTY: 08**

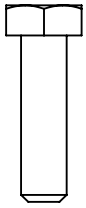

**FAS0187**
**SCREW, HH,**
**M6-1.0 X 22**
**QTY: 01**

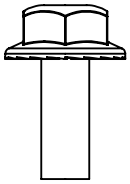

**FAS0018**
**HEX FLANGE BOLT**
**1/4-20 X .63 LG**
**QTY: 12**

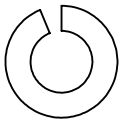

**FAS0098**
**SPLIT LOCK WASHER**
**5/16**
**QTY: 08**

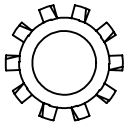

**FAS0085**
**STAR LOCK WASHER**
**5/16**
**QTY: 04**

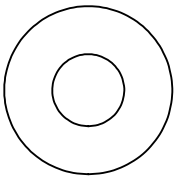

**FAS0086**
**FLAT WASHER**
**5/16**
**QTY: 12**

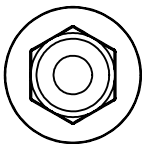

**FAS0055**
**NYLOK FLANGE NUT**
**1/4-20 HEX**
**QTY: 02**

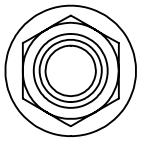

**FAS0440**
**NYLOK FLANGE NUT**
**5/16-18 HEX**
**QTY: 02**

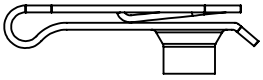

**FAS0994**
**U-NUT**
**1/4-20**
**QTY: 12**

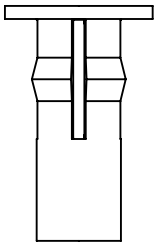

**FAS0091**
**PLUSNUT**
**5/16-18**
**QTY: 08**

**FAS0060**
**WASHER, LCK**
**SPLIT, 1/4, ZP**
**QTY: 01**

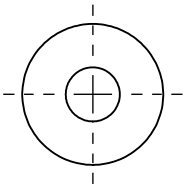

**FAS0067**
**WASHER, FLAT,**
**USS, 1/4, ZP**
**QTY: 1**

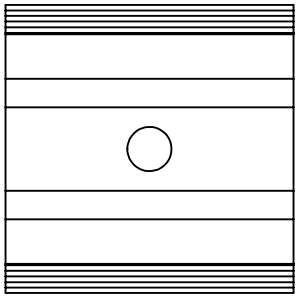

**35335-0**
**AD RAIL SLIDE**
**1.5 LG**
**QTY: 04**

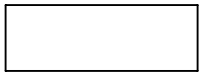

**03927-1**
**FLOOR SPACER**
**11/32**
**QTY: 04**

**03927-2**
**FLOOR SPACER**
**11/32**
**QTY: 04**

INTENTIONALLY LEFT BLANK

**BEST PRACTICE: ORGANIZE ALL FASTENERS & VERIFY THAT ALL ARE ACCOUNTED FOR**



## *FASTENERS USED - GM EXPRESS/GMC SAVANA MOUNTING BRACKETS*

***BAG REFERENCE:*** **BAGAEPMBKGM**

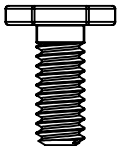

**FAS0924**
**FLAT HEAD CRG BOLT**
**1/4-20 X .63 LG**
**QTY: 02**

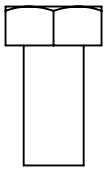

**FAS0165**
**HEX HEAD BOLT**
**5/16-18 X .63 LG**
**QTY: 08**

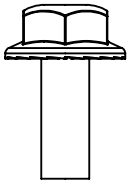

**FAS0018**
**HEX FLANGE BOLT**
**1/4-20 X .63 LG**
**QTY: 12**

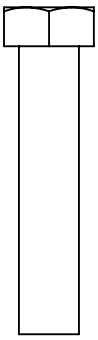

**FAS0092**
**HEX HEAD BOLT**
**5/16-18 X 1.5 LG**
**QTY: 04**

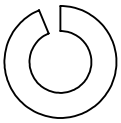

**FAS0098**
**SPLIT LOCK WASHER**
**5/16**
**QTY: 04**

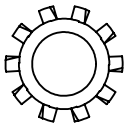

**FAS0085**
**STAR LOCK WASHER**
**5/16**
**QTY: 08**

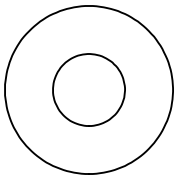

**FAS0086**
**FLAT WASHER**
**5/16**
**QTY: 12**

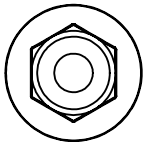

**FAS0055**
**NYLOK FLANGE NUT**
**1/4-20 HEX**
**QTY: 02**

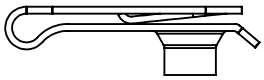

**FAS0994**
**U-NUT**
**1/4-20**
**QTY: 12**

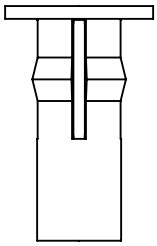

**FAS0091**
**PLUSNUT**
**5/16-18**
**QTY: 04**

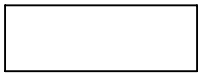

**03927-1**
**FLOOR SPACER**
**11/32**
**QTY: 04**

**03927-2**
**FLOOR SPACER**
**11/32**
**QTY: 04**

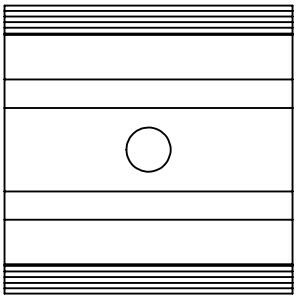

**35335-0**
**AD RAIL SLIDE**
**1.5 LG**
**QTY: 08**

INTENTIONALLY LEFT BLANK

**BEST PRACTICE: ORGANIZE ALL FASTENERS & VERIFY THAT ALL ARE ACCOUNTED FOR**



## *FASTENERS USED - MERCEDES SPRINTER/RAM PROMASTER MOUNTING BRACKETS*

***BAG REFERENCE:*** **BAGAEPMBKSP**

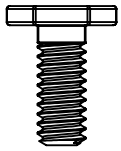

**FAS0924**
**FLAT HEAD CRG BOLT**
**1/4-20 X .63 LG**
**QTY: 02**

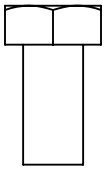

**FAS0165**
**HEX HEAD BOLT**
**5/16-18 X .63 LG**
**QTY: 04**

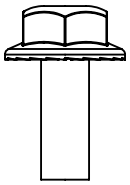

**FAS0018**
**HEX FLANGE BOLT**
**1/4-20 X .63 LG**
**QTY: 12**

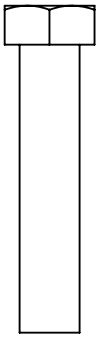

**FAS0092**
**HEX HEAD BOLT**
**5/16-18 X 1.5 LG**
**QTY: 08**

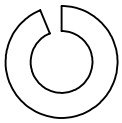

**FAS0098**
**SPLIT LOCK WASHER**
**5/16**
**QTY: 08**

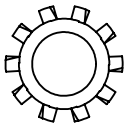

**FAS0085**
**STAR LOCK WASHER**
**5/16**
**QTY: 04**

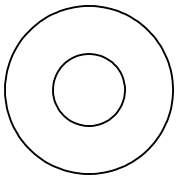

**FAS0086**
**FLAT WASHER**
**5/16**
**QTY: 12**

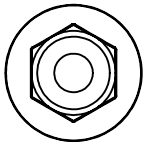

**FAS0055**
**NYLOK FLANGE NUT**
**1/4-20 HEX**
**QTY: 02**

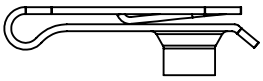

**FAS0994**
**U-NUT**
**1/4-20**
**QTY: 12**

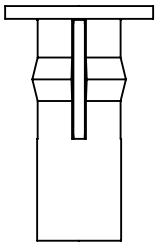

**FAS0091**
**PLUSNUT**
**5/16-18**
**QTY: 08**

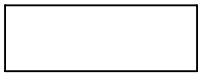

**03927-1**
**FLOOR SPACER**
**11/32**
**QTY: 04**

**03927-2**
**FLOOR SPACER**
**11/32**
**QTY: 04**

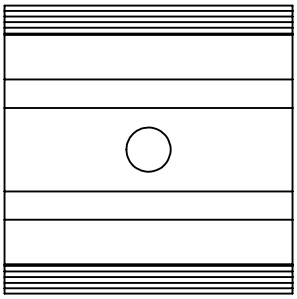

**35335-0**
**AD RAIL SLIDE**
**1.5 LG**
**QTY: 04**

INTENTIONALLY LEFT BLANK

## *DETERMINE DESIRED SHELF HEIGHTS FOR YOUR VEHICLE AND ACCESSORIES*
## *SPACE SHELVES EVENLY UNLESS OTHERWISE SPECIFIED*

- MEASUREMENTS PROVIDED IN TABLES BELOW APPLY TO ALL END PANEL HEIGHTS
- SQUARE HOLE PATTERN IS 1 INCH SPACING FROM HOLE-TO-HOLE
- "S" SYMBOL = 12 HOLES (12 INCHES)

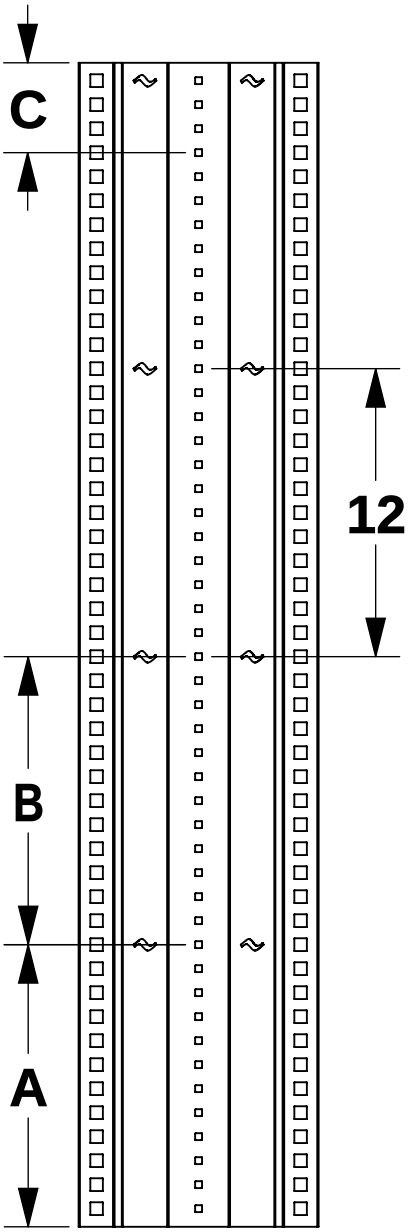


### TABLE 1

| OEM/MODEL | ROOF HEIGHT | A | C |
|---|---|---|---|
| FORD TRANSIT | LOW | 12 | 3 |
| | MEDIUM | 12 | 4 |
| | HIGH | 12 | 3 |
| GM EXPRESS/ GMC SAVANA | STD | 14 | 6 |
| RAM PROMASTER | LOW | 19 | 4 |
| | HIGH | 19 | 2 |
| MERCEDES SPRINTER | STD | 15 | 4 |
| | HIGH | 15 | 3 |

A - DIMENSION REPRESENTS MINIMUM NUMBER OF HOLES FROM BOTTOM OF END PANEL FOR BOTTOM SHELF TO CLEAR VEHICLE'S WHEEL WELL

C - DIMENSION REPERESENTS NUMBER OF HOLES FROM TOP OF END PANEL FOR TOP SHELF LOCATION WHEN INSTALLING CENTER SUPPORT
***NOTE - DIMENSION COULD VARY IF INSTALLING ON OEM OR AFTERMARKET FLOOR MAT

### TABLE 2

| ACCESSORY | B |
|---|---|
| ADRIAN DRAWER UNITS (ALL MODELS) | 14 |
| ADRIAN DOOR KITS (ALL LENGTHS) | 12 |

B - DIMENSION REPRESENTS NUMBER OF HOLES SPACING OF SHELVES FOR MOUNTING ACCESSORY PRODUCTS

# STEP 1 - ASSEMBLE END CAPS TO END PANELS

**Step 1.1**

**LOCATE DESIRED HOLE HEIGHT FOR SHELF**

**INSERT HORIZONTAL TAB IN SQUARE HOLE**

**PUSH VERTICAL TAB INTO OPPOSITE CORRESPONDING SQUARE HOLE**

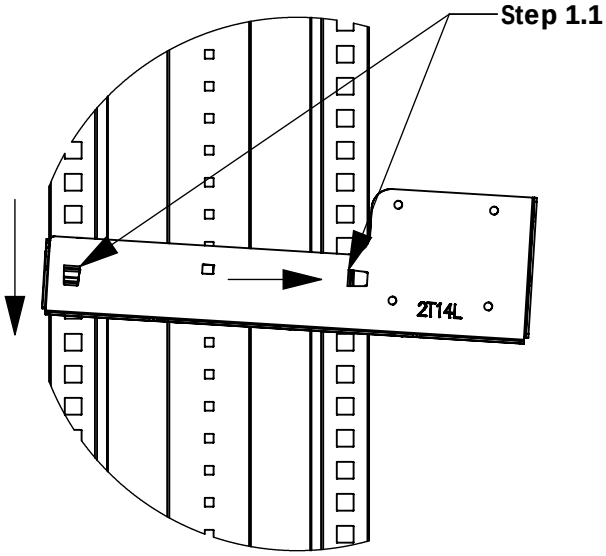


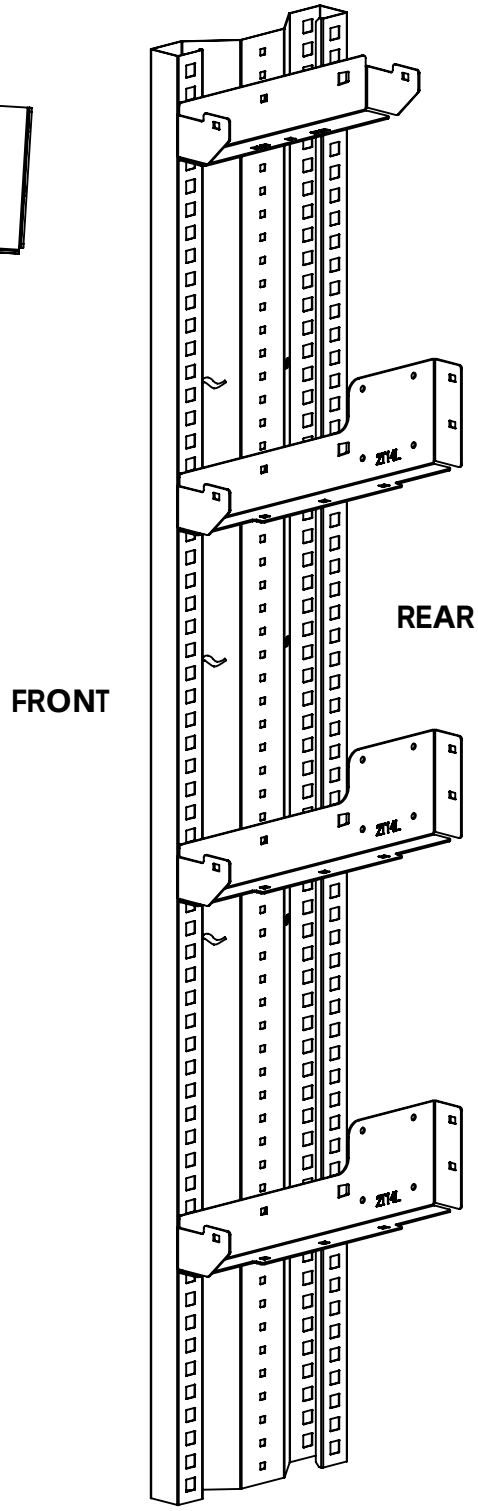


**Step 1.2**

**REPEAT FOR OTHER END PANEL**

# STEP 2 - ASSEMBLE SHELF TO END CAP

**Step 2.1**

**FULLY TIGHTEN**
**FAS0924 AND FAS0055 (02 PLACES PER SHELF) 7/16" SOCKET**

**REPEAT STEP 2.1 FOR REMAINING "2T" SHELVES**

**Step 2.2**

**FULLY TIGHTEN**
**FAS0924 AND FAS0055 (02 PLACES PER SHELF) 7/16" SOCKET**

**REPEAT STEP 2.2 FOR REMAINING "2T" SHELVES**

**Step 2.3**

**FULLY TIGHTEN**
**FAS0924 AND FAS0055 (02 PLACES, TOP SHELF ONLY) 7/16" SOCKET**

**Step 2.4**

**FULLY TIGHTEN**
**FAS0924 AND FAS0055 (02 PLACES, TOP SHELF ONLY) 7/16" SOCKET**

**Step 2.5**

**REPEAT STEPS 2.1 - 2.4 FOR OTHER END PANEL ASSEMBLY**

*****IF INSTALLING CENTER SUPPORT, SKIP THIS STEP AND PROCEED TO STEP 3**

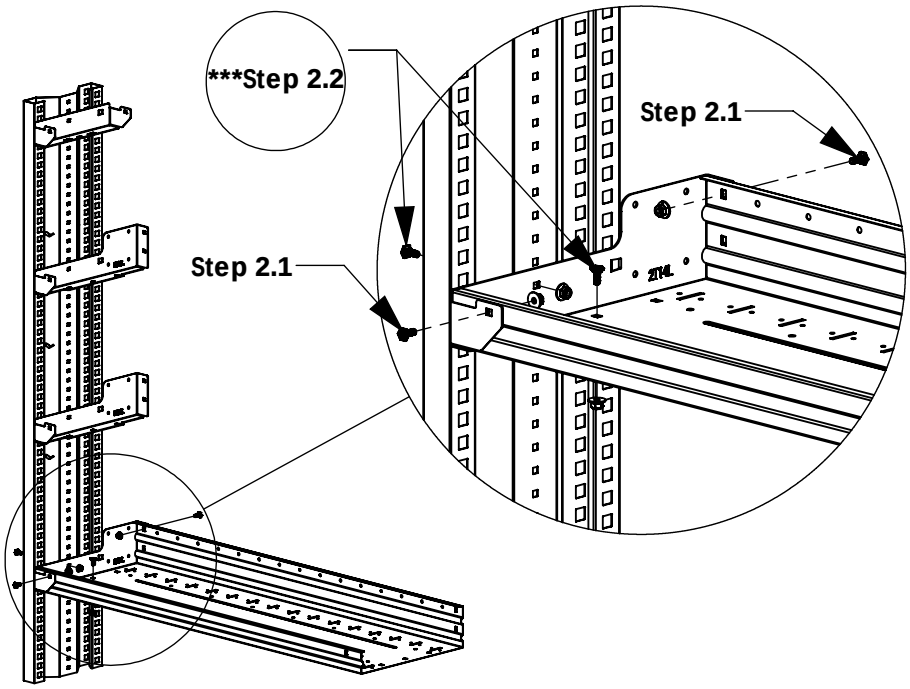


*****NOTE:** **IF INSTALLING A DOOR KIT, DO NOT INSERT FASTENER INTO THE END PANEL, BOTTOM OF THAT SHELF, OR THE SHELF ABOVE IT AT THIS TIME**

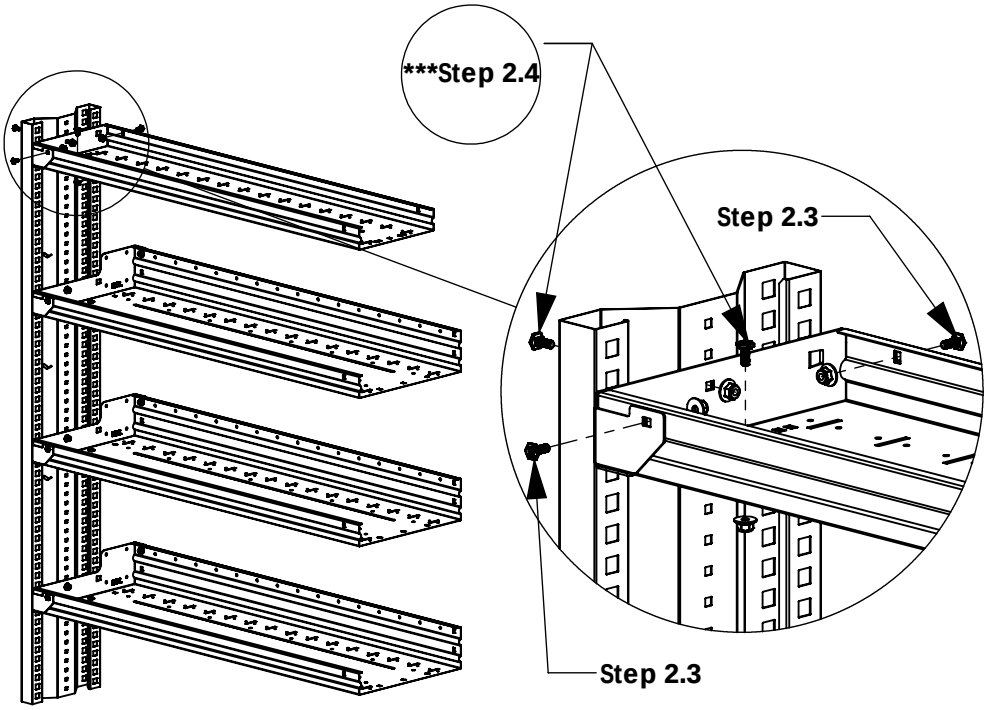

## *STEP 3 - ASSEMBLE CENTER SUPPORT*

## *SKIP TO STEP 5 IF NOT INSTALLING SHELVING UNIT WITH CENTER SUPPORT*

**Step 3.1**

**LOOSELY ASSEMBLE UNTIL AFTER STEP 9.4**
**FAS0924 AND FAS0055 (04 PLACES)**
**7/16" SOCKET**

**ALIGN ARROW OF FRONT POST WITH ARROW ON FLOOR MOUNTING BRACKET**

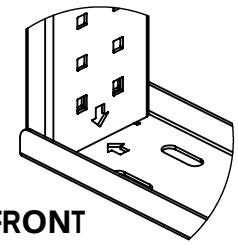


**Step 3.2**

**FULLY TIGHTEN**
**FAS0924 AND FAS0055 (04 PLACES)**
**7/16" SOCKET**

***** FRONT POST LOCATION IS EQUIVALENT TO TOP END CAP LOCATION**

**◇ = 12 HOLES (12 IN)**

***** BACK POST LOCATION IS 9 HOLES LOWER THAN FRONT POST**

**Step 3.3**

**FULLY TIGHTEN**
**FAS0924 AND FAS0055 (04 PLACES PER SUPPORT BRACKET)**
**7/16" SOCKET**

***** FRONT AND REAR POST LOCATIONS ARE EQUIVALENT TO END CAP LOCATIONS**

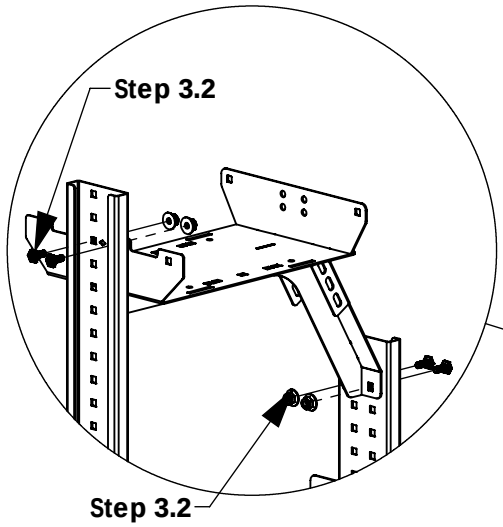


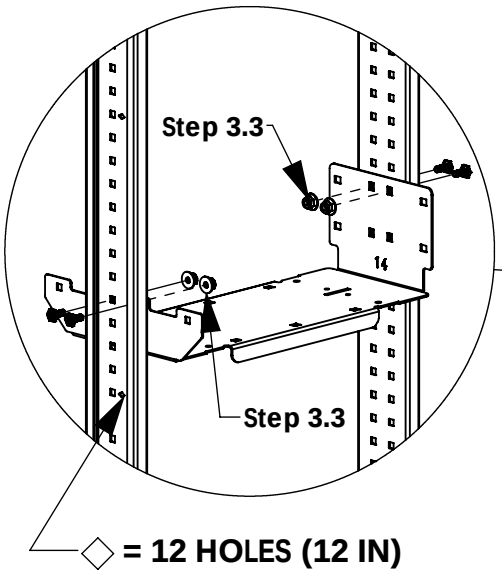


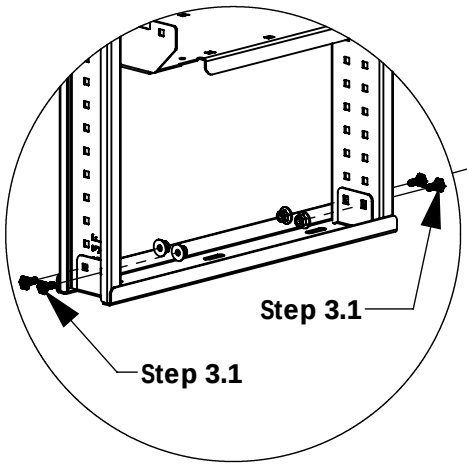


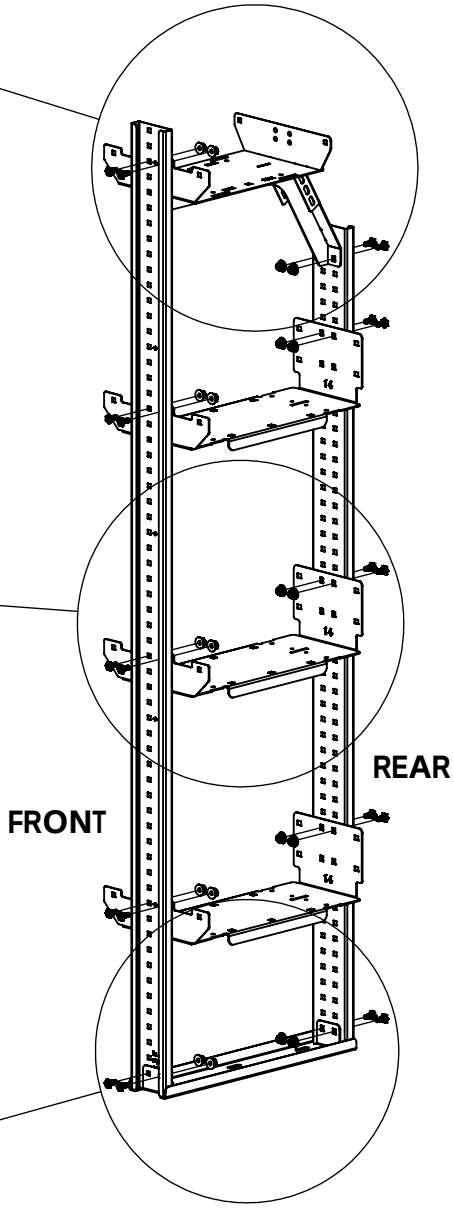

# STEP 4 - ASSEMBLE SHELVES TO CENTER SUPPORT BRACKETS

**Step 4.1**

**FULLY TIGHTEN**
**FAS0924 AND FAS0055 (03 PLACES) 7/16" SOCKET**

**Step 4.2**

**FULLY TIGHTEN**
**FAS0924 AND FAS0055 (03 PLACES PER LOWER SUPPORT BRACKET) 7/16" SOCKET**

**Step 4.3**

**REPEAT STEPS 2.1, 2.2, 4.1, & 4.2 TO ATTACH OTHER SET OF SHELVES TO THE CENTER SUPPORT AND OPPOSITE END PANEL**

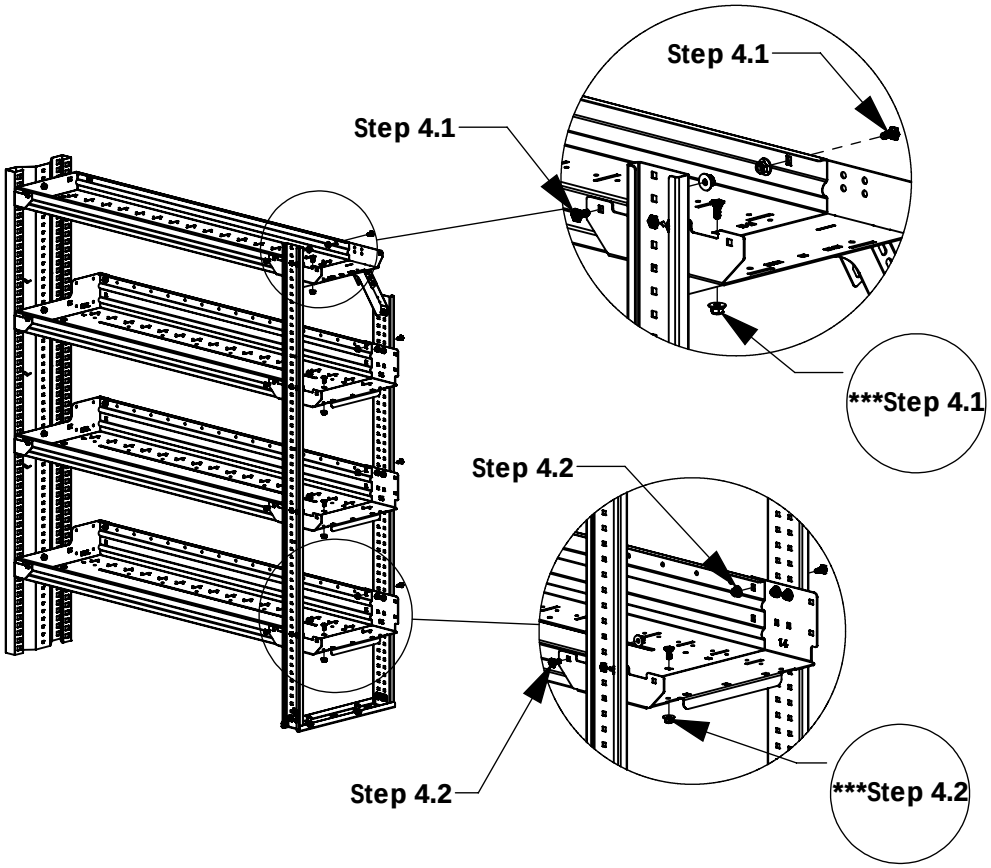


***NOTE: **IF INSTALLING A DOOR KIT, DO NOT INSERT FASTENER INTO THE BOTTOM OF THAT SHELF, OR THE SHELF ABOVE IT AT THIS TIME**

***IF INSTALLING A DOOR KIT, PLEASE COMPLETE STEPS 1-4 IN INSTRUCTION INS-ASK AT THIS TIME BEFORE COMPLETING THE REST OF THIS INSTRUCTION***

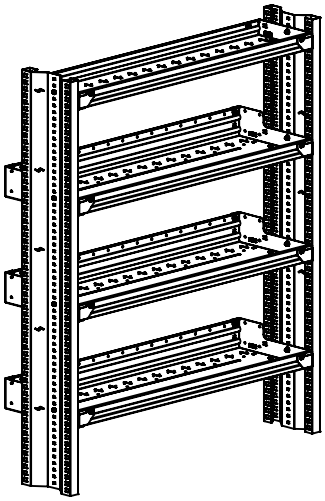

***ASSEMBLY IS COMPLETE, PROCEED TO BEGINNING OF INSTALLATION STEPS***

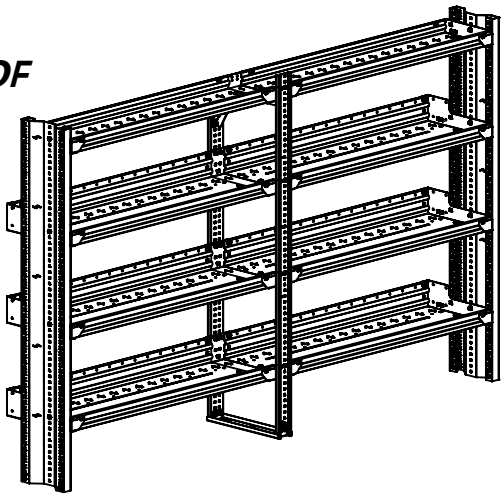

# STEP 5 - ATTACH RAIL MOUNTING BRACKET TO VEHICLE UPPER RAIL KIT

**Step 5.1**

**INSERT RAIL SLIDES INTO UPPER RAIL (IF YOU HAVE NOT DONE SO ALREADY)**

**QTY 2 PER RAIL MOUNTING BRACKET (END PANEL & CENTER SUPPORT)**

**Step 5.2**

**LOOSELY ASSEMBLE UNTIL AFTER STEP 10**
**FAS0165, FAS0085, FAS0086, 35335-0 (04 PLACES)**
**1/2" SOCKET**

**Step 5.3**

**LOOSELY ASSEMBLE UNTIL AFTER STEP 10**
**FAS0018 AND FAS0994 (04 PLACES)**
**7/16" SOCKET**

**FAS0994 SHOULD BE INSERTED INTO THE HOLE THAT BEST FITS YOUR VEHICLE AND YOUR SELECTED FLOOR OPTION**

**RAIL MOUNTING BRACKETS ARE VEHICLE SPECIFIC AND ARE LABELED ACCORDINGLY. FORD TRANSIT BRACKETS ARE SHOWN FOR THE PURPOSES OF THIS INSTRUCTION**

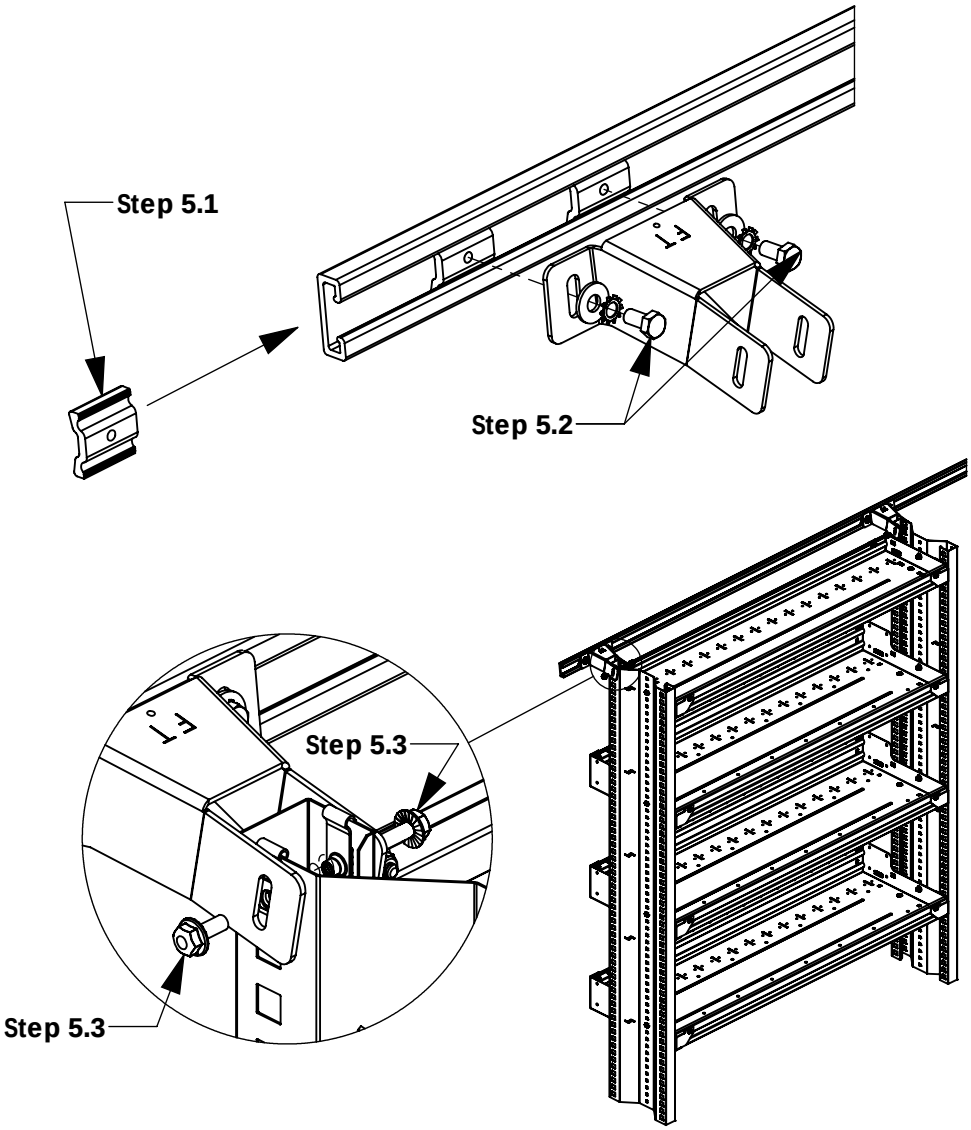


**IF INSTALLING A SHELVING UNIT ON THE PASSENGER SIDE OF ONE OF THE FOLLOWING VEHILCES:**

**- RAM PROMASTER LOW ROOF 118" WHEELBASE**

**THE FRONT MOUNTING BRACKET WILL MOUNT AS SHOWN**

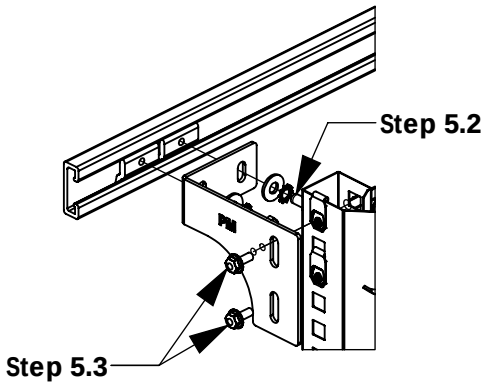

# STEP 6 - ATTACH CENTER SUPPORT MOUNTING BRACKET TO RAIL

## SKIP TO STEP 7 IF NOT INSTALLING CENTER SUPPORT

**Step 6.1**

**LOOSELY ASSEMBLE UNTIL AFTER STEP 10**
**FAS0165, FAS0085, FAS0086, 35335-0 (02 PLACES)**
**1/2" SOCKET**

**Step 6.2A**

**LOOSELY ASSEMBLE UNTIL AFTER STEP 10**
**FAS0018 AND FAS0055 (02 PLACES)**
**7/16" WRENCH**
**7/16" SOCKET**

**Step 6.3A**

**LOOSELY ASSEMBLE UNTIL AFTER STEP 10**
**FAS0018 AND FAS0055 (02 PLACES)**
**7/16" WRENCH**
**7/16" SOCKET**

**Step 6.2B**

**LOOSELY ASSEMBLE UNTIL AFTER STEP 10**
**FAS0018 AND FAS0055 (02 PLACES)**
**7/16" WRENCH**
**7/16" SOCKET**

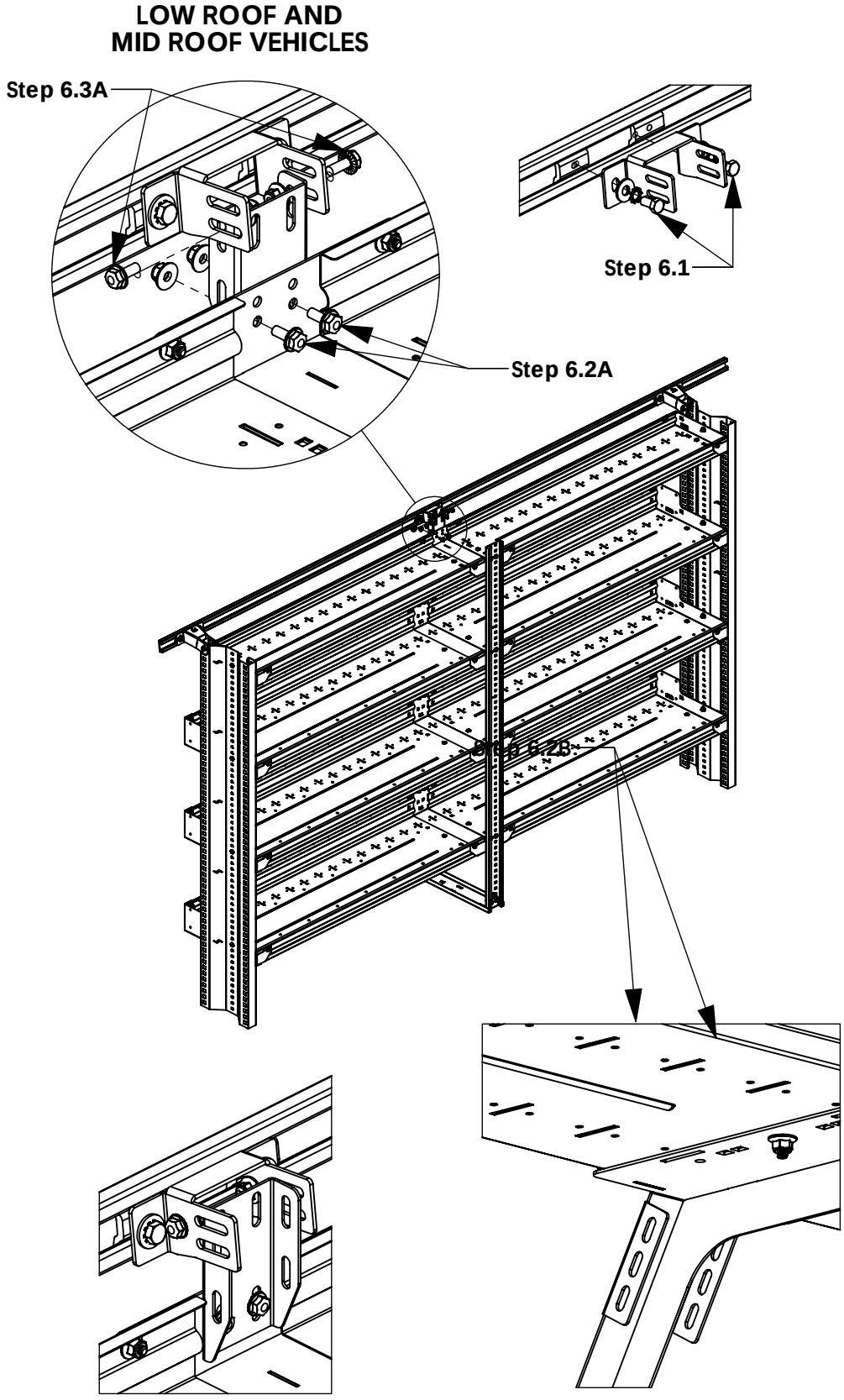

# STEP 7A - ATTACH BELTLINE BRACKETS TO SHELVING UNIT AND INSTALL IN VEHICLE - FORD TRANSIT VANS

**Step 7A.1**

**FULLY TIGHTEN**
**FAS0994 AND FAS0018**
**(04 PLACES)**
**7/16" SOCKET**

**Step 7A.2.1**

**MARK AND DRILL 1/2" HOLES IN BELTLINE OF VEHICLE**

**SET PLUSNUTS IN DRILLED HOLES**

**LOOSELY ASSEMBLE UNTIL AFTER STEP 10**
**FAS0092, FAS0098, FAS0086, FAS0091**
**(02 PLACES)**
**1/2" DRILL BIT**
**PLUSNUT GUN**
**1/2" SOCKET**

**Step 7A.2.2**

**PLACE BRACKET AGAINST DRIVER SIDE D-PILLAR**

**LOOSELY ASSEMBLE UNTIL AFTER STEP 10**
**FAS0187, FAS0060, FAS0067**
**(02 PLACES)**

**10MM SOCKET**

**Step 7A.2.3**

**LOOSELY ASSEMBLE UNTIL AFTER STEP 10**
**FAS0018 AND FAS0440**
**(02 PLACES)**
**1/2" WRENCH**
**1/2" SOCKET**
**7/16" SOCKET**

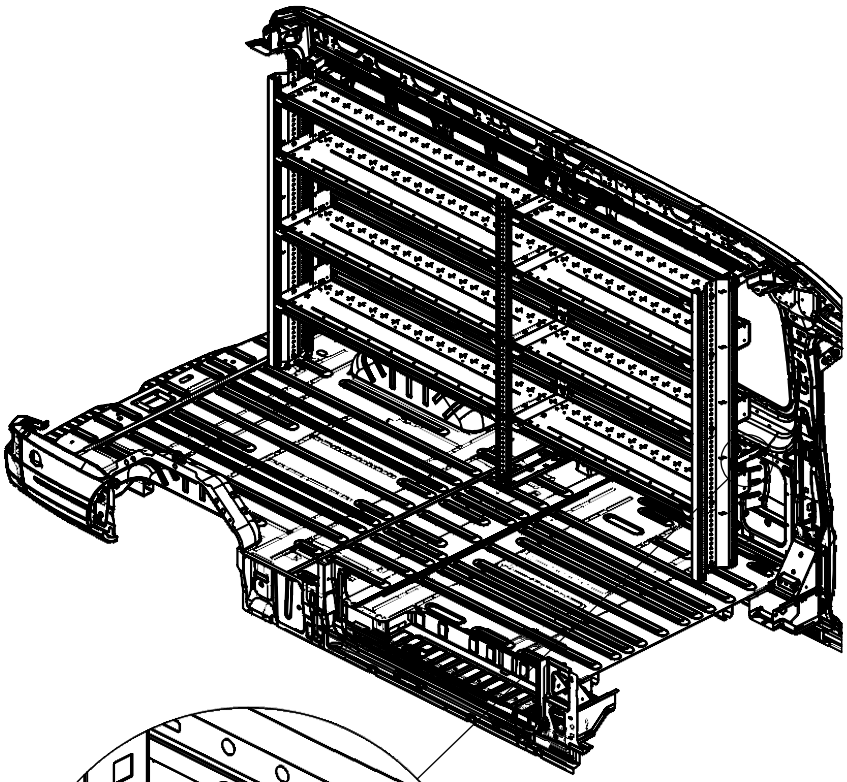

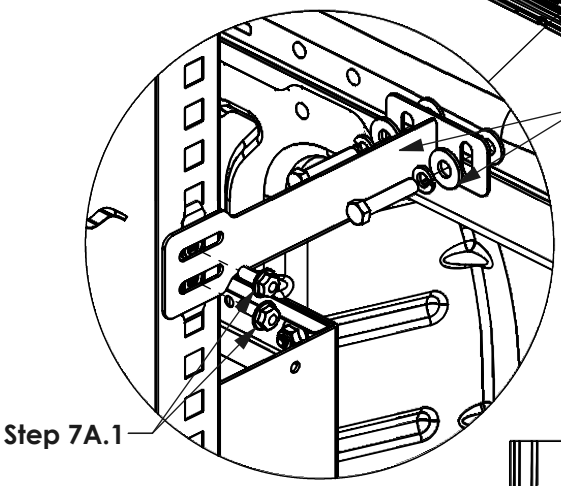


**DRIVER SIDE FRONT / PASSENGER SIDE MOUNTING**

**DRIVER SIDE REAR D-PILLAR MOUNTING**

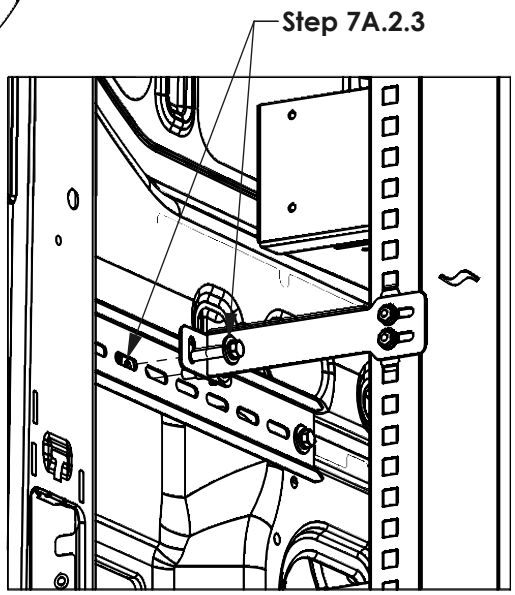


**DRIVER SIDE REAR SPAN BRACKET MOUNTING**

# STEP 7B - ATTACH BELTLINE BRACKETS TO SHELVING UNIT AND INSTALL IN VEHICLE - GM EXPRESS/GMC SAVANA VANS

**Step 7B.1**

**FULLY TIGHTEN**
**FAS0994 AND FAS0018 (04 PLACES)**
**7/16" SOCKET**

**FRONT BRACKET ON DRIVER SIDE AND REAR BRACKET ON PASSENGER SIDE IS LABELED AS "GM 3"**

**REAR BRACKET ON DRIVER SIDE AND FRONT BRACKET ON PASSENGER SIDE IS LABELED AS "GM 1"**

**Step 7B.2**

**LOOSELY ASSEMBLE UNTIL AFTER STEP 10**
**FAS0165, FAS0085, FAS0086, 35335-0 (04 PLACES)**
**1/2" SOCKET**

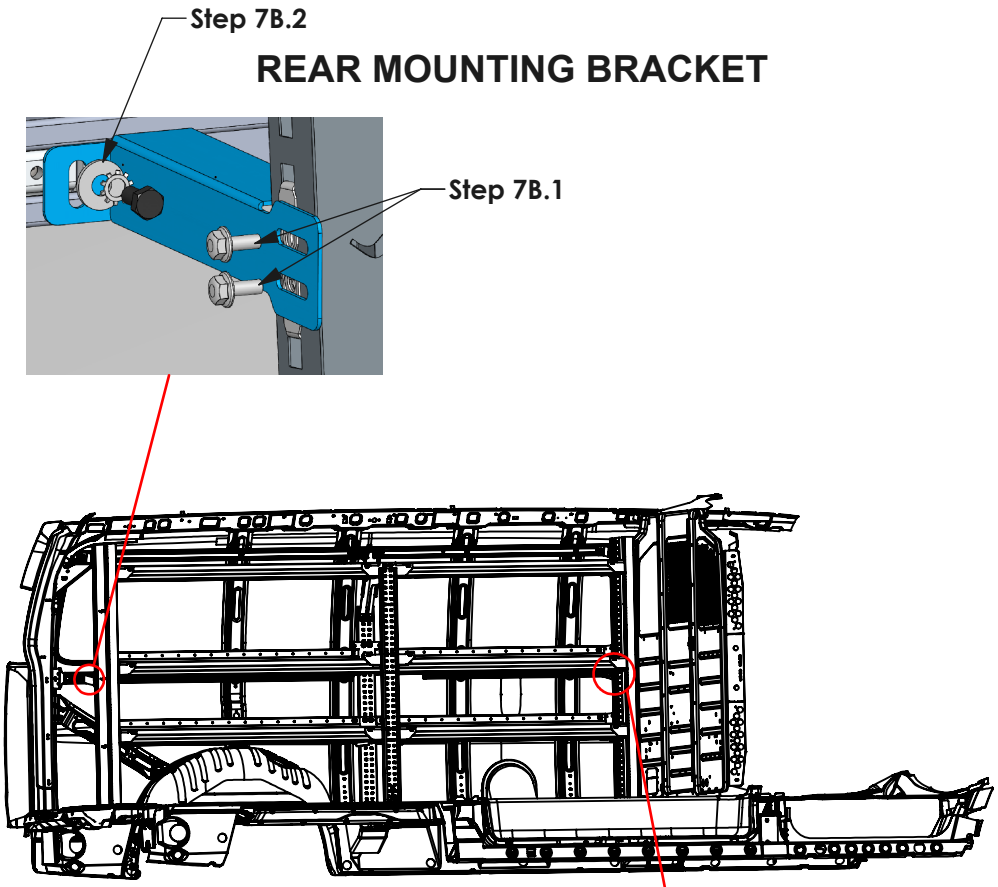


**ENSURE BELTLINE RAIL IS IN CORRECT LOCATION ON WALL TO ATTACH**

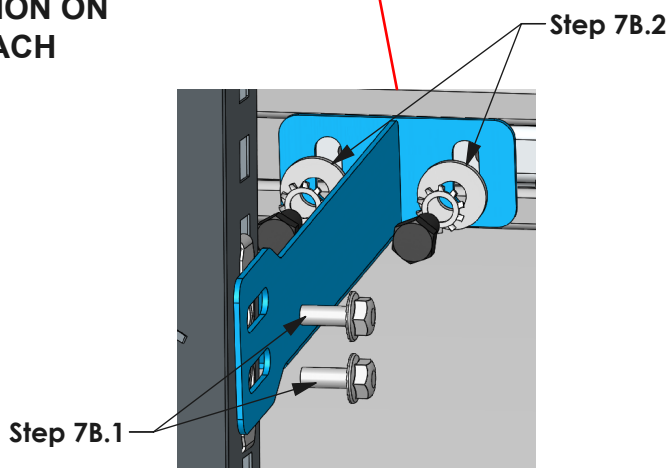


**NOTE: PARTITION REMOVED FOR CLARITY**

**FRONT MOUNTING BRACKET**

# STEP 7C - ATTACH BELTLINE BRACKETS TO SHELVING UNIT AND INSTALL IN VEHICLE - RAM PROMASTER VANS

**Step 7C.1**

**FULLY TIGHTEN**
**FAS0994 AND FAS0018**
**(04 PLACES)**
**7/16" SOCKET**

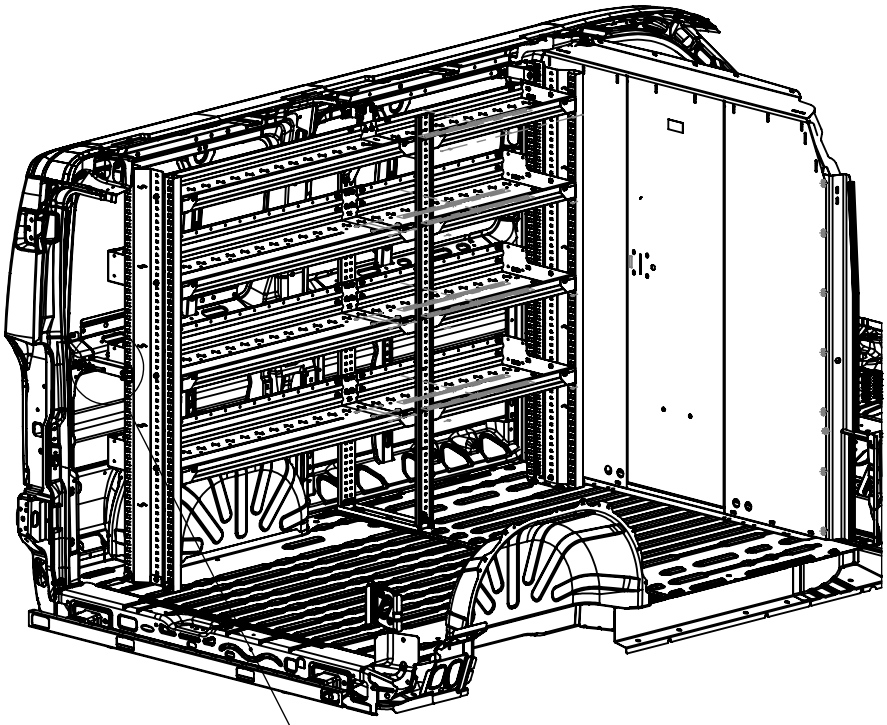

**Step 7C.2**

**MARK AND DRILL 1/2" HOLES IN BELTLINE OF VEHICLE**

**SET PLUSNUTS IN DRILLED HOLES**

**LOOSELY ASSEMBLE UNTIL AFTER STEP 10**
**FAS0092, FAS0098, FAS0086, FAS0091**
**(04 PLACES)**
**1/2" DRILL BIT**
**PLUSNUT GUN**
**1/2" SOCKET**

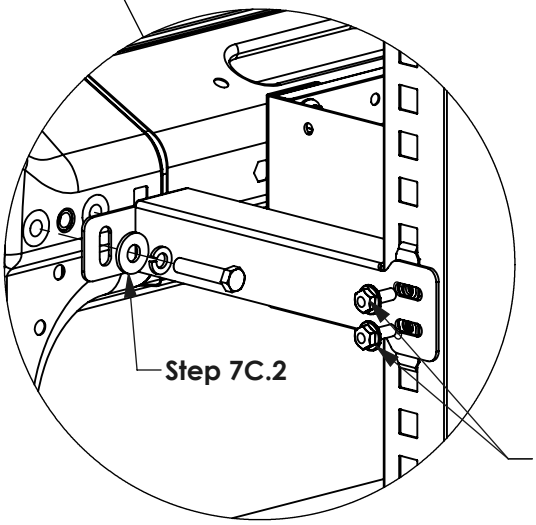


**PROMASTER LOW ROOF**
**118" WHEELBASE**
**PASSENGER SIDE ONLY!**

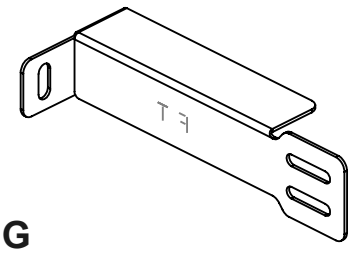

**USE FORD TRANSIT BRACKET**
**FOR FRONT BELTLINE MOUNTING**

# STEP 7D - ATTACH BELTLINE BRACKETS TO SHELVING UNIT AND INSTALL IN VEHICLE - MERCEDES SPRINTER VANS

**Step 7D.1**

**FULLY TIGHTEN**
**FAS0994 AND FAS0018**
**(04 PLACES)**
**7/16" SOCKET**

**Step 7D.2**

**MARK AND DRILL 1/2" HOLES IN BELTLINE OF VEHICLE**

**SET PLUSNUTS IN DRILLED HOLES**

**LOOSELY ASSEMBLE UNTIL AFTER STEP 10**
**FAS0092, FAS0098, FAS0086, FAS0091**
**(04 PLACES)**
**1/2" DRILL BIT**
**PLUSNUT GUN**
**1/2" SOCKET**

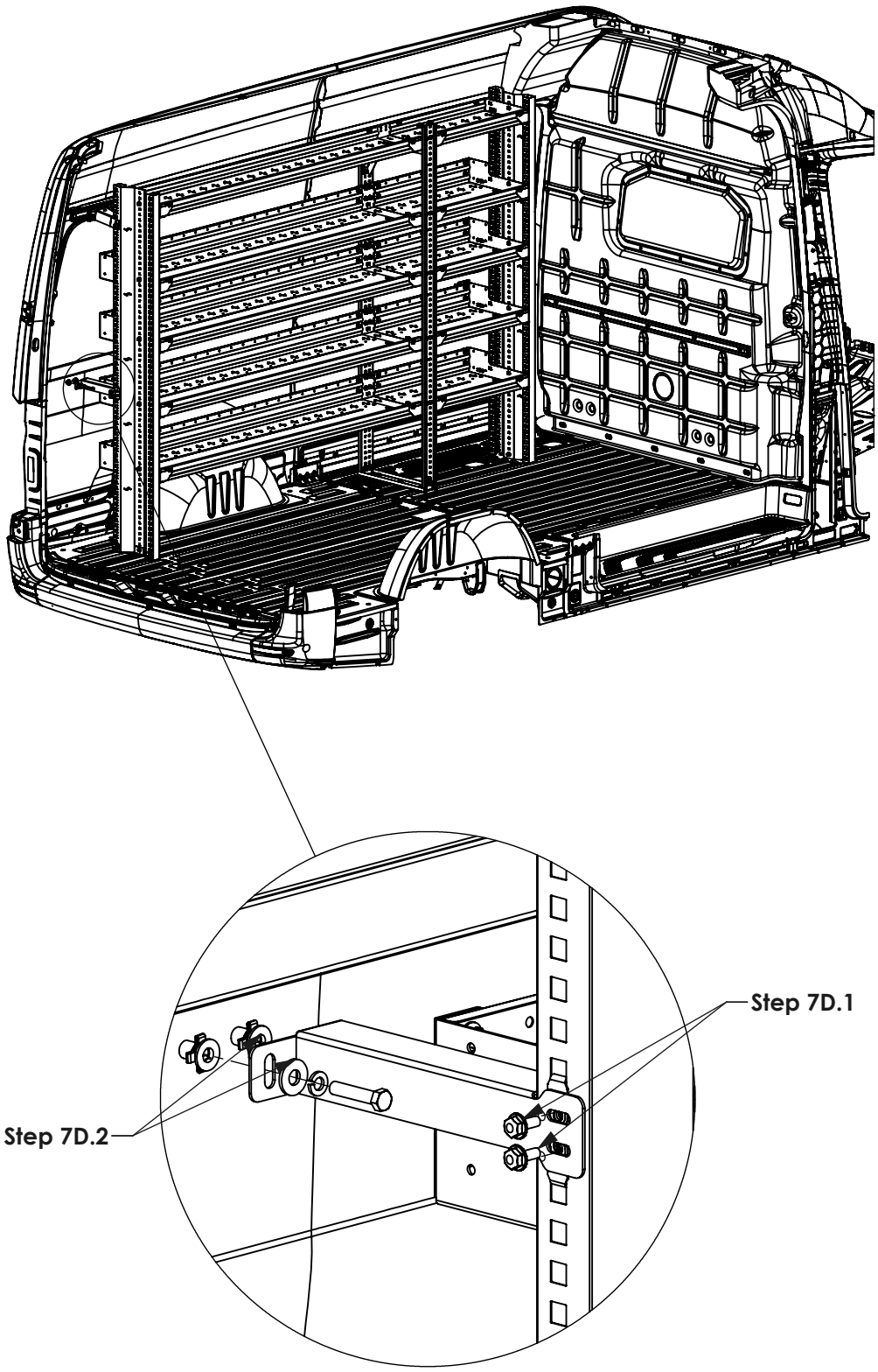


**ALL LOCATIONS**

# STEP 8 - MARK AND DRILL HOLES FOR FLOOR MOUNTING BRACKETS (GAS VEHICLES ONLY)

**Step 8.1**

PLACE BRACKET AGAINST INSIDE FACE OF END PANEL

USING SMALL SLOT, MARK HOLES IN FLOOR FOR END PANEL FLOOR MOUNTING BRACKET

DRILL HOLE IN VEHICLE FLOOR. IF INSTALLING ON OEM OR AFTERMARKET FLOOR, USE HOLE SAW FOR FLOOR SPACER

(04 PLACES)
1/2" DRILL BIT
1 3/16" HOLE SAW

**Step 8.2**

MARK HOLES ON FLOOR
(04 PLACES)

**Step 8.3**

REMOVE BOLTS, SLIGHTLY LIFT SHELVING UNIT, SLIDE CENTER SUPPORT FLOOR BRACKET OUT

(04 PLACES)
7/16" SOCKET

**Step 8.4**

DRILL HOLES IN VEHICLE FLOOR FROM STEP 8.2. IF INSTALLING ON OEM OR AFTERMARKET FLOOR, USE HOLE SAW FOR FLOOR SPACER

(04 PLACES)
1/2" DRILL BIT
1 3/16" HOLE SAW

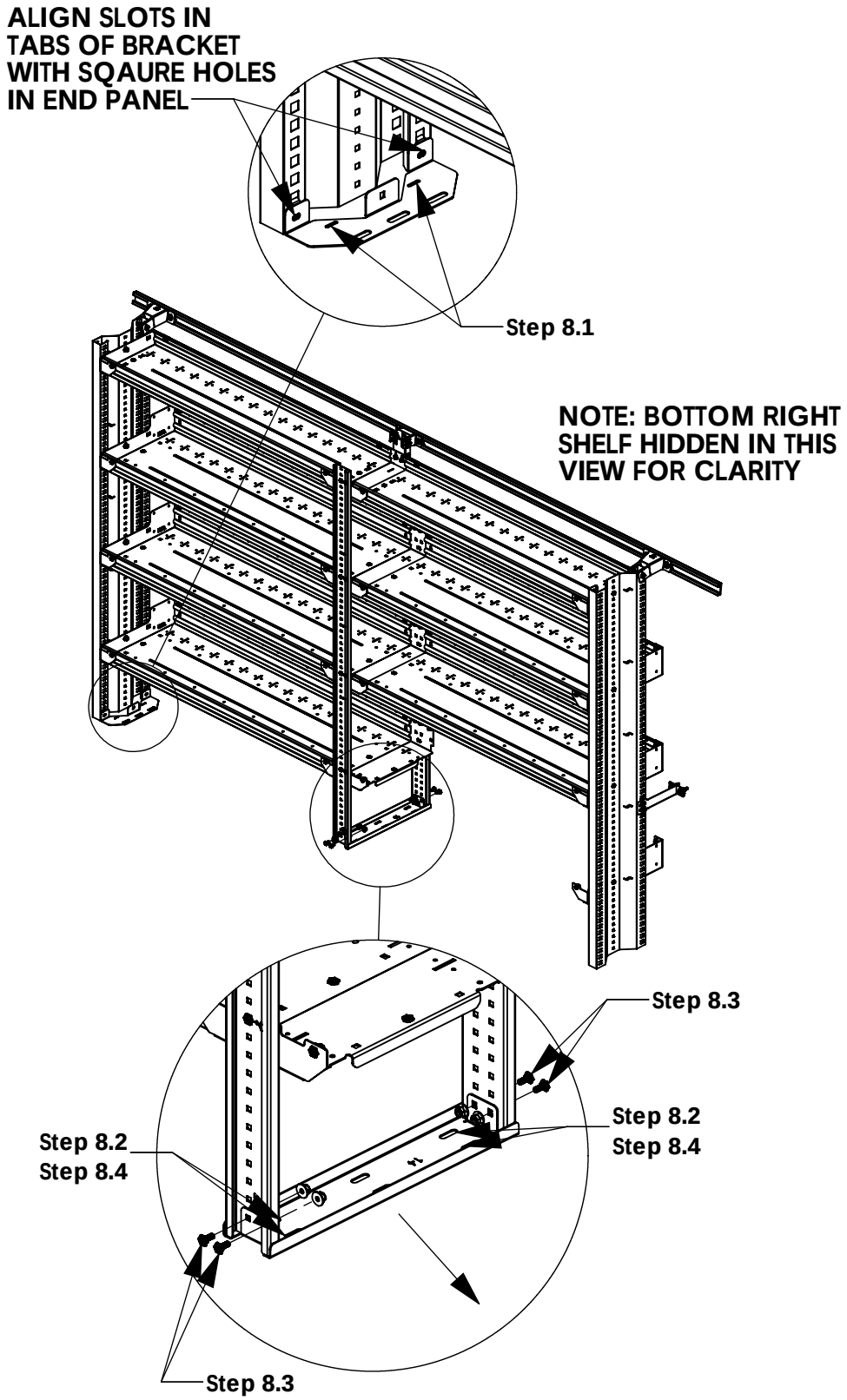


NOTE: SKIP STEPS 8.2 - 8.4 IF NOT INSTALLING CENTER SUPPORT

# STEP 9 - ATTACH END PANEL AND CENTER SUPPORT FLOOR MOUNTING BRACKETS

**Step 9.1**

**SET PLUSNUTS IN DRILLED HOLES FROM STEPS 8.1 - 8.4**

**FAS0091**
**(04 PLACES) - END PANEL FLOOR MOUNTING BRACKET**

**(04 PLACES) - CENTER SUPPORT FLOOR MOUNTING BRACKET**

**SHOWN ON NEXT PAGE**

**Step 9.2**

**SLIGHTLY LIFT SHELVING UNIT AND PLACE BRACKET UNDER END PANEL**

**FULLY TIGHTEN**
**FAS0994 AND FAS0018**
**(04 PLACES)**
**7/16" SOCKET**

**Step 9.3**

**REPLACE FASTENERS FROM STEP 8.3**

**SLIGHTLY LIFT SHELVING UNIT AND PLACE BRACKET UNDER CENTER SUPPORT POSTS**

**FULLY TIGHTEN**
**FAS0924 AND FAS0055**
**(04 PLACES)**
**7/16" SOCKET**

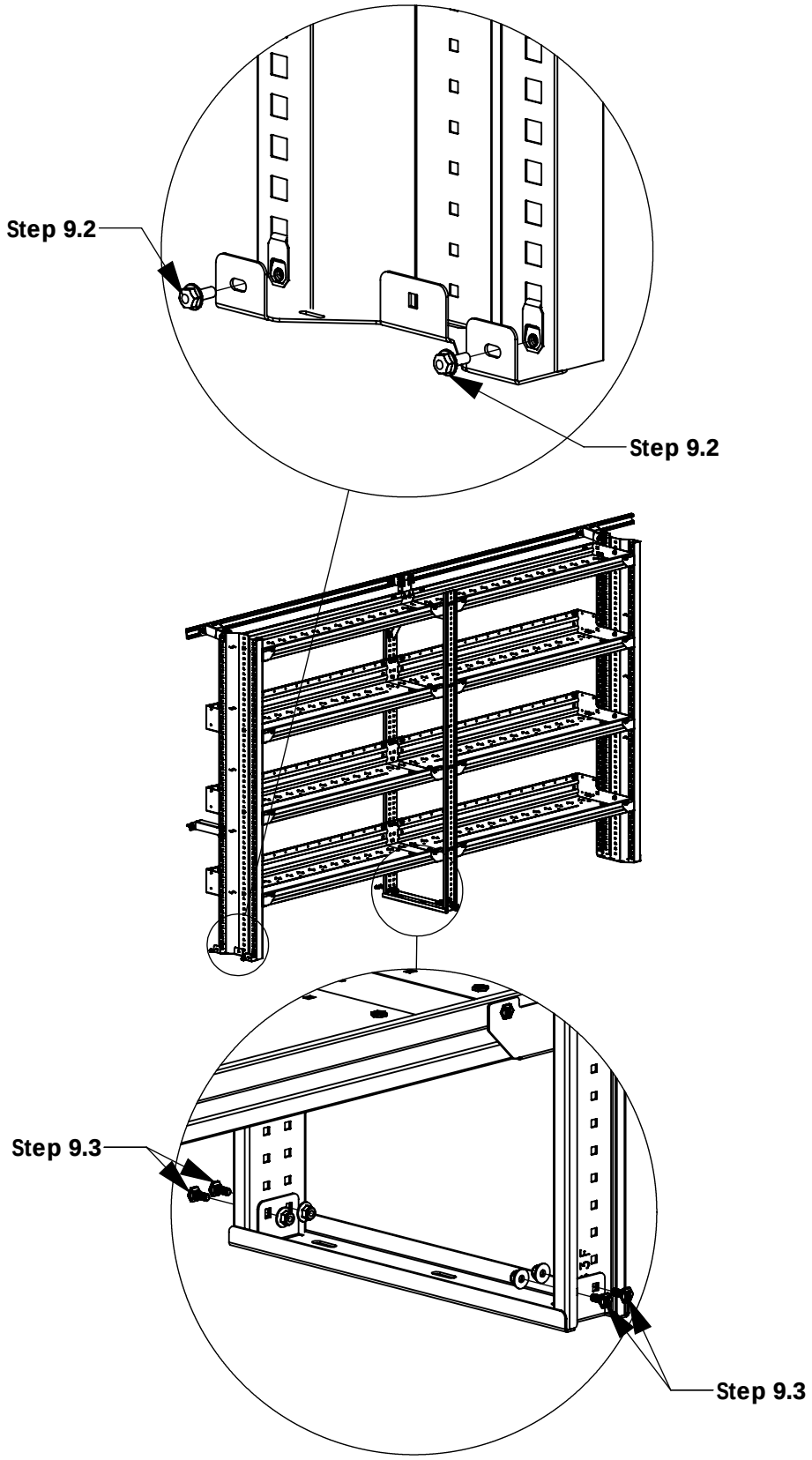


**NOTE: SKIP STEP 9.3 IF NOT INSTALLING CENTER SUPPORT**

# STEP 10 - ATTACH SHELVING UNIT TO VEHICLE FLOOR

**Step 10.1**

**FULLY TIGHTEN**
**FAS0092, FAS0098, FAS0086, FAS0091 (04 PLACES) 1/2" SOCKET**

**IF INSTALLING ON AN OEM OR AFTERMARKET FLOOR, OR IF HOLE IS IN RIB OF VEHICLE, USE 03927-1 OR 03927-2 TO CREATE LEVEL MOUNTING SURFACE**

**Step 10.2**

**FULLY TIGHTEN**
**FAS0092, FAS0098, FAS0086, FAS0091 (04 PLACES) 1/2" SOCKET**

**IF INSTALLING ON AN OEM OR AFTERMARKET FLOOR, OR IF HOLE IS IN RIB OF VEHICLE, USE 03927-1 OR 03927-2 TO CREATE LEVEL MOUNTING SURFACE**

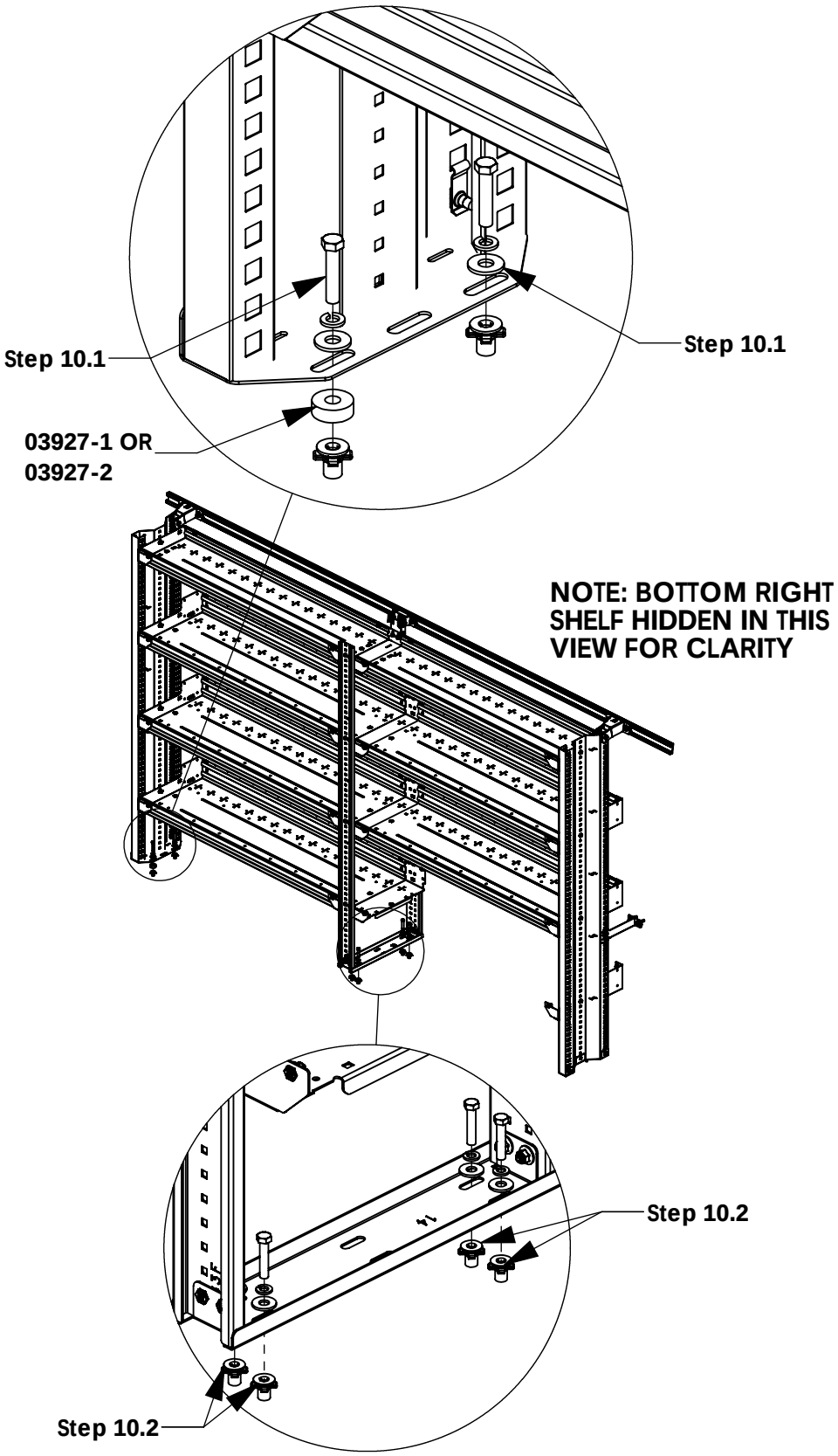


**NOTE: SKIP STEP 10.2 IF NOT INSTALLING CENTER SUPPORT**

# STEP 11 - TIGHTEN ALL LOOSE BOLTS FROM EARLIER STEPS

**Step 11.1**

**FULLY TIGHTEN BOLTS FROM STEPS 5.2 & 5.3**

**END PANEL RAIL MOUNTING BRACKETS**

**1/2" SOCKET**

**Step 11.2**

**FULLY TIGHTEN BOLTS FROM STEPS 6.1, 6.2A, 6.2B, & 6.3A**

**CENTER SUPPORT RAIL MOUNTING BRACKET**

**1/2" SOCKET**
**7/16" SOCKET**
**7/16" WRENCH**

**SKIP IF NOT INSTALLING CENTER SUPPORT**

**Step 11.2**

**FULLY TIGHTEN BOLTS FROM STEPS 7A.2, 7B.2, 7C.2, OR 7D.2**

**END PANEL BELTLINE BRACKETS**

**7/16" SOCKET**
**1/2" SOCKET**

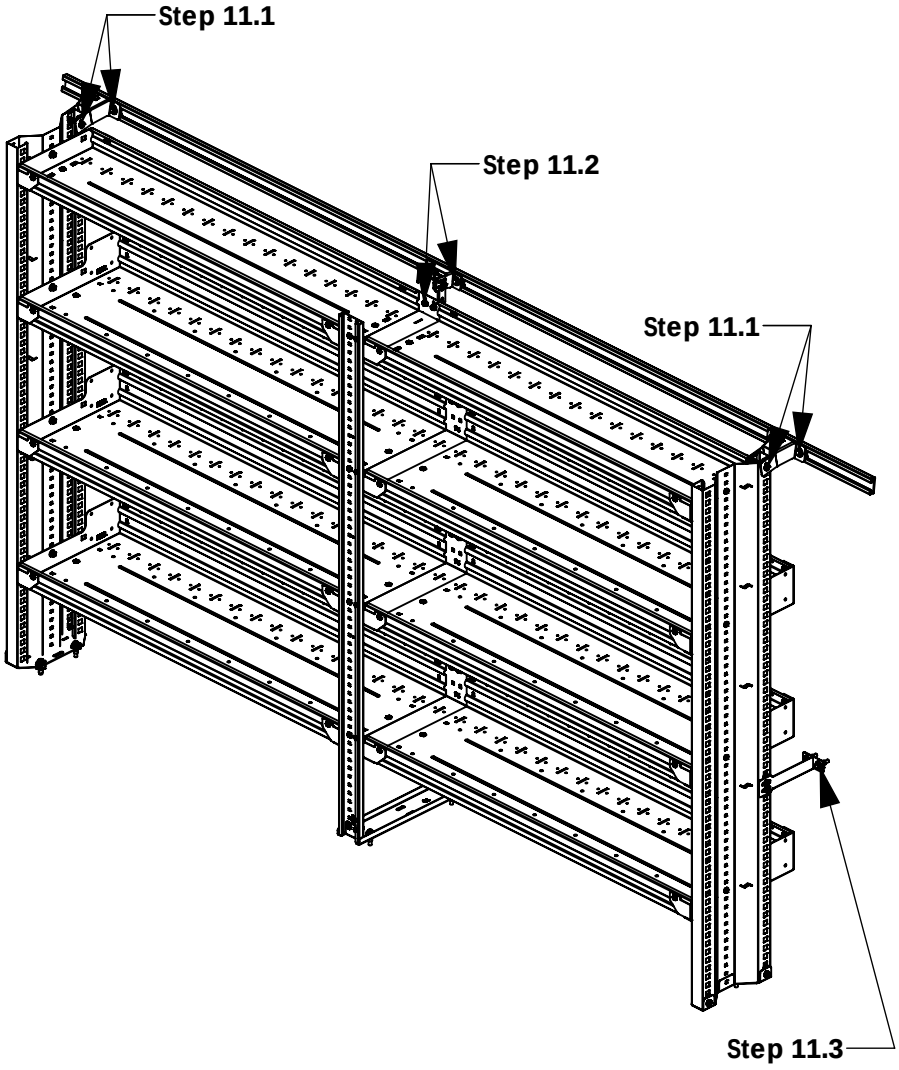


## INSTALLATION IS COMPLETE

**PLEASE PROCEED TO INSTRUCTIONS FOR ANY ACCESSORIES THAT YOU MAY BE MOUNTING TO YOUR SHELVING UNIT**

# END PANEL MOUNTING BRACKET KIT, FT, A

*PRODUCT WEIGHT*

**5.07 LBS**

*VEHICLE*

**FORD TRANSIT**

*CAPACITY*

**N/A**

*COLOR*

**ASC BLUE**

*CATALOG NUMBER*

**AEPMBKFTA**

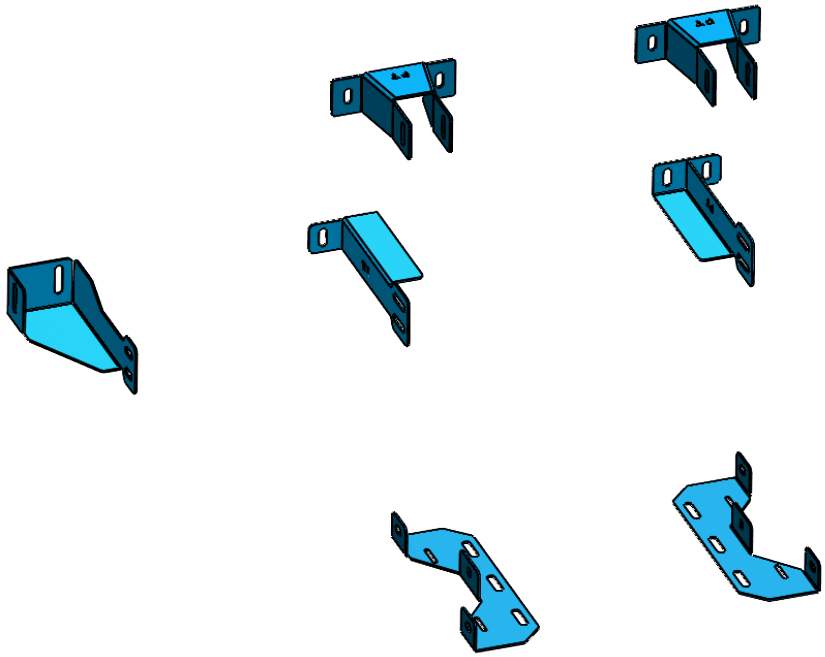

PRODUCT FEATURES

**Use this kit to mount Next-Gen Shelving to any Ford Transit. The brackets integrate with the end panels at the floor, the belt line, and the upper mounting rail.**

**SEE PAGE 2 FOR APPLICATION NOTES, ACCESSORIES AND OTHER PRODUCTS THAT WORK WITH THIS UNIT.**

# END PANEL MOUNTING BRACKET KIT, FT, A

*CATALOG NUMBER* **AEPMBKFTA**

*PRODUCT APPLICATION*

**This kit contains mounting brackets that connect to the end panels to the AD rails and the behicle belt line. AS well as securing the end panels to the floor.**

*ACCESSORIES THAT WILL WORK WITH THIS PRODUCT*

| *CATALOG NUMBER* | *DESCRIPTION (smart)* |
|---|---|
| AEP1049 | END PANEL KIT, 10X49, G |
| AEP1063 | END PANEL KIT, 10X63, G |
| AEP1068 | END PANEL KIT, 10X68, G |
| ARKFTL130DS | RAIL KIT,FD TR LR 130,DS |
| ARKFTL130PS | RAIL KIT,FD TR LR 130,PS |
| ARKFT130 | RAIL KIT,FD TR LR 130 |
| ARKFTL148DS | RAIL KIT,FD TR LR 148,DS |
| ARKFTL148PS | RAIL KIT,FD TR LR 148,PS |
| ARKFTL148 | RAIL KIT,FD TR LR 148 |
| ARKFTM130DS | RAIL KIT,FD TR MR 130,DS |
| ARKFTM130PS | RAIL KIT,FD TR MR 130,PS |
| ARKFTM130 | RAIL KIT,FD TR MR 130 |
| ARKFTM148DS | RAIL KIT,FD TR MR 148,DS |
| ARKFTM148PS | RAIL KIT,FD TR MR 148,PS |
| ARKFTM148 | RAIL KIT,FD TR MR 148 |

**The information contained in this document is the sole property of ADRIAN STEEL COMPANY. ADRIAN STEEL COMPANY retains the right to modify and/or change the product of its design at any time with prior notification.**

# END PANEL MOUNTING BRACKET KIT, FT, A

*CATALOG NUMBER* **AEPMBKFTA**

*ACCESSORIES THAT WILL WORK WITH THIS PRODUCT*

| *CATALOG NUMBER* | *DESCRIPTION (smart)* |
|---|---|
| ARKFTH148XDS | RAIL KIT,FD TR HR 148X,DS |
| ARKFTH148XPS | RAIL KIT,FD TR HR 148X,PS |
| ARKFTH148X | RAIL KIT,FD TR HR 148X |
| | |
| | |
| | |
| | |
| | |
| | |
| | |
| | |
| | |
| | |
| | |
| | |

**The information contained in this document is the sole property of ADRIAN STEEL COMPANY. ADRIAN STEEL COMPANY retains the right to modify and/or change the product of its design at any time with prior notification.**

ADRIAN STEEL
Cargo Management Solutions for Commercial Vehicles

# SHELF KIT, 2T, 14X42, G, 5

*PRODUCT WEIGHT*

**46.60 LBS**

*WIDTH X DEPTH X HEIGHT*

**See description below**

*CAPACITY*

**50LBS. PER SQ. FT., PER SHLEVING**

*COLOR*

**GRAY**

*CATALOG NUMBER*

**ASFK2T1442G5**

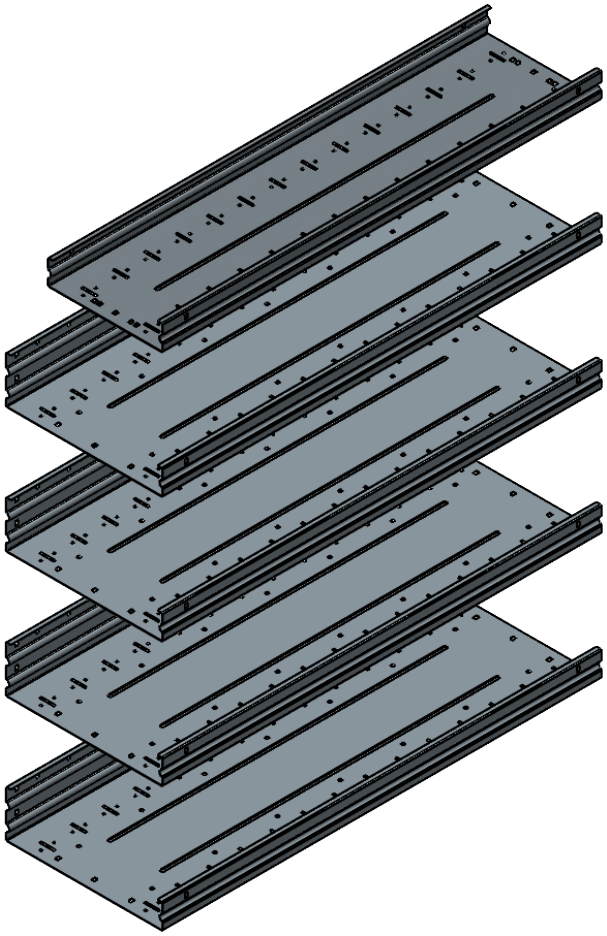

## PRODUCT FEATURES

**This kit contains a set of shelves. The shelves rest on the end caps which connect them to the end panel. The shelves have stiffening features for additional strength at the front lip, rear lip, and on the base of the shelf. The shelves have a standard hole pattern for mounting common accessories. This kit contains four 14" x 42" shelves and one 10" x 42" shelf.**

**SEE PAGE 2 FOR APPLICATION NOTES, ACCESSORIES AND OTHER PRODUCTS THAT WORK WITH THIS UNIT.**

ADRIAN STEEL
Cargo Management Solutions for Commercial Vehicles

# SHELF KIT, 2T, 14X42, G, 5

*CATALOG NUMBER* **ASFK2T1442G5**

## *PRODUCT APPLICATION*

**This kit contains 5 shelves, which are typical for use with 68" end panels. However, this kit is also compatible with 63" end panel.**

## *ACCESSORIES THAT WILL WORK WITH THIS PRODUCT*

| CATALOG NUMBER | DESCRIPTION (smart) |
|---|---|
| BIN614 | BIN, 6W X 14D |
| BIN1214 | BIN, 12W X 14D |
| DIVK141 | SHELF DIVIDER KIT, 14D,1 |
| DIVK144 | SHELF DIVIDER KIT, 14D,4 |
| DIVK148 | SHELF DIVIDER KIT, 14D,8 |
| AECK2T143 | END CAP KIT, 2T,14D, A, 3 |
| AECK2T144 | END CAP KIT, 2T,14D, A, 4 |
| AECK2T145 | END CAP KIT, 2T,14D, A, 5 |
| ADK1042 | DOOR KIT, 10X42, A |
| ADURK18 | DRAWER UNIT, RISER KIT, 18 |
| ADURK24 | DRAWER UNIT, RISER KIT, 24 |
| ADUK1418A2T | DRAWER UNIT, 14X18, A, 2T |
| ADUK1418A3C | DRAWER UNIT, 14X18, A, 3C |
| ADUK1418A4S | DRAWER UNIT, 14X18, A, 4S |
| ADUK1424A2T | DRAWER UNIT, 14X24, A, 2T |
| ADUK1424A3C | DRAWER UNIT, 14X24, A, 3C |
| ADUK1424A4S | DRAWER UNIT, 14X24, A, 4S |

**The information contained in this document is the sole property of ADRIAN STEEL COMPANY. ADRIAN STEEL COMPANY retains the right to modify and/or change the product of its design at any time with prior notification.**

ADRIAN STEEL
Cargo Management Solutions for Commercial Vehicles

# SHELF KIT, 2T, 14X72, G, 5

*PRODUCT WEIGHT*

**80.00 LBS**

*WIDTH X DEPTH X HEIGHT*

**See description below**

*CAPACITY*

**50LBS. PER SQ. FT., PER SHELVES**

*COLOR*

**GRAY**

*CATALOG NUMBER*

**ASFK2T1472G5**

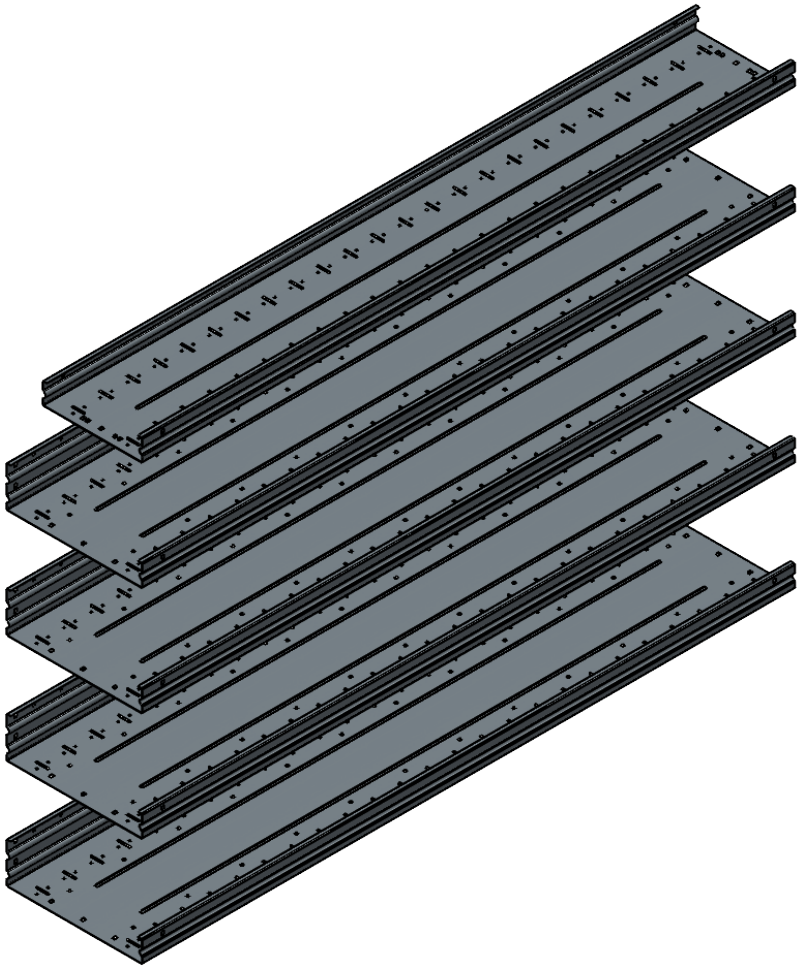

## PRODUCT FEATURES

**This kit contains a set of shelves. The shelves rest on the end caps which connect them to the end panel. The shelves have stiffening features for additional strength at the front lip, rear lip, and on the base of the shelf. The shelves have a standard hole pattern for mounting common accessories. This kit contains four 14" x 72" shelves and one 10" x 72" shelf.**

**SEE PAGE 2 FOR APPLICATION NOTES, ACCESSORIES AND OTHER PRODUCTS THAT WORK WITH THIS UNIT.**

ADRIAN STEEL
Cargo Management Solutions for Commercial Vehicles

# SHELF KIT, 2T, 14X72, G, 5

*CATALOG NUMBER* **ASFK2T1472G5**

## *PRODUCT APPLICATION*

**This kit contains 5 shelves, which are typical for use with 68" end panels. However, this kit is also compatible with 63" end panel.**

## *ACCESSORIES THAT WILL WORK WITH THIS PRODUCT*

| *CATALOG NUMBER* | *DESCRIPTION (smart)* |
|---|---|
| BIN614 | BIN, 6W X 14D |
| BIN1214 | BIN, 12W X 14D |
| DIVK141 | SHELF DIVIDER KIT, 14D,1 |
| DIVK144 | SHELF DIVIDER KIT, 14D,4 |
| DIVK148 | SHELF DIVIDER KIT, 14D,8 |
| AECK2T143 | END CAP KIT, 2T,14D, A, 3 |
| AECK2T144 | END CAP KIT, 2T,14D, A, 4 |
| AECK2T145 | END CAP KIT, 2T,14D, A, 5 |
| ADK1072 | DOOR KIT, 10X72, A |
| ADURK18 | DRAWER UNIT, RISER KIT, 18 |
| ADURK24 | DRAWER UNIT, RISER KIT, 24 |
| ADUK1418A2T | DRAWER UNIT, 14X18, A, 2T |
| ADUK1418A3C | DRAWER UNIT, 14X18, A, 3C |
| ADUK1418A4S | DRAWER UNIT, 14X18, A, 4S |
| ADUK1424A2T | DRAWER UNIT, 14X24, A, 2T |
| ADUK1424A3C | DRAWER UNIT, 14X24, A, 3C |
| ADUK1424A4S | DRAWER UNIT, 14X24, A, 4S |

**The information contained in this document is the sole property of ADRIAN STEEL COMPANY. ADRIAN STEEL COMPANY retains the right to modify and/or change the product of its design at any time with prior notification.**