RAIL KIT, SP HR 170X, DS

PRODUCT WEIGHT

9.74 LBS

VEHICLE

MERCEDES Sprinter ext. high roof 170" Wheel base

CAPACITY

N/A

COLOR

GRAY

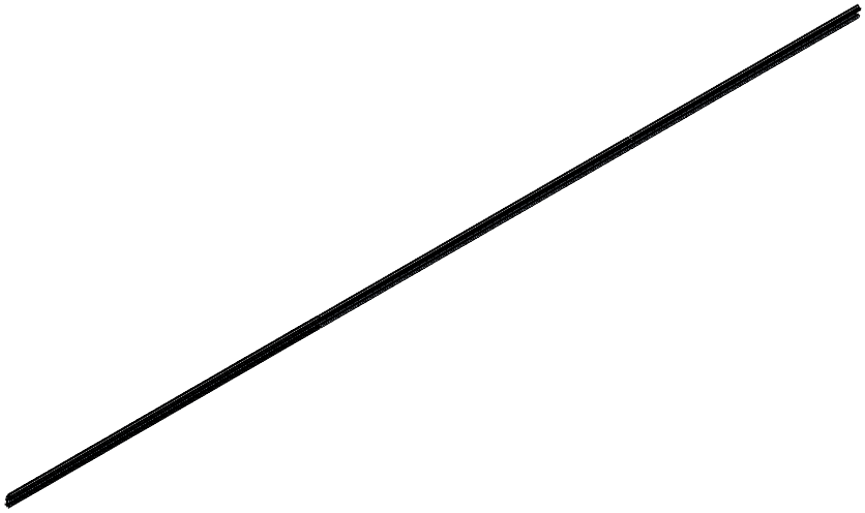

CATALOG NUMBER

ARKSPH170XDS

PRODUCT FEATURES

This product is designed for installation in the Mercedes Sprinter ext. high roof 170" wheel base. It is optimized for use with the next generation shelving. The rail kits includes brackets that span the window cavities to support the AD mounting rail.

SEE PAGE 2 FOR APPLICATION NOTES, ACCESSORIES AND OTHER PRODUCTS THAT WORK WITH THIS UNIT.

RAIL KIT, SP HR 170X, DS

CATALOG NUMBER **ARKSPH170XDS**

PRODUCT APPLICATION

This product is design for installation in the Mercedes Sprinter high ext. roof 170" wheel base. Optimized for use with the next generation shelving

All next generation shelving kits for sprinter high roof vans. See online fitment guide for full list of shelving units.

ACCESSORIES THAT WILL WORK WITH THIS PRODUCT

CATALOG NUMBER	*DESCRIPTION (smart)*
TDK	TIE DOWN SYSTEMS (1)

The information contained in this document is the sole property of ADRIAN STEEL COMPANY. ADRIAN STEEL COMPANY retains the right to modify and/or change the product of its design at any time with prior notification.

INSTR. NUMBER • INSARKSPH170X	PG: 1	REV: A
PART NUMBER • ARKSPH170XD PART NUMBER • ARKSPH170XP		
PART DESC. • RAIL KIT,SP HR 170X,DS PART DESC. • RAIL KIT,SP HR 170X,PS		

ITEM NO.	PART NUMBER	DESCRIPTION	QTY.
1	67586	RAIL, 59.28" SPR170X UPPER REAR	2
2	67584	RAIL, 43.88" SPR144 UPPER FRONT	1
3	36496-0	END CAP, RAIL EXTR #2	2

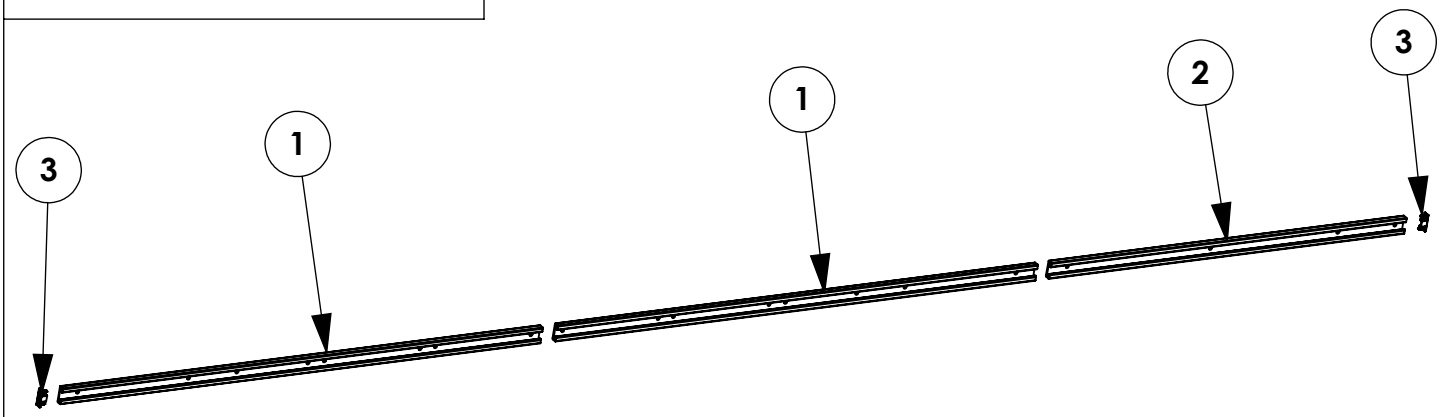

ARKSPH170XD

ITEM NO.	PART NUMBER	DESCRIPTION	QTY.
1	67586	RAIL, 59.28" SPR170X UPPER REAR	2
2	36496-0	END CAP, RAIL EXTR #2	2

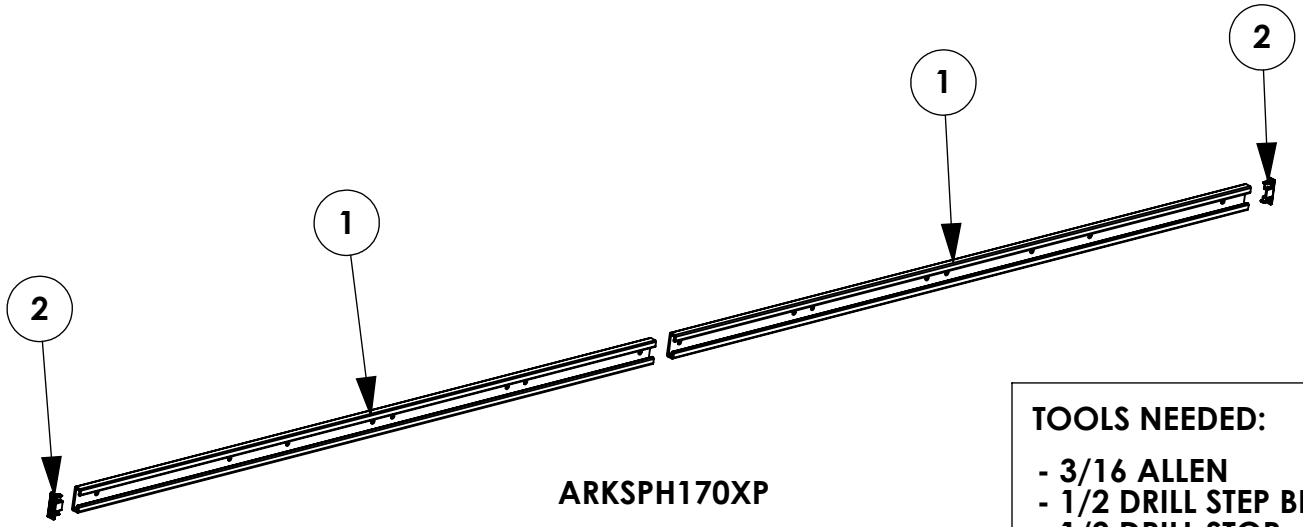

ARKSPH170XP

TOOLS NEEDED:

- **3/16 ALLEN**
- **1/2 DRILL STEP BIT**
- **1/2 DRILL STOP**
- **DRILL**
- **PLUSNUT TOOL**
-

BEST PRACTICES

GET TO KNOW THE VEHICLE - AT THE BEGINNING OF ANY INSTALLATION, CHECK THE LOCATION OF THE FUEL TANK, FUEL LINES, BRAKE LINES, HIGH VOLTAGE BATTERIES AND WIRING HARNESSES TO AVOID INJURY OR PROPERTY DAMAGE FROM TOOL CONTACT.

SEAL ALL EXTERIOR HOLES - ALL INSTALLATION HOLES SHOULD BE SEALED WITH BUTYL TAPE OR SILICON TO PREVENT WATER AND EXHAUST GASES FROM ENTERING THE VEHICLE.

CONTROL DRILL DEPTH - TO AVOID DAMAGE TO THE VEHICLE, USE A DRILL STOP OR CLEARED STEP BIT WHEN DRILLING INSTALLATION HOLES.

ALWAYS ADD PRIMER - WHEN ADDING INSTALLATION HOLES BE SURE TO USE A SELF-ETCHING PRIMER TO PREVENT CORROSION, FASTENER FAILURE AND INJURY.

MOUNTING POINTS MUST HAVE METAL-TO-METAL CONTACT - USE PROVIDED MOUNTING SPACERS TO ACCOMMODATE FOR VEHICLE FEATURES, CARPET OR SUBFLOORS.

PROVIDE CLEARANCE FOR SPACERS - IF THE INSTALLATION VEHICLE CONTAINS A CARPET OR SUBFLOOR, USE A 1-3/16" DIAMETER CARPET CUTTER (P/N: 31183-0) AT ALL MOUNTING LOCATIONS TO OPEN UP ROOM FOR SPACERS.

CHECK SPACER ORIENTATION - BE SURE THAT THE INDENT IN THE SPACER COVERS THE PLUSNUT HEAD; THIS ENSURES THE MOST METAL-TO-METAL CONTACT AND REDUCES VIBRATION.

PLUSNUT INSTALLATION - A PLUSNUT GUN IS RECOMMENDED FOR PLUSNUT INSTALLATION FOR ITS PRODUCTION SPEED. HOWEVER, A PLUSNUT SETTING TOOL CAN ALSO BE USED (P/N: 22200-0).

THRU-BOLT CLEARANCE - WHEN USING A THRU-BOLT AT ANY MOUNTING LOCATION, BE SURE THAT YOUR HOLE HAS 1/16" CLEARANCE.

BEST PRACTICE: ORGANIZE ALL FASTENERS & VERIFY THAT ALL ARE ACCOUNTED FOR

FASTENERS USED

BAG REFERENCE: **BAGARKSPH170XD**

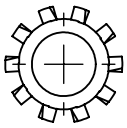

FAS0085
WASHER,LCK EXT, 5/16, ZP
QTY: 14

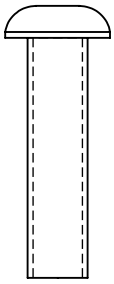

FAS0708
SCREW,BHCS, 5/16-18X1.25, ZN
QTY: 14

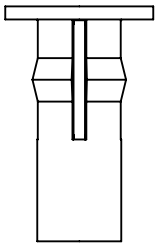

FAS0091
PLUSNUT, 5/16
QTY: 14

INTENTIONALLY LEFT BLANK

BEST PRACTICE: ORGANIZE ALL FASTENERS & VERIFY THAT ALL ARE ACCOUNTED FOR

FASTENERS USED

BAG REFERENCE: **BAGARKSPH170XP**

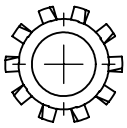

FAS0085
WASHER,LCK EXT, 5/16, ZP
QTY: 10

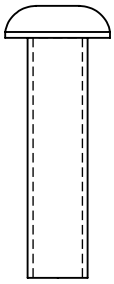

FAS0708
SCREW,BHCS, 5/16-18X1.25, ZN
QTY: 10

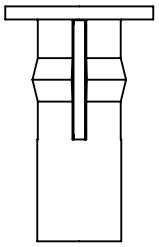

FAS0091
PLUSNUT, 5/16
QTY: 10

INTENTIONALLY LEFT BLANK

ARKSPH170XD TO BE USED WITH SPRINTER 170WB EXTENDED HIGH ROOF

Step 1.1
PLACE RAILS AGAINST THE WALL, USE 35335-0 TO ALIGN RAILS. MARK OEM HOLES AND NON-OEM HOLES TO BE DRILLED AND OPENED UP TO 1/2 DIA HOLES.

ALIGNMENT EXAMPLE

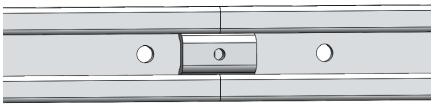

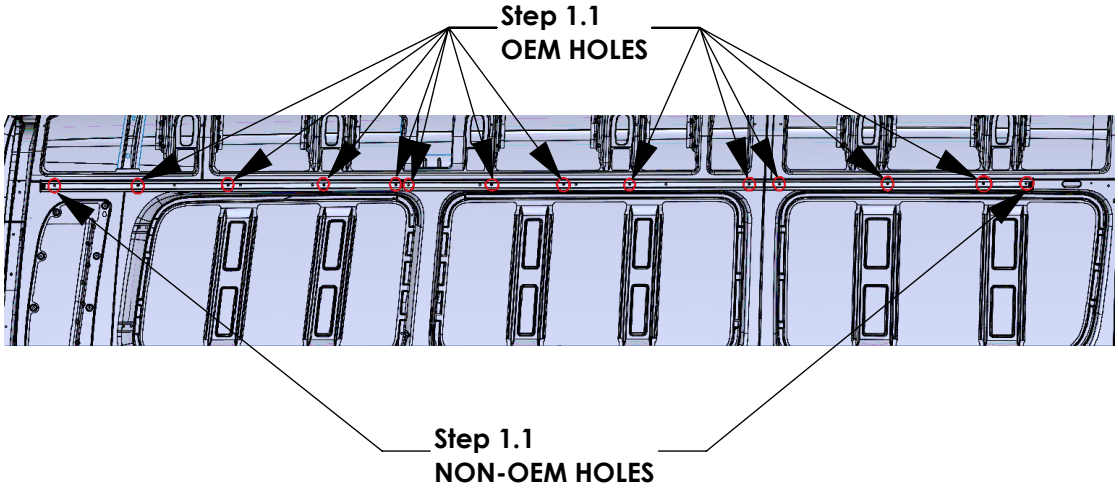

Step 2.1
REMOVED RAILS AFTER HOLES HAVE BEEN MARKED. DRILL HOLES USING 1/2 DRILL STEP BIT AND 1/2 DRILL STOP

1/2 DRILL STEP BIT
1/2 DRILL STOP
DRILL

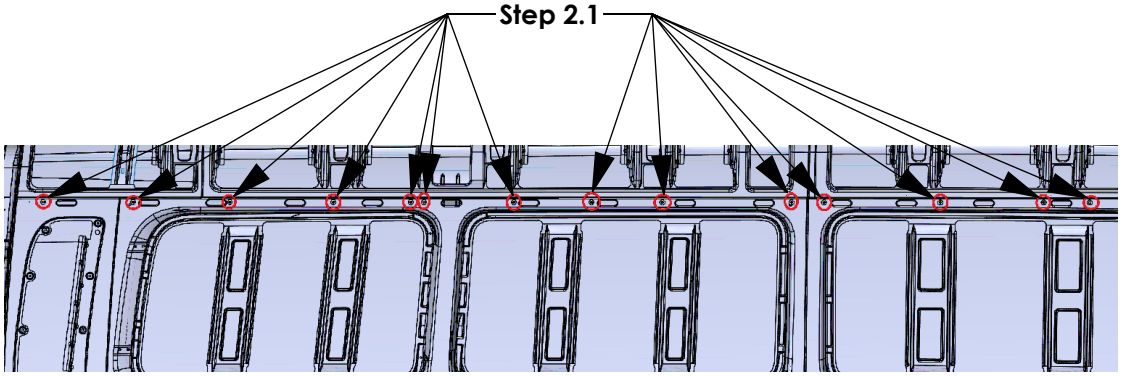

ARKSPH170XD TO BE USED WITH SPRINTER 170WB EXTENDED HIGH ROOF

Step 3.1
AFTER HOLES HAVE BEEN DRILLED, PLACE FAS0091 INTO HOLE. USE PLUSNUT TOOL TO SECURE PARTS TO WALL

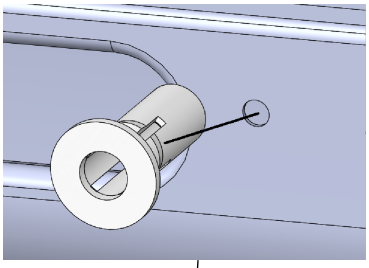

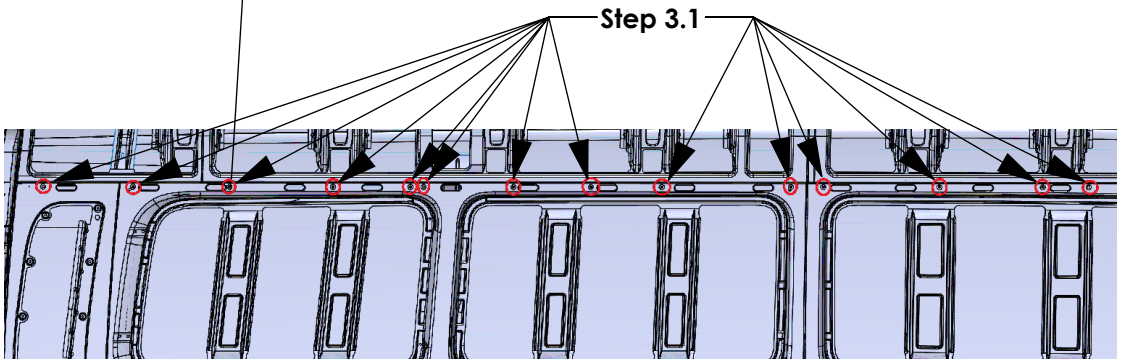

Step 4.1
WHEN PLACING RAILS AGAINST WALL USE 36503-0 TO ALIGN RAILS. ADD 36496-0 AT ENDS OF RAIL KI

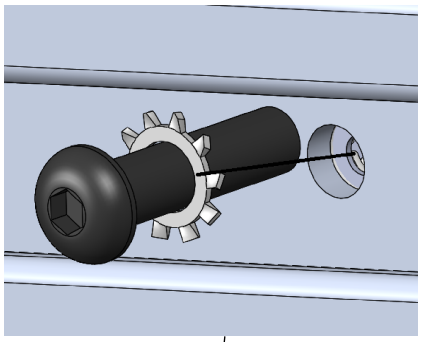

ALIGNMENT EXAMPLE

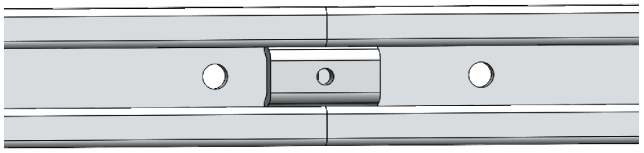

Step 4.2
FULLY TIGHTEN FAS0708 & FAS0085 INTO HOLES THAT ARE LINED UP WITH PLUSNUTS, USE 3/16 ALLEN

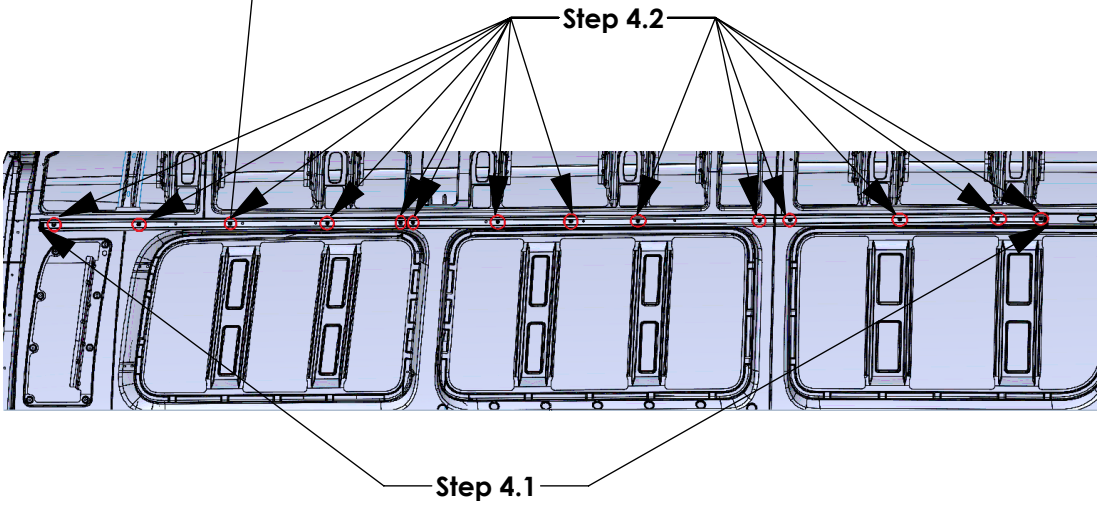

ARKSPH170XP TO BE USED WITH SPRINTER 170WB EXTENDED HIGH ROOF

Step 1.1
PLACE RAILS AGAINST THE WALL, USE 35335-0 TO ALIGN RAILS. MARK OEM HOLES AND NON-OEM HOLES TO BE DRILLED AND OPENED UP TO 1/2 DIA HOLES.

ALIGNMENT EXAMPLE

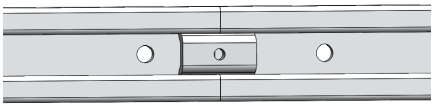

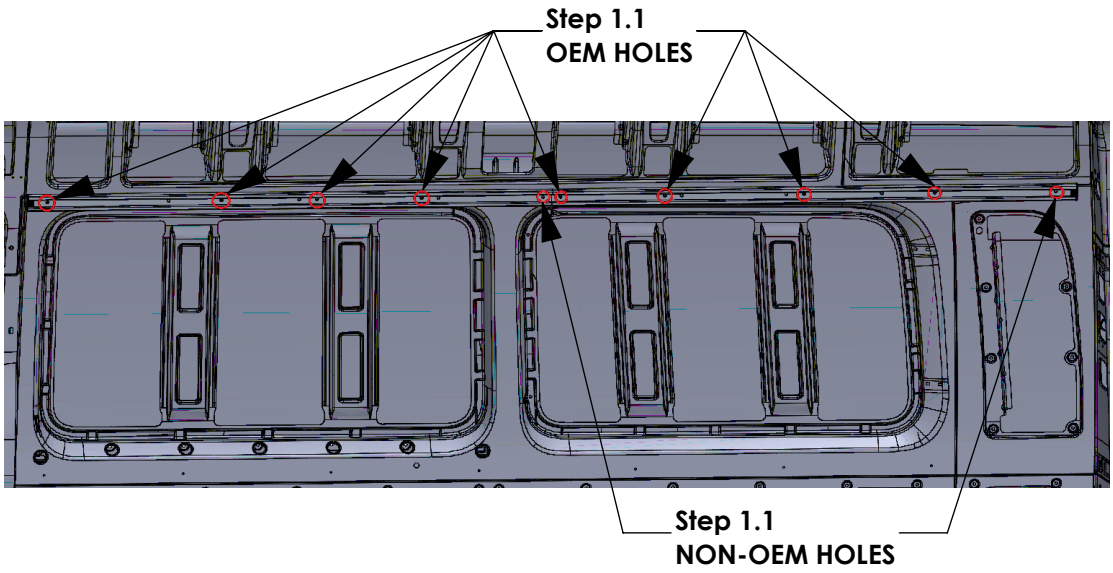

Step 2.1
REMOVED RAILS AFTER HOLES HAVE BEEN MARKED. DRILL HOLES USING 1/2 DRILL STEP BIT AND 1/2 DRILL STOP

1/2 DRILL STEP BIT
1/2 DRILL STOP
DRILL

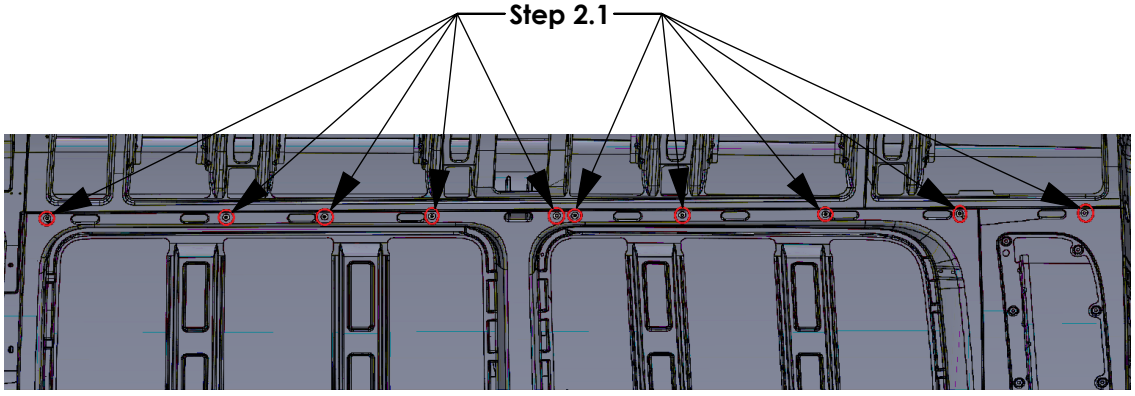

ARKSPH170XP TO BE USED WITH SPRINTER 170WB EXTENDED HIGH ROOF

Step 3.1
AFTER HOLES HAVE BEEN DRILLED, PLACE FAS0091 INTO HOLE. USE PLUSNUT TOOL TO SECURE PARTS TO WALL

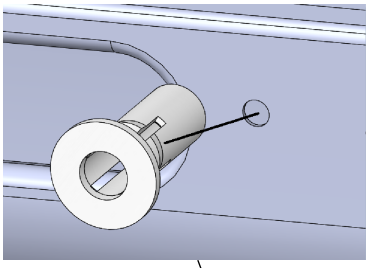

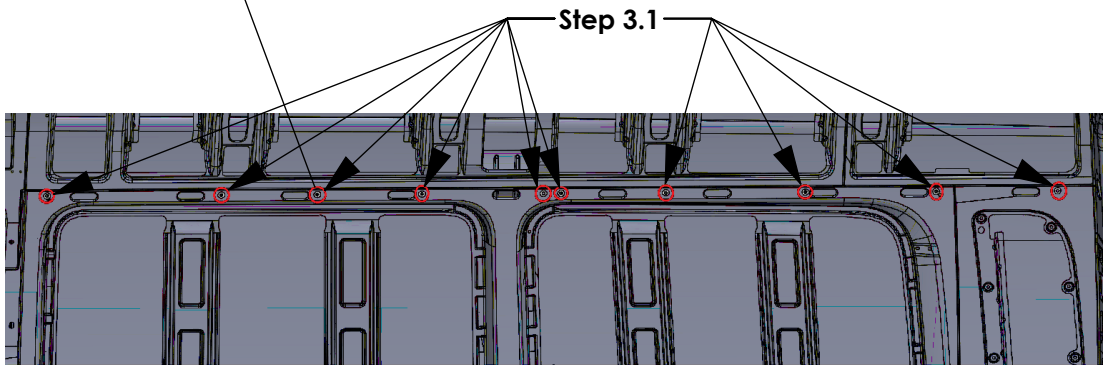

Step 4.1
WHEN PLACING RAILS AGAINST WALL USE 36503-0 TO ALIGN RAILS. ADD 36496-0 AT ENDS OF RAIL KI

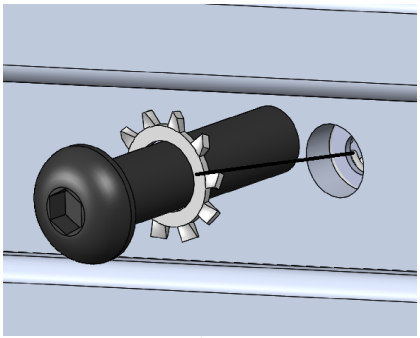

ALIGNMENT EXAMPLE

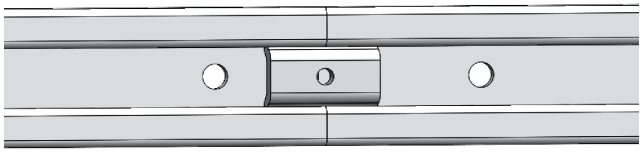

Step 4.2
FULLY TIGHTEN FAS0708 & FAS0085 INTO HOLES THAT ARE LINED UP WITH PLUSNUTS, USE 3/16 ALLEN

