RAIL KIT, PM 136, DS

PRODUCT WEIGHT

7.01 LBS

VEHICLE

RAM Promaster 136" wheel base

CAPACITY

N/A

COLOR

GRAY

CATALOG NUMBER

ARKPM136DS



PRODUCT FEATURES

This product is design for installation in the RAM Promaster 136" wheel base. It is optimized with the next generation shelving. The rail kit includes brackets that span the window cavities to support the AD mounting rail.

SEE PAGE 2 FOR APPLICATION NOTES, ACCESSORIES AND OTHER PRODUCTS THAT WORK WITH THIS UNIT.

RAIL KIT, PM 136, DS

CATALOG NUMBER **ARKPM136DS**

PRODUCT APPLICATION

This product is design for installation in the RAM Promaster 136" wheel base. Optimized for use with the next generation shelving.

All next generation shelving kits for promaster vans. See online fitment guide for full list of shelving units.

ACCESSORIES THAT WILL WORK WITH THIS PRODUCT

CATALOG NUMBER	*DESCRIPTION (smart)*
TDK	TIE DOWN SYSTEM (1)

The information contained in this document is the sole property of ADRIAN STEEL COMPANY. ADRIAN STEEL COMPANY retains the right to modify and/or change the product of its design at any time with prior notification.

INSTR. NUMBER • INSARKPM136	PG: 1	REV: A
PART NUMBER • ARKPM136DS PART NUMBER • ARKPM136PS		
PART DESC. • RAIL KIT, PM, 136, DS PART DESC. • RAIL KIT, PM, 136, PS		

ITEM NO.	PART NUMBER	DESCRIPTION	QTY.
1	45717	RAIL 106" STRSD AD SERIES	1
2	45715-G	C-BRKT, SS, PROMASTER	1
3	45718-G	RAIL MTG BRKT, PROMASTER	3
4	36496-0	END CAP, RAIL EXTR #2	2

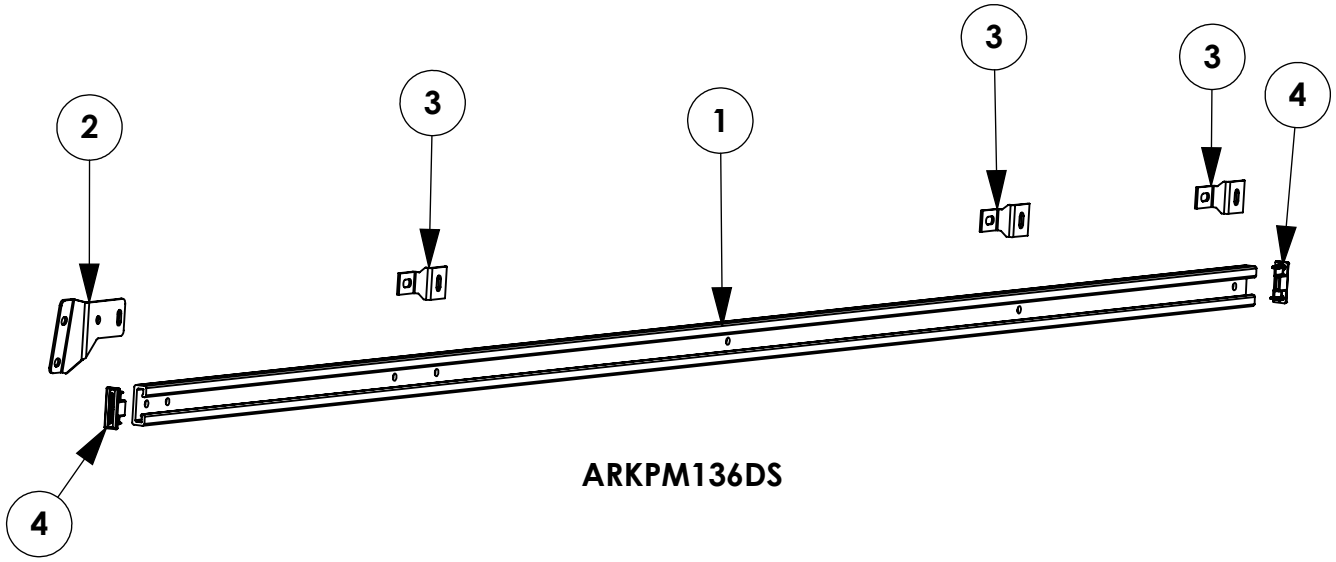

ARKPM136DS

ITEM NO.	PART NUMBER	DESCRIPTION	QTY.
1	45713	RAIL 56" CRBSD AD SERIES	1
2	45718-G	RAIL MTG BRKT, PROMASTER	1
3	45716-G	C-BRKT, CS, PROMASTER	1
4	36496-0	END CAP, RAIL EXTR #2	2

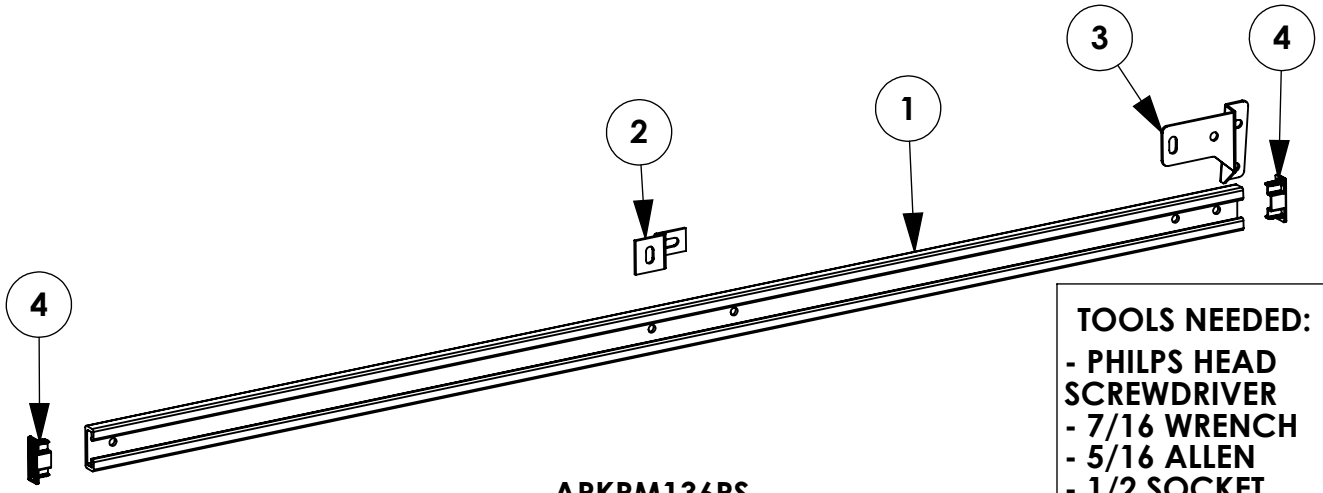

ARKPM136PS

TOOLS NEEDED:

- **PHILPS HEAD SCREWDRIVER**
- **7/16 WRENCH**
- **5/16 ALLEN**
- **1/2 SOCKET**
- **1/2 DRILL STEP BIT**
- **1/2 DRILL STOP**
- **PLUSNUT TOOL**
- **DRILL**

BEST PRACTICES

GET TO KNOW THE VEHICLE - AT THE BEGINNING OF ANY INSTALLATION, CHECK THE LOCATION OF THE FUEL TANK, FUEL LINES, BRAKE LINES, HIGH VOLTAGE BATTERIES AND WIRING HARNESSES TO AVOID INJURY OR PROPERTY DAMAGE FROM TOOL CONTACT.

SEAL ALL EXTERIOR HOLES - ALL INSTALLATION HOLES SHOULD BE SEALED WITH BUTYL TAPE OR SILICON TO PREVENT WATER AND EXHAUST GASES FROM ENTERING THE VEHICLE.

CONTROL DRILL DEPTH - TO AVOID DAMAGE TO THE VEHICLE, USE A DRILL STOP OR CLEARED STEP BIT WHEN DRILLING INSTALLATION HOLES.

ALWAYS ADD PRIMER - WHEN ADDING INSTALLATION HOLES BE SURE TO USE A SELF-ETCHING PRIMER TO PREVENT CORROSION, FASTENER FAILURE AND INJURY.

MOUNTING POINTS MUST HAVE METAL-TO-METAL CONTACT - USE PROVIDED MOUNTING SPACERS TO ACCOMMODATE FOR VEHICLE FEATURES, CARPET OR SUBFLOORS.

PROVIDE CLEARANCE FOR SPACERS - IF THE INSTALLATION VEHICLE CONTAINS A CARPET OR SUBFLOOR, USE A 1-3/16" DIAMETER CARPET CUTTER (P/N: 31183-0) AT ALL MOUNTING LOCATIONS TO OPEN UP ROOM FOR SPACERS.

CHECK SPACER ORIENTATION - BE SURE THAT THE INDENT IN THE SPACER COVERS THE PLUSNUT HEAD; THIS ENSURES THE MOST METAL-TO-METAL CONTACT AND REDUCES VIBRATION.

PLUSNUT INSTALLATION - A PLUSNUT GUN IS RECOMMENDED FOR PLUSNUT INSTALLATION FOR ITS PRODUCTION SPEED. HOWEVER, A PLUSNUT SETTING TOOL CAN ALSO BE USED (P/N: 22200-0).

THRU-BOLT CLEARANCE - WHEN USING A THRU-BOLT AT ANY MOUNTING LOCATION, BE SURE THAT YOUR HOLE HAS 1/16" CLEARANCE.

BEST PRACTICE: ORGANIZE ALL FASTENERS & VERIFY THAT ALL ARE ACCOUNTED FOR

FASTENERS USED

BAG REFERENCE: **BAGARKPM136DS**

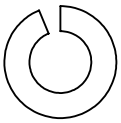

FAS0098
WASHER, LOCK, SPLIT, 5/16, ZP
QTY: 5

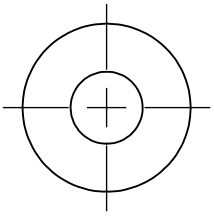

FAS0086
WASHER,FLAT USS, 5/16, ZP
QTY: 5

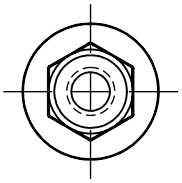

FAS0055
NUT, HEX NLK FLG, 1/4-20, ZP
QTY: 5

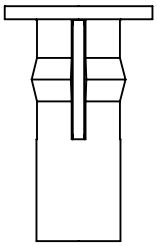

FAS0091
PLUSNUT, 5/16
QTY: 6

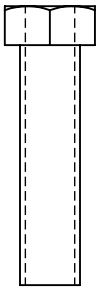

FAS0093
SCREW, HEX HEAD, 5/16-18X1.25
QTY: 5

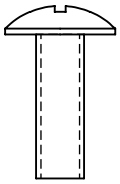

FAS0062
SCREW,THP, 1/4-20X.75, G5 ZP
QTY: 5

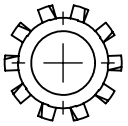

FAS0085
WASHER, LCK EXT, 5/16, ZP
QTY: 1

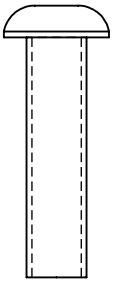

FAS0708
SCREW,BHCS 5/16-18X1.25 ZN
QTY: 1

INTENTIONALLY LEFT BLANK

BEST PRACTICE: ORGANIZE ALL FASTENERS & VERIFY THAT ALL ARE ACCOUNTED FOR

PAGE: **5**

FASTENERS USED

BAG REFERENCE: **BAGARKPM136PS**

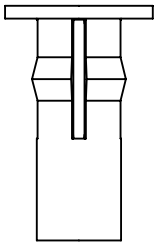

FAS0091
PLUSNUT, 5/16
QTY: 4

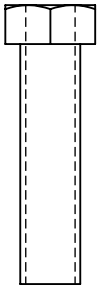

FAS0093
SCREW, HEX HEAD,
5/16-18X1.25
QTY: 3

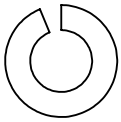

FAS0098
WASHER, LOCK, SPLIT,
5/16, ZP
QTY: 3

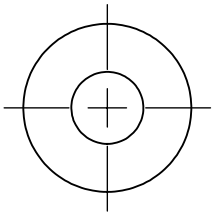

FAS0086
WASHER,FLAT USS,
5/16, ZP
QTY: 3

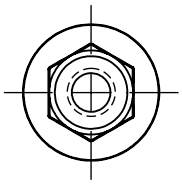

FAS0055
NUT, HEX NLK FLG,
1/4-20, ZP
QTY: 3

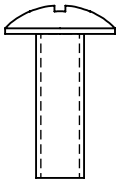

FAS0062
SCREW,THP,
1/4-20X.75, G5 ZP
QTY: 3

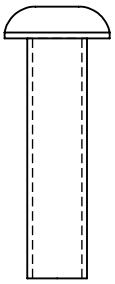

FAS0708
SCREW,BHCS
5/16-18X1.25 ZN
QTY: 1

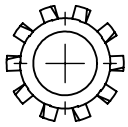

FAS0085
WASHER, LCK EXT,
5/16, ZP
QTY: 1

INTENTIONALLY LEFT BLANK

ARKPM136DS TO BE USED WITH PROMASTER HIGH ROOF 118WB

Step 1.1
USE FAS0062 & FAS0055 TO MOUNT 45715 TO RAIL 47548

PHILP HEAD SCREWDRIVER
7/16 OPEN WRENCH

Step 1.2
PLACE (2) 36496-0 AT ENDS OF RAILS

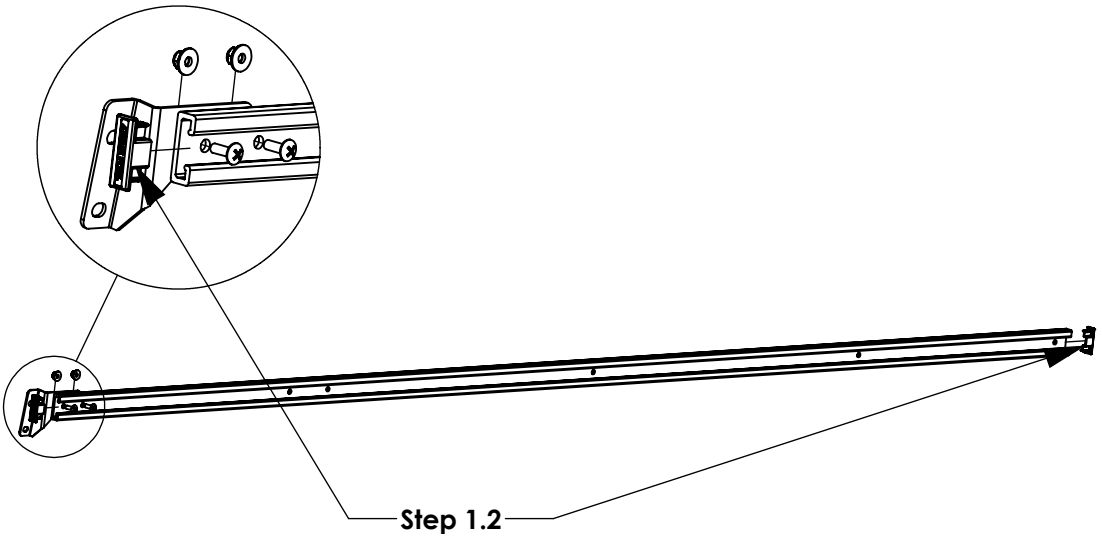

Step 2.1
DRILL THE 2 OEM HOLES SHOWN TO 1/2 DIA HOLES

1/2 DRILL STEP BIT
1/2 DRILL STOP DRILL

Step 2.2
MEASURE 3/4" TO THE APPROXAMITE CENTER OF THE SLOT TO DRILL 1/2 DIA HOLE

1/2 DRILL STEP BIT
1/2 DRILL STOP DRILL

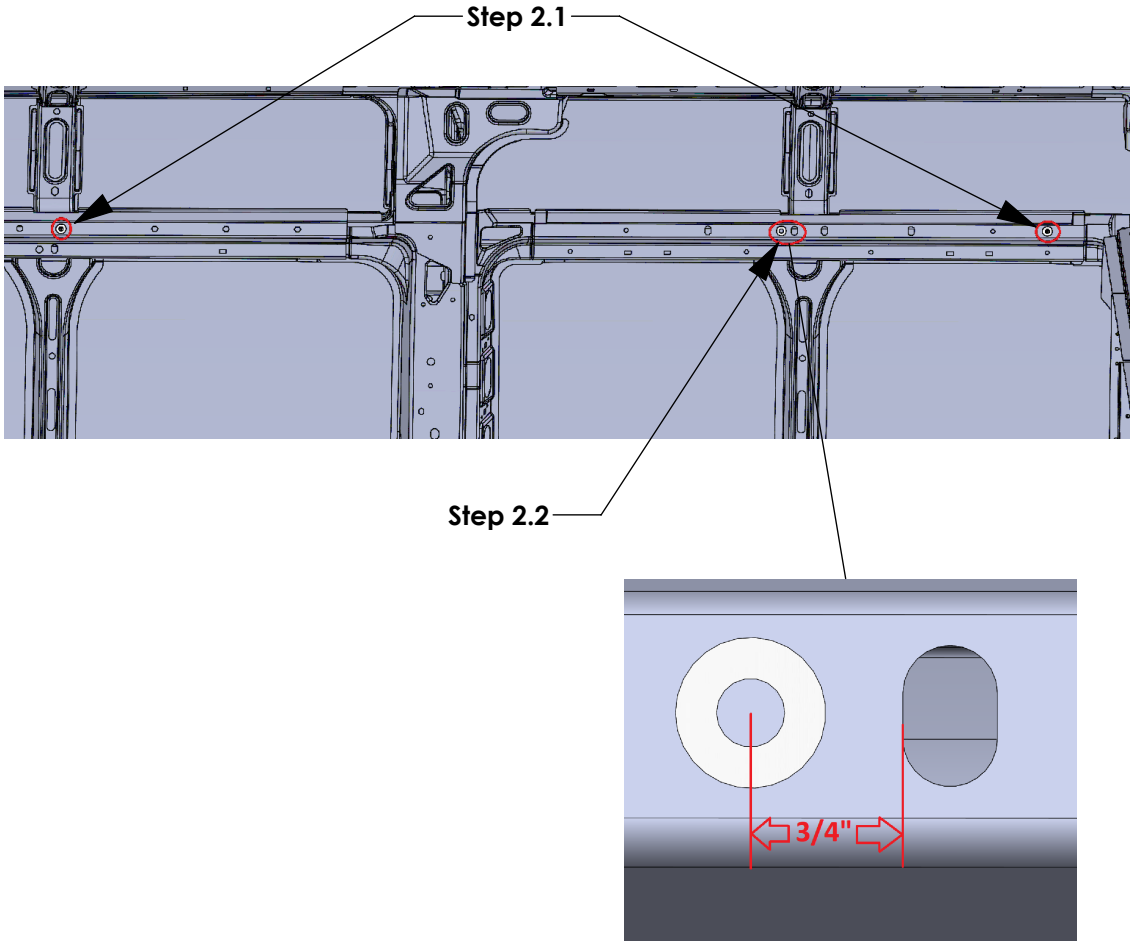

ARKPM136DS TO BE USED WITH PROMASTER HIGH ROOF 118WB

Step 3.1
AFTER HOLES HAVE BEEN DRILLED PLACE FAS0091 INTO HOLES, USE PLUSNUT TOOL TO SECURE THEM

PLUSNUT TOOL

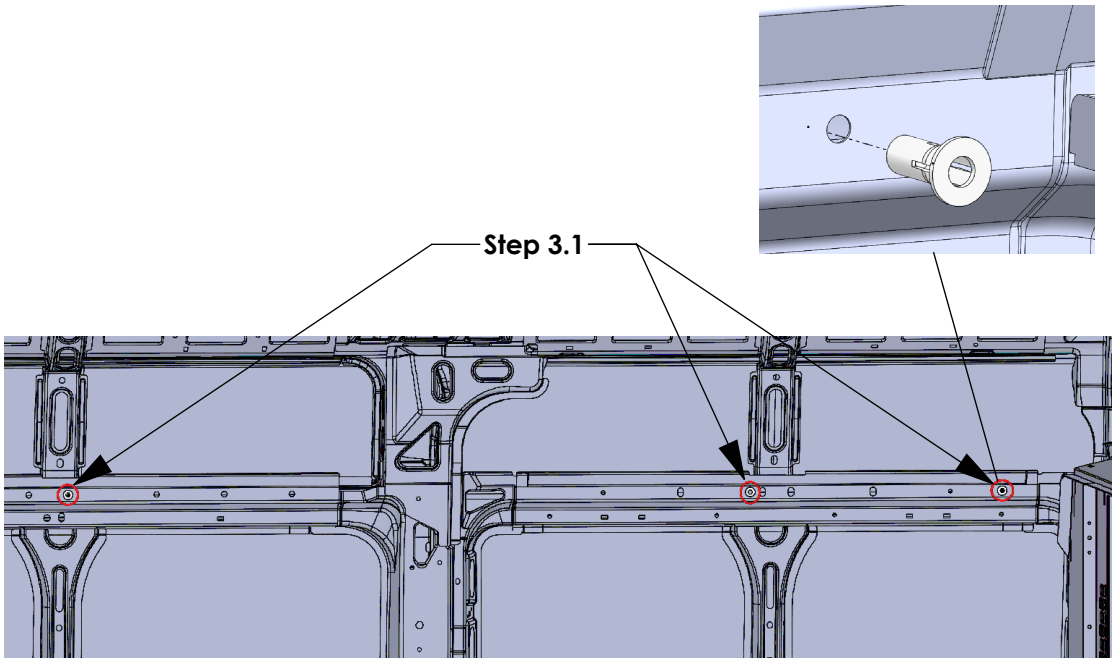

Step 3.2
ALIGN BRACKET 45718 TO PLUSNUT, KEEP BRACKETS PARALLEL WITH FLOOR. FULLY TIGHTEN FAS0093, FAS0098, & FAS0086 TO SECURE TO WALL. LOOSELY TIGHTEN BRACKET UNTIL STEP 5.1

1/2 SOCKET
DRILL

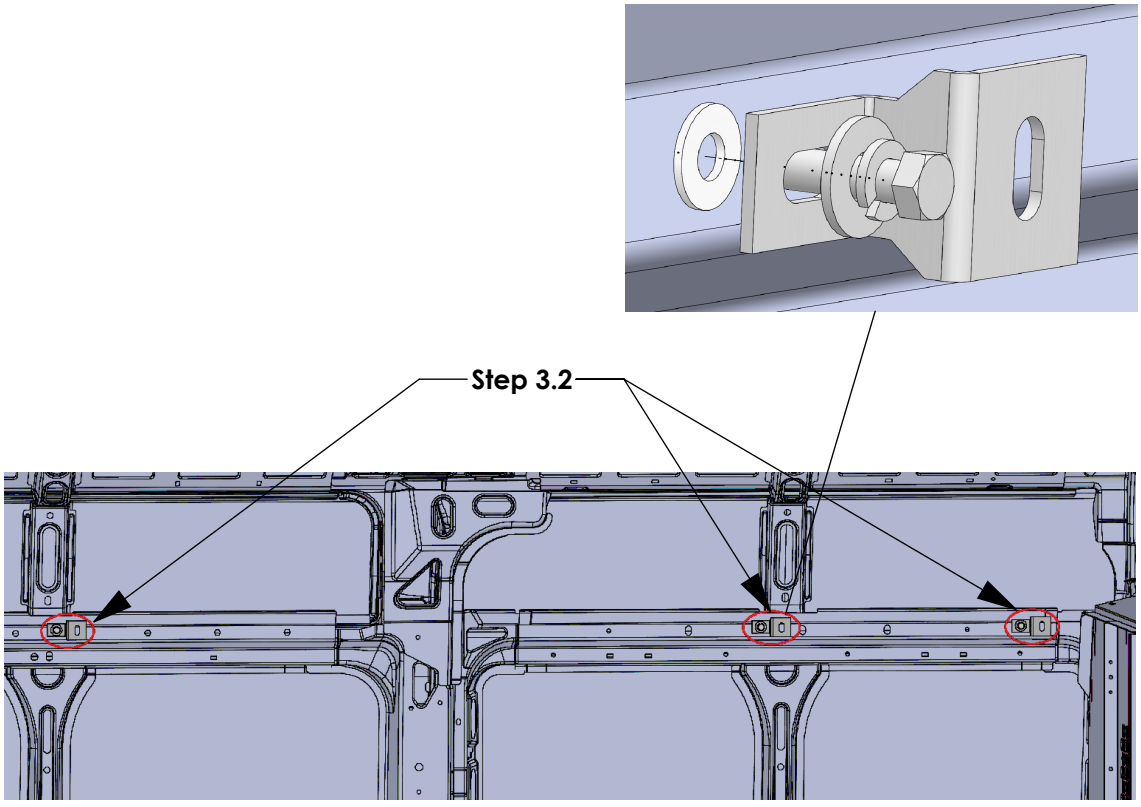

ARKPM136DS TO BE USED WITH PROMASTER HIGH ROOF 118WB

Step 4.1
PLACE ASSEMBLED RAIL (Step 1.1) AND ALIGN HOLES WITH INSTALLED BRACKET. MARK HOLE SHOWN TO DRILL 1/2 DIA HOLES

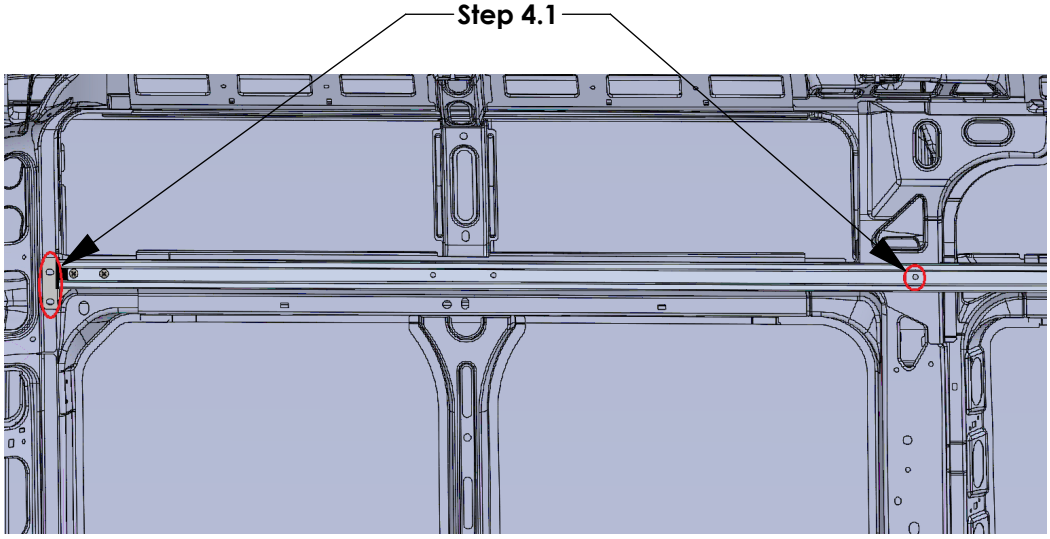

Step 4.2
AFTER HOLES HAVE BEEN DRILLED PLACE FAS0091 INTO HOLES, USE PLUSNUT TOOL TO SECURE THEM

PLUSNUT TOOL

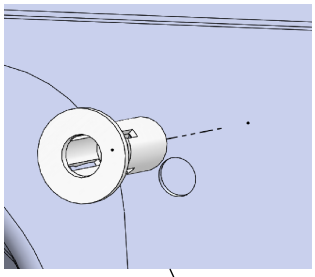

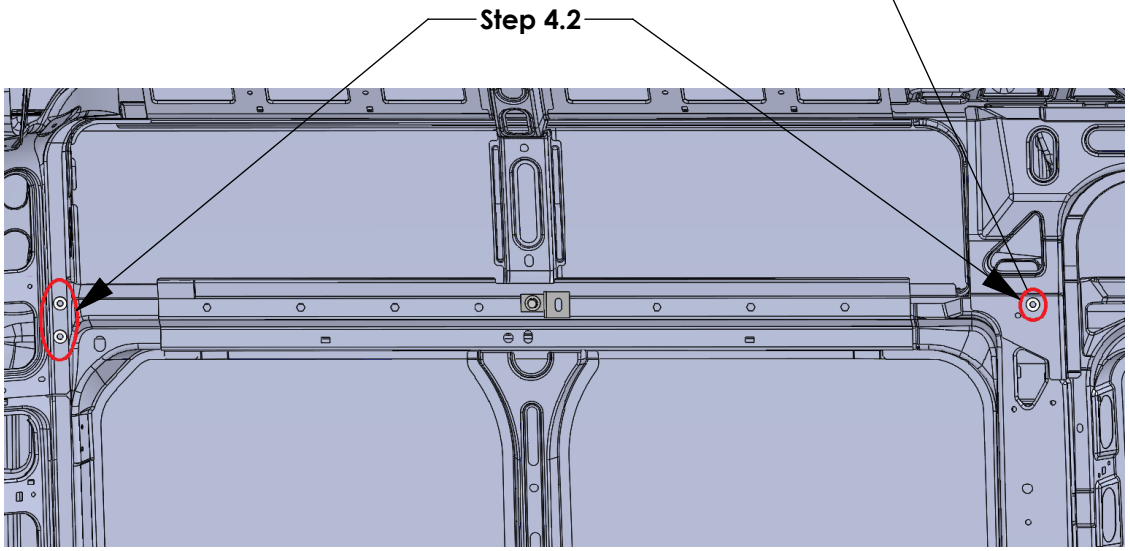

ARKPM136DS TO BE USED WITH PROMASTER HIGH ROOF 118WB

Step 5.1
PLACE ASSEMBLED RAIL BACK INTO PLACE LINING UP WITH BRACKETS. FULLY TIGHTEN FAS0062 & FAS0055 TO MOUNT TO BRACKETS

PHILPS HEAD SCREWDRIVER
7/16 WRENCH

Step 5.2
FULLY TIGHTEN FAS0708 & FAS0085 INTO C-PILLAR MOUNTING HOLE

5/16 ALLEN

Step 5.3
FULLY TIGHTEN FAS0093, FAS0098, & FAS0086 INTO BRACKET 45715-G

1/2 SOCKET DRILL

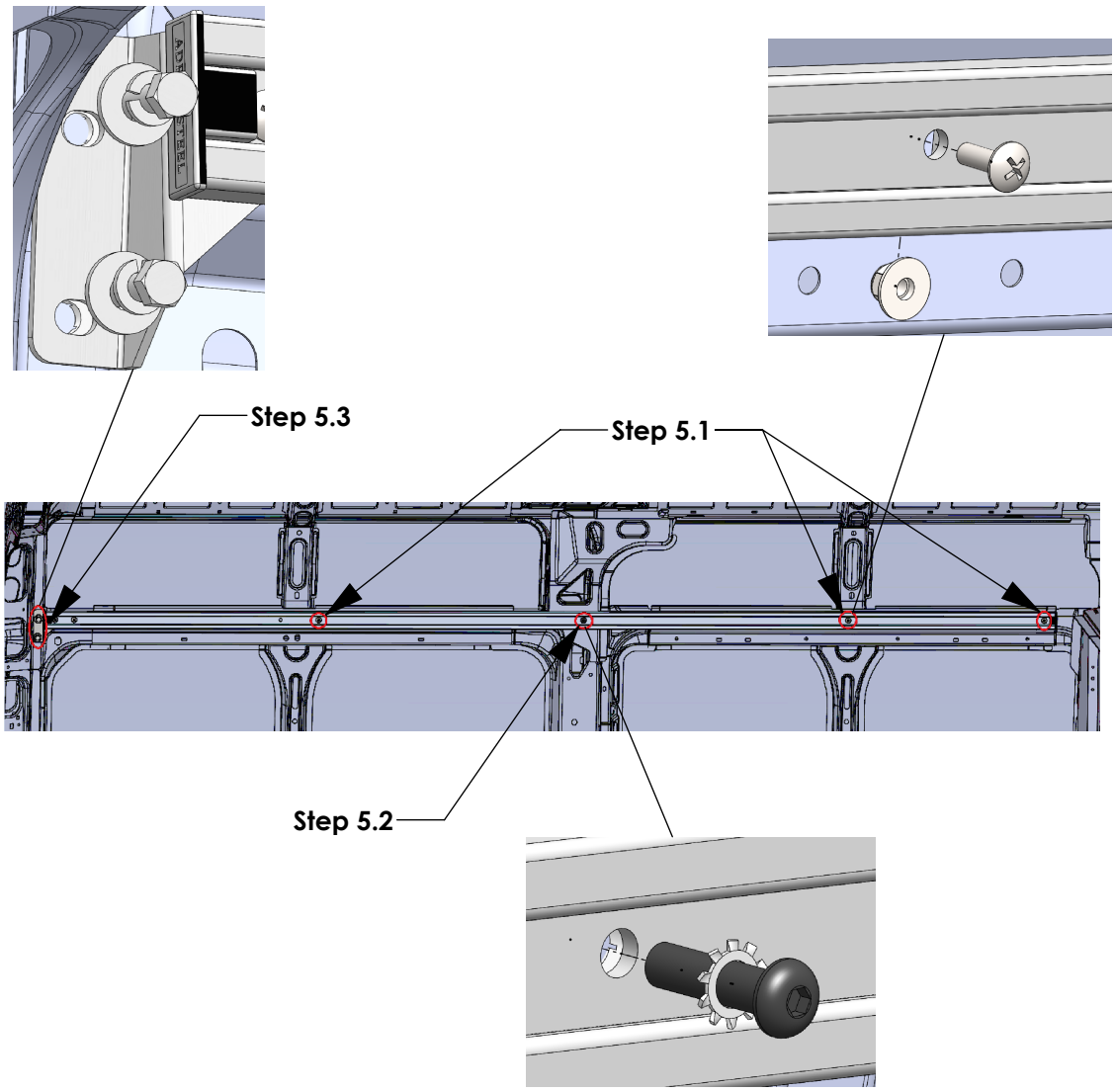

ARKPM136PS TO BE USED WITH PROMASTER HIGH ROOF 118WB

Step 1.1
USE FAS0062 & FAS0055 TO MOUNT 45715 TO RAIL 47548

PHILP HEAD SCREWDRIVER
7/16 OPEN WRENCH

Step 1.2
PLACE (2) 36496-0 AT ENDS OF RAILS

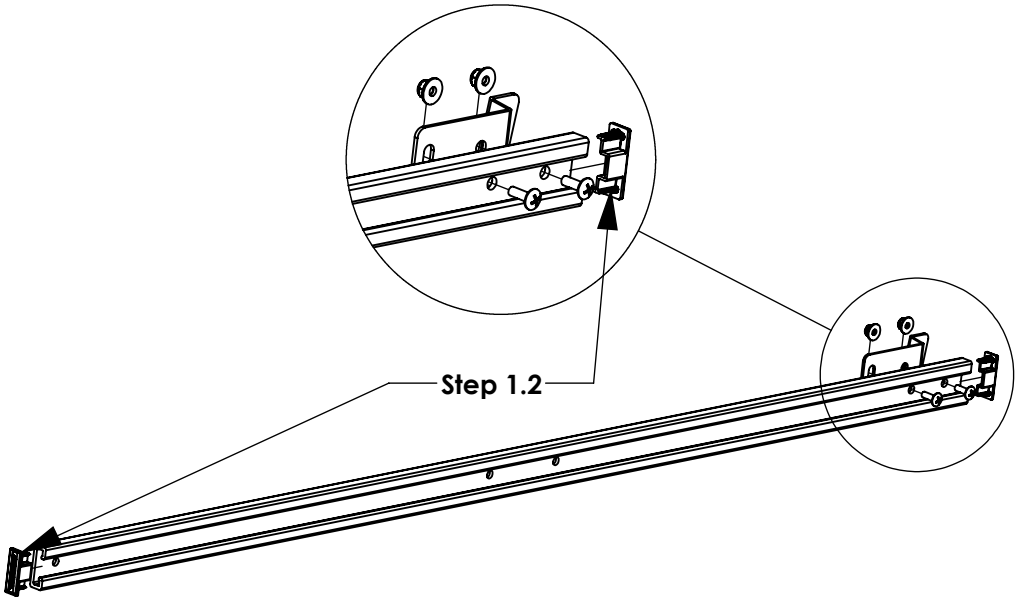

Step 2.1
DRILL THE OEM HOLE SHOWN TO 1/2 DIA HOLES

1/2 DRILL STEP BIT
1/2 DRILL STOP DRILL

Step 2.2
AFTER HOLES HAVE BEEN DRILLED PLACE FAS0091 INTO HOLES, USE PLUSNUT TOOL TO SECURE THEM

PLUSNUT TOOL

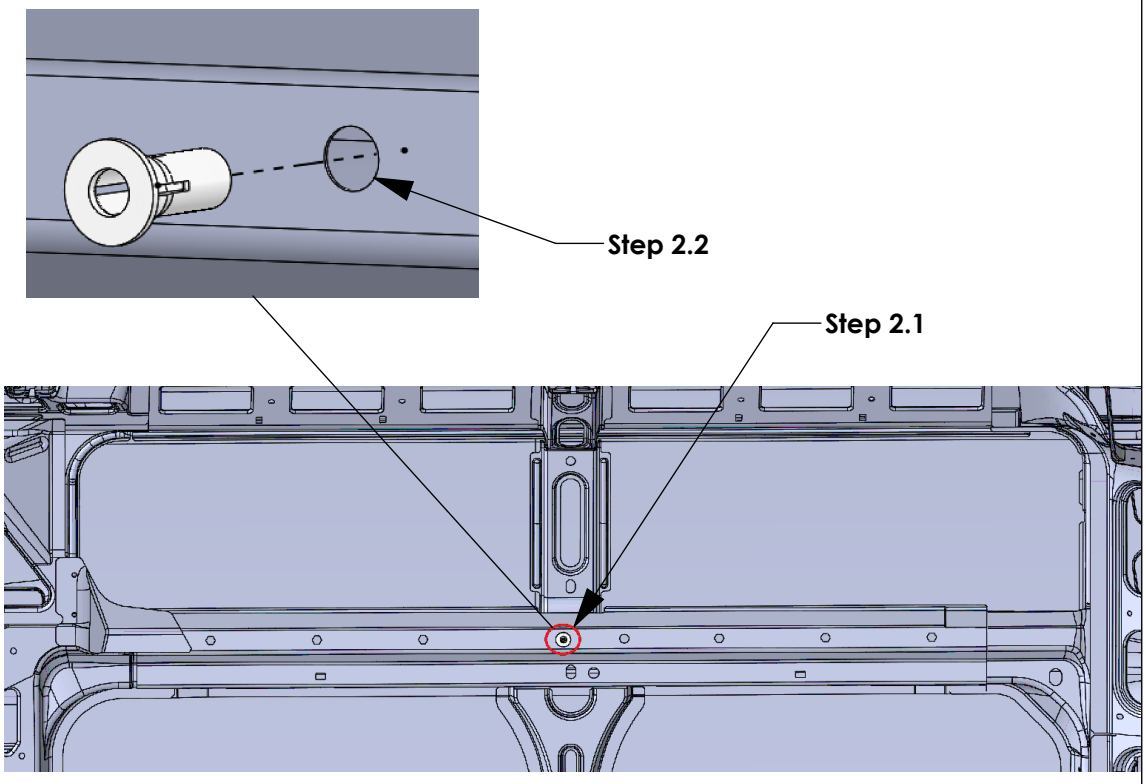

ARKPM136PS TO BE USED WITH PROMASTER HIGH ROOF 118WB

Step 3.2
ALIGN BRACKET 45718 TO PLUSNUT, KEEP BRACKETS PARALLEL WITH FLOOR. FULLY TIGHTEN FAS0093, FAS0098, & FAS0086 TO SECURE TO WALL. LOOSELY TIGHTEN BRACKET UNTIL STEP 5.1

1/2 SOCKET DRILL

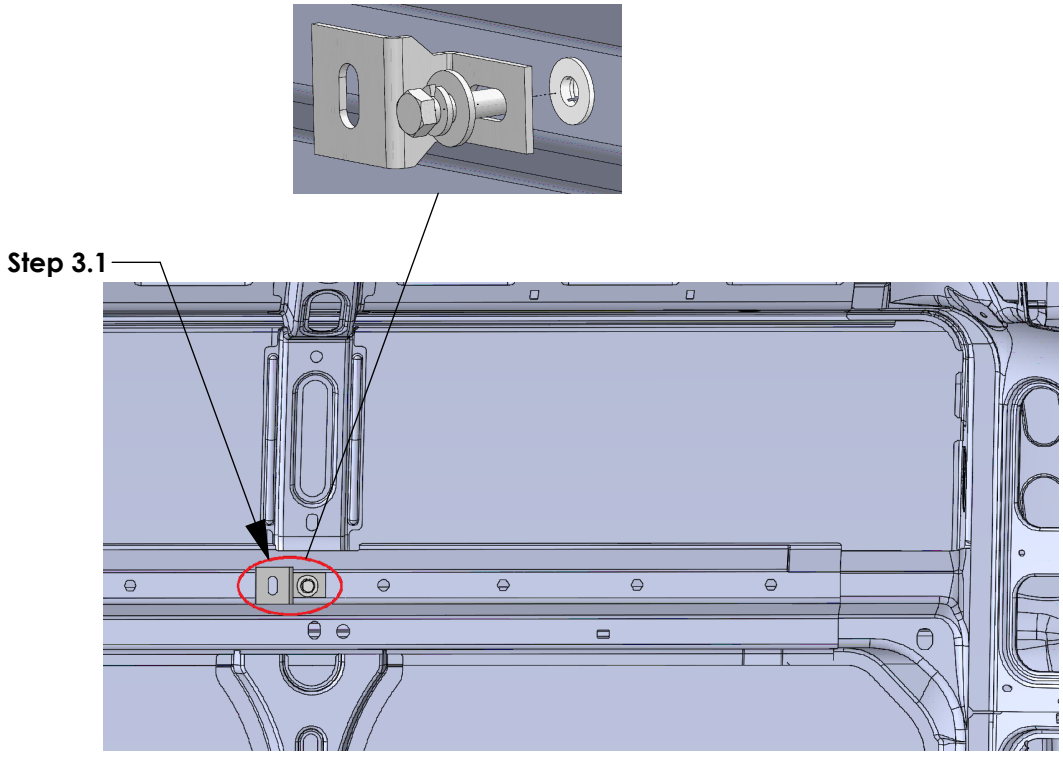

Step 4.1
PLACE ASSEMBLED RAIL (Step 1.1) AND ALIGN HOLES WITH INSTALLED BRACKET. KEEP RAIL PARALLED WITH FLOOR. MARK HOLE SHOWN TO DRILL 1/2 DIA HOLES

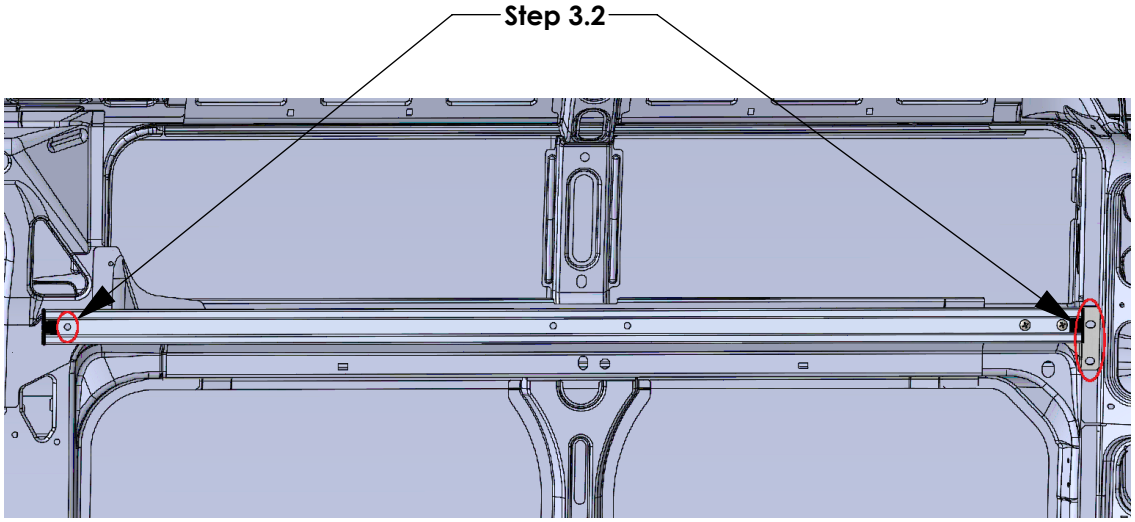

ARKPM136PS TO BE USED WITH PROMASTER HIGH ROOF 118WB

Step 4.2
AFTER HOLES HAVE BEEN DRILLED PLACE FAS0091 INTO HOLES, USE PLUSNUT TOOL TO SECURE THEM

PLUSNUT TOOL

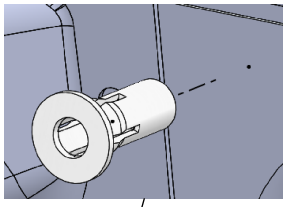

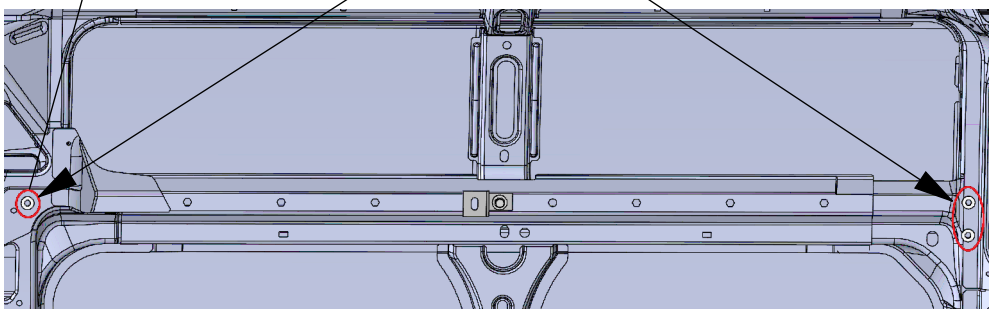

Step 5.1
PLACE ASSEMBLED RAIL BACK INTO PLACE LINING UP WITH BRACKETS. FULLY TIGHTEN FAS0062 & FAS0055 TO MOUNT TO BRACKETS

PHILPS HEAD SCREWDRIVER
7/16 WRENCH

Step 5.2
FULLY TIGHTEN FAS0708 & FAS0085 INTO C-PILLAR MOUNTING HOLE

5/16 ALLEN

Step 5.3
FULLY TIGHTEN FAS0093, FAS0098, & FAS0086 INTO BRACKET 45715-G

1/2 SOCKET
DRILL

