RAIL KIT, GM 135

PRODUCT WEIGHT

21.97 LBS

VEHICLE

GM Express / GMC Savana 135" wheel base

CAPACITY

N/A

COLOR

GRAY

CATALOG NUMBER

ARKGM135



PRODUCT FEATURES

This product is design for installation in the GM Express / GMC Savana 135" wheel base. It is optimized for use with the next generation shelving. The rail kit includes brackets that span the window cavities to support the AD mounting rail.

This unit will arrive in two boxes, one for the driver side, and one for the passenger side.

SEE PAGE 2 FOR APPLICATION NOTES, ACCESSORIES AND OTHER PRODUCTS THAT WORK WITH THIS UNIT.

RAIL KIT, GM 135

CATALOG NUMBER **ARKGM135**

PRODUCT APPLICATION

This product is design for installation in the GM Express / GMC Savana 135" wheel base. Optimized for use with the next generation shelving.

All next generatioin shelving kits for express / savana vans. See online fitment guide for full list of shelving units.

ACCESSORIES THAT WILL WORK WITH THIS PRODUCT

CATALOG NUMBER	*DESCRIPTION (smart)*
TDK	TIE DOWN SYSTEM (1)

The information contained in this document is the sole property of ADRIAN STEEL COMPANY. ADRIAN STEEL COMPANY retains the right to modify and/or change the product of its design at any time with prior notification.

RAIL KIT, GM 135, DS

PRODUCT WEIGHT

13.36 LBS

VEHICLE

GM Express / GMC Savana 135" wheel base

CAPACITY

N/A

COLOR

GRAY

CATALOG NUMBER

ARKGM135DS

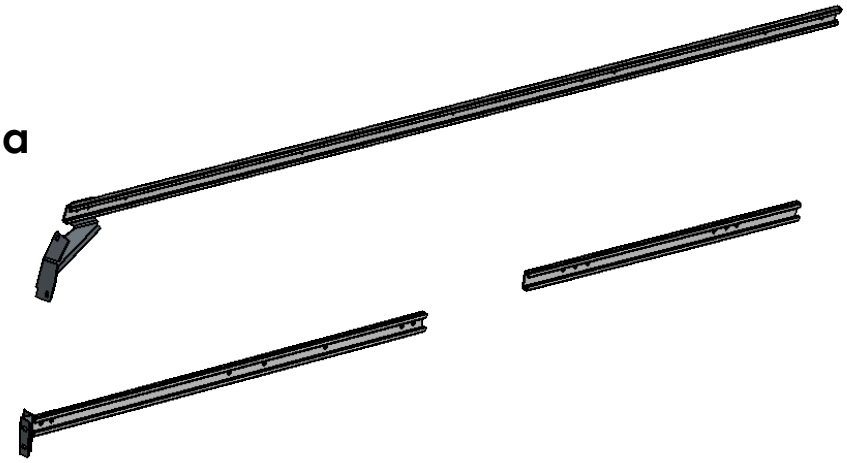

PRODUCT FEATURES

This product is design for installation in the GM Express / GMC Savana 135" wheel base. It is optimized for use with the next generation shelving. The rail kit includes brackets that span the window cavities to support the AD mounting rail.

SEE PAGE 2 FOR APPLICATION NOTES, ACCESSORIES AND OTHER PRODUCTS THAT WORK WITH THIS UNIT.

RAIL KIT, GM 135, DS

CATALOG NUMBER **ARKGM135DS**

PRODUCT APPLICATION

This product is design for installation in the GM Express / GMC Savana 135" wheel base. Optimized for use with the Next Generation Shelving.

All next generation shelving kits for Express / Savana vans. See online fitment guide for full list of shelving units.

ACCESSORIES THAT WILL WORK WITH THIS PRODUCT

CATALOG NUMBER	*DESCRIPTION (smart)*
TDK	TIE DOWN SYSTEM (1)

The information contained in this document is the sole property of ADRIAN STEEL COMPANY. ADRIAN STEEL COMPANY retains the right to modify and/or change the product of its design at any time with prior notification.

INSTR. NUMBER	PG:	REV:
INSARKGM135	1	C

PART NUMBER
- ARKGM135DS
- ARKGM135PS

PART DESC.
- RAIL KIT,GM 135,DS
- RAIL KIT,GM 135,PS

ITEM NO.	PART NUMBER	DESCRIPTION	QTY.
1	36498-0	RAIL,102",STRSD,AD SERIES	1
2	75765-G	RAIL D-PILLR BKT,GM,DS,G	1
3	75769	RAIL AD,GM135 PS BELT	1
4	78345	RAIL AD, AEF6360, 52.875	1
5	78322-G	RAIL D-PILLR BELTLINE BKT ,GM,DS, GRAY	1

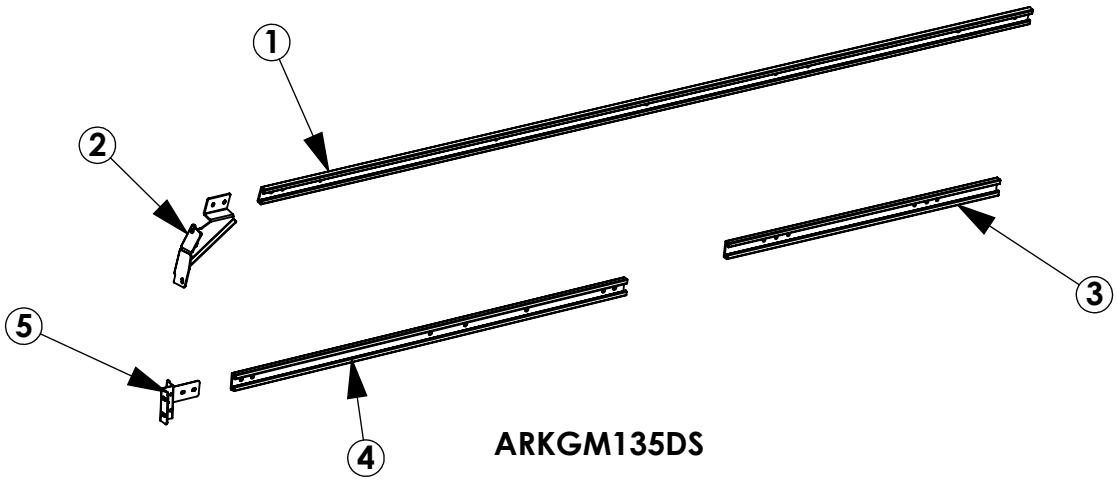

ARKGM135DS

ITEM NO.	PART NUMBER	DESCRIPTION	QTY.
1	36499-0	RAIL AD, AEF6360, 050.50	2
2	75764-G	RAIL D-PILLR BKT,GM,DS,G	1
3	78323-G	RAIL D-PILLAR BELTLINE BKT, GM, PS, GRAY	1
4	78321-G	RAIL FRONT BRKT LRG,GM,PS,G	2

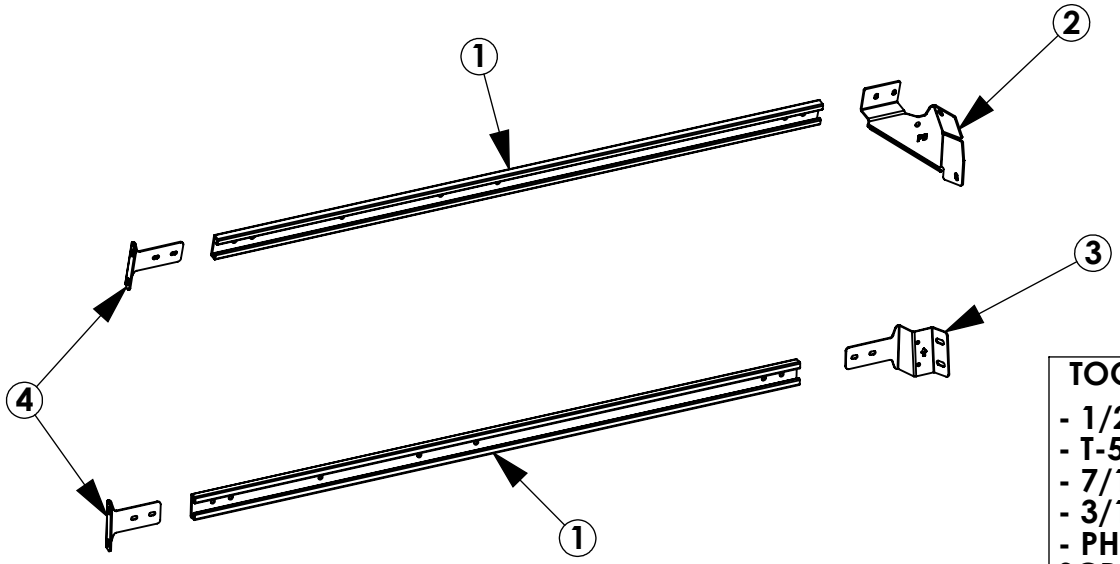

ARKGM135PS

TOOLS NEEDED:

- 1/2 SOCKET
- T-55 TORQUE BIT
- 7/16 WRENCH
- 3/16 ALLEN
- PHILIP HEAD SCREWDRIVER
- PLUSNUT TOOL
- 1/2 DRILL STEP BIT
- 1/2 DRILL STOP
- DRILL

BEST PRACTICES

GET TO KNOW THE VEHICLE - AT THE BEGINNING OF ANY INSTALLATION, CHECK THE LOCATION OF THE FUEL TANK, FUEL LINES, BRAKE LINES, HIGH VOLTAGE BATTERIES AND WIRING HARNESSES TO AVOID INJURY OR PROPERTY DAMAGE FROM TOOL CONTACT.

SEAL ALL EXTERIOR HOLES - ALL INSTALLATION HOLES SHOULD BE SEALED WITH BUTYL TAPE OR SILICON TO PREVENT WATER AND EXHAUST GASES FROM ENTERING THE VEHICLE.

CONTROL DRILL DEPTH - TO AVOID DAMAGE TO THE VEHICLE, USE A DRILL STOP OR CLEARED STEP BIT WHEN DRILLING INSTALLATION HOLES.

ALWAYS ADD PRIMER - WHEN ADDING INSTALLATION HOLES BE SURE TO USE A SELF-ETCHING PRIMER TO PREVENT CORROSION, FASTENER FAILURE AND INJURY.

MOUNTING POINTS MUST HAVE METAL-TO-METAL CONTACT - USE PROVIDED MOUNTING SPACERS TO ACCOMMODATE FOR VEHICLE FEATURES, CARPET OR SUBFLOORS.

PROVIDE CLEARANCE FOR SPACERS - IF THE INSTALLATION VEHICLE CONTAINS A CARPET OR SUBFLOOR, USE A 1-3/16" DIAMETER CARPET CUTTER (P/N: 31183-0) AT ALL MOUNTING LOCATIONS TO OPEN UP ROOM FOR SPACERS.

CHECK SPACER ORIENTATION - BE SURE THAT THE INDENT IN THE SPACER COVERS THE PLUSNUT HEAD; THIS ENSURES THE MOST METAL-TO-METAL CONTACT AND REDUCES VIBRATION.

PLUSNUT INSTALLATION - A PLUSNUT GUN IS RECOMMENDED FOR PLUSNUT INSTALLATION FOR ITS PRODUCTION SPEED. HOWEVER, A PLUSNUT SETTING TOOL CAN ALSO BE USED (P/N: 22200-0).

THRU-BOLT CLEARANCE - WHEN USING A THRU-BOLT AT ANY MOUNTING LOCATION, BE SURE THAT YOUR HOLE HAS 1/16" CLEARANCE.

BEST PRACTICE: ORGANIZE ALL FASTENERS & VERIFY THAT ALL ARE ACCOUNTED FOR

PAGE: **3**

FASTENERS USED

BAG REFERENCE: **BAGARKGM135DS**

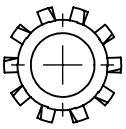

FAS0085
WASHER,LCK EXT,
5/16, ZP
QTY: 8

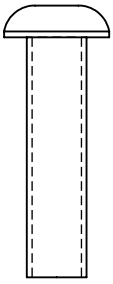

FAS0708
SCREW,BHCS,
5/16-18X1.25, ZN
QTY: 8

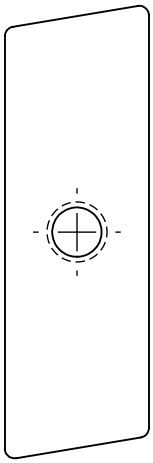

36503-0
RETAINER BAR,
5/16-18X2-3/8
QTY: 8

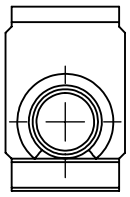

FAS0759
U-NUT,
5/16-18, ZP
QTY: 1

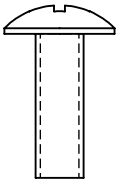

FAS0062
SCREW,THP,
1/4-20X.75, G5ZP
QTY: 4

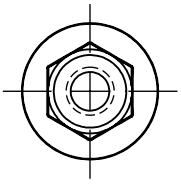

FAS0055
NUT,HEX NLK FLG,
1/4-20, ZP
QTY: 4

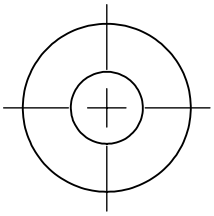

FAS0086
WASHER,FLAT USS,
5/16, ZP
QTY: 3

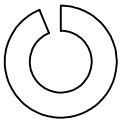

FAS0098
WASHER,LOCK,SPLIT,
5/16, ZP
QTY: 3

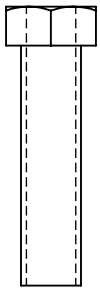

FAS0093
SCREW,HEX HD,
5/16-18X1.25
QTY: 3

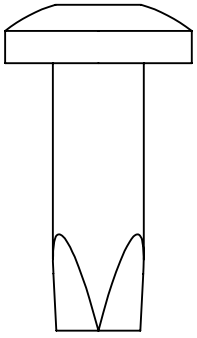

FAS0413
SCREW,PHT,
M12X36, ZP
QTY: 1

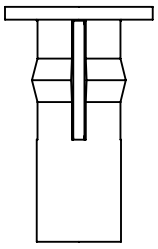

FAS0091
PLUSNUT, 5/16
QTY: 2

INTENTIONALLY LEFT BLANK

BEST PRACTICE: ORGANIZE ALL FASTENERS & VERIFY THAT ALL ARE ACCOUNTED FOR

PAGE: **5**

FASTENERS USED

BAG REFERENCE: **BAGARKGM135PS**

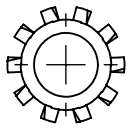

FAS0085
WASHER,LCK EXT,
5/16, ZP
QTY: 2

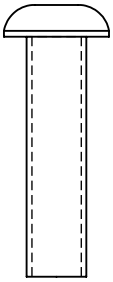

FAS0708
SCREW,BHCS,
5/16-18X1.25, ZN
QTY: 2

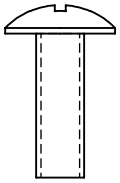

FAS0062
SCREW,THP,
1/4-20X.75, G5ZP
QTY: 8

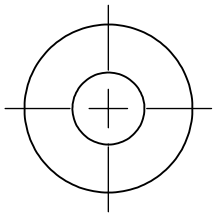

FAS0086
WASHER,FLAT USS,
5/16, ZP
QTY: 7

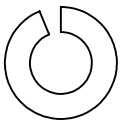

FAS0098
WASHER,LOCK,SPLIT,
5/16, ZP
QTY: 7

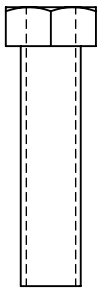

FAS0093
SCREW,HEX HD,
5/16-18X1.25
QTY: 7

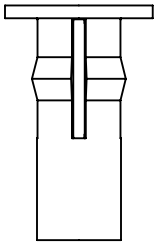

FAS0091
PLUSNUT, 5/16
QTY: 6

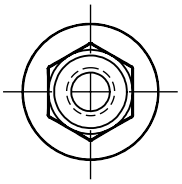

FAS0055
NUT,HEX NLK FLG,
1/4-20, ZP
QTY: 8

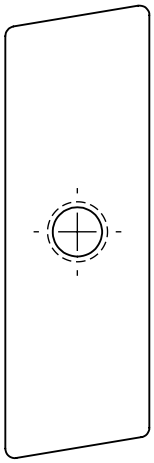

36503-0
RETAINER BAR,
5/16-18X2-3/8
QTY: 2

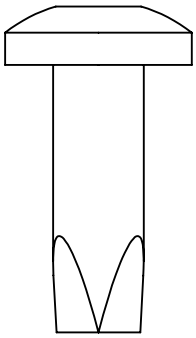

FAS0413
SCREW,PHT,
M12X36, ZP
QTY: 1

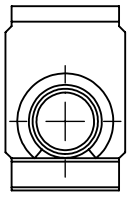

FAS0759
U-NUT,
5/16-18, ZP
QTY: 1

INTENTIONALLY LEFT BLANK

ARKGM135DS TO BE USED IN GM 135WB CARGO VAN

Step 1.1
FULLY TIGHTEN FAS0062 & FAS0055 TO SECURE BRACKET 78322-G TO RAIL 78345

PHILPS HEAD SCREWDRIVER
7/16 WRENCH

Step 1.2
PLACE 36496-0 AT ENDS OF RAIL

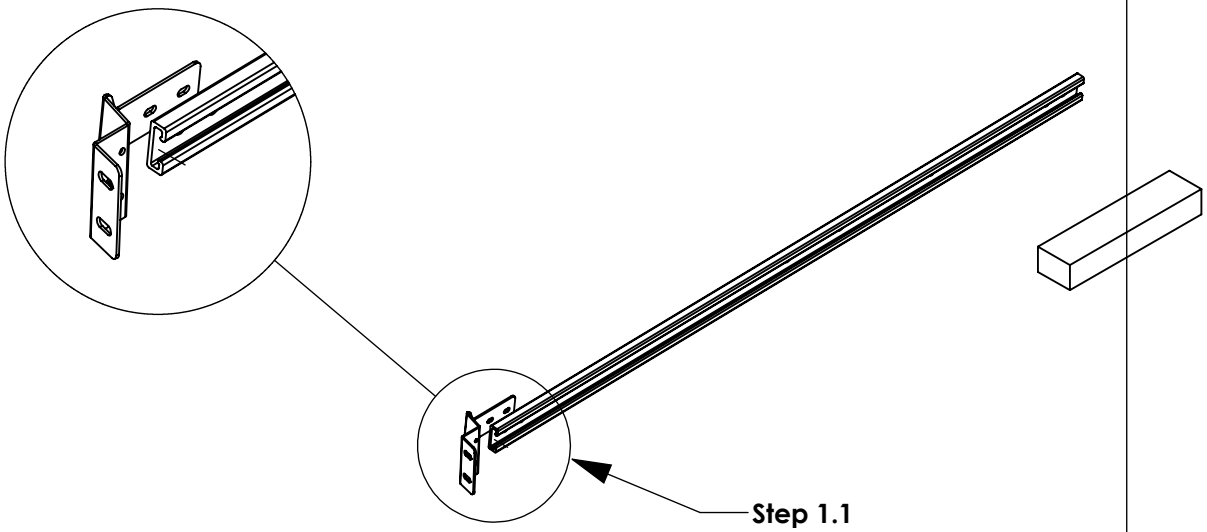

Step 2.1
PLACE BRACKET 75765-G AGAINST D-PILLAR, LOCATE OEM HOLE IN UPPER SECTION SHOWN. CENTER HOLE ON BRACKET.

Step 2.2
MARK CENTER OF SLOT ON D-PILLAR TO BE DRILLED

MARKER
1/2 DRILL STEP BIT
1/2 DRILL STOP DRILL

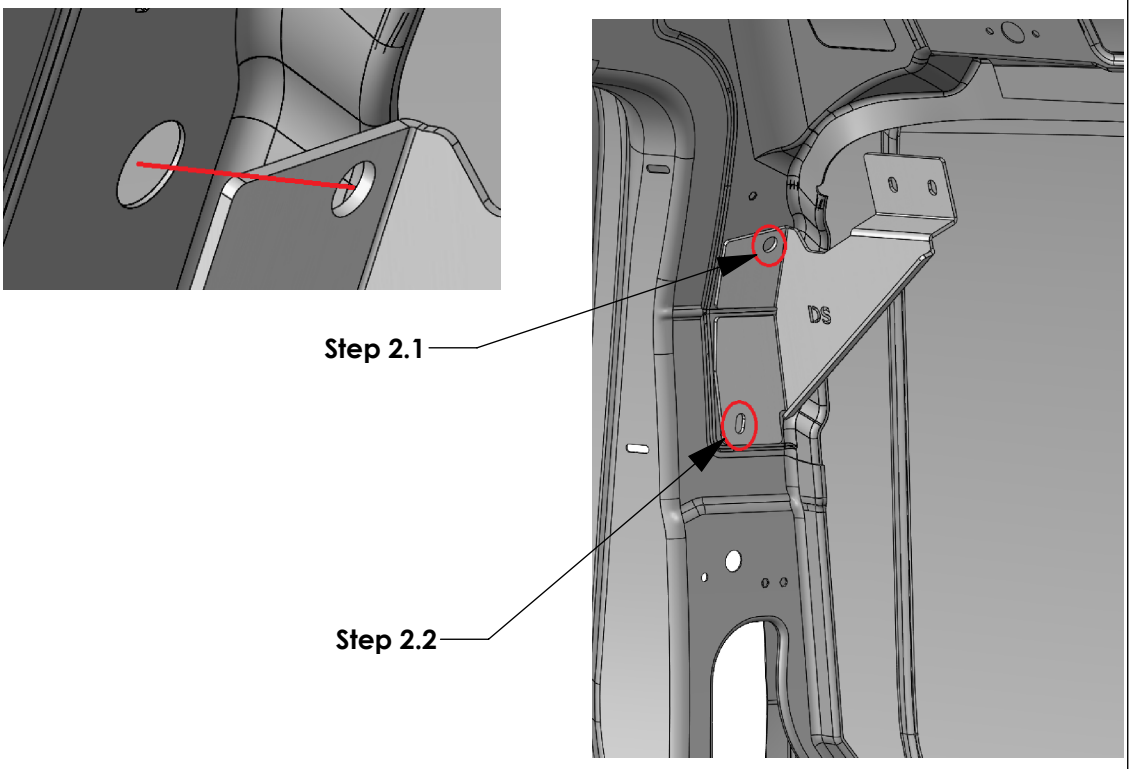

ARKGM135DS TO BE USED IN GM 135WB CARGO VAN

Step 2.3
PLACE ASSEMBLED RAIL AND BRACKET FROM Step 1.1 AND PLACE IT 44.88" FROM BEAR FLOOR. KEEP RAIL PARALLEL WITH FLOOR.

Step 2.4
PLACE BRACKET 75771-G w/ 75770 RAIL AT 23.81" FROM FLOOR AGAINST D-PILLAR AND MARK CENTER OF SLOTS ON BRACKET TO BE DRILLED TO 1/2 DIA HOLES

MARKER
1/2 DRILL STEP BIT
1/2 DRLL STOP DRILL

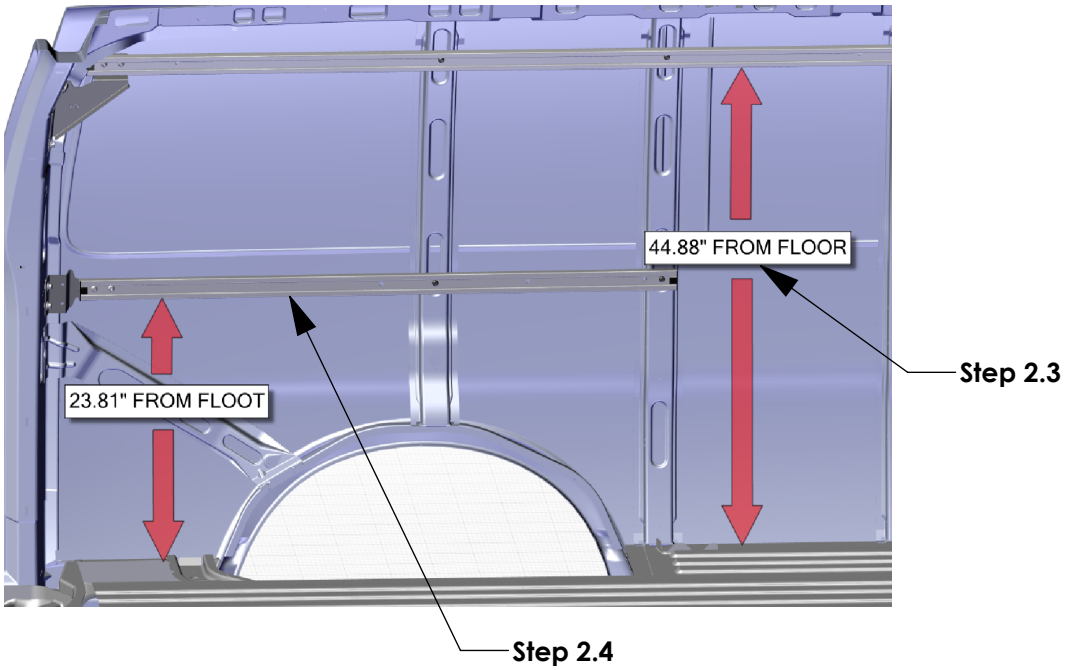

Step 3.1
PLACE FAS0759 IN CUTOUT AND ALINE WITH HOLE THAT WAS DRILLED

Step 3.2
PLACE FAS0091 INTO HOLES THAT WERE DRILL, USE PLUSNUT TOOL TO SECURE TO D-PILLAR

PLUSNUT TOOL

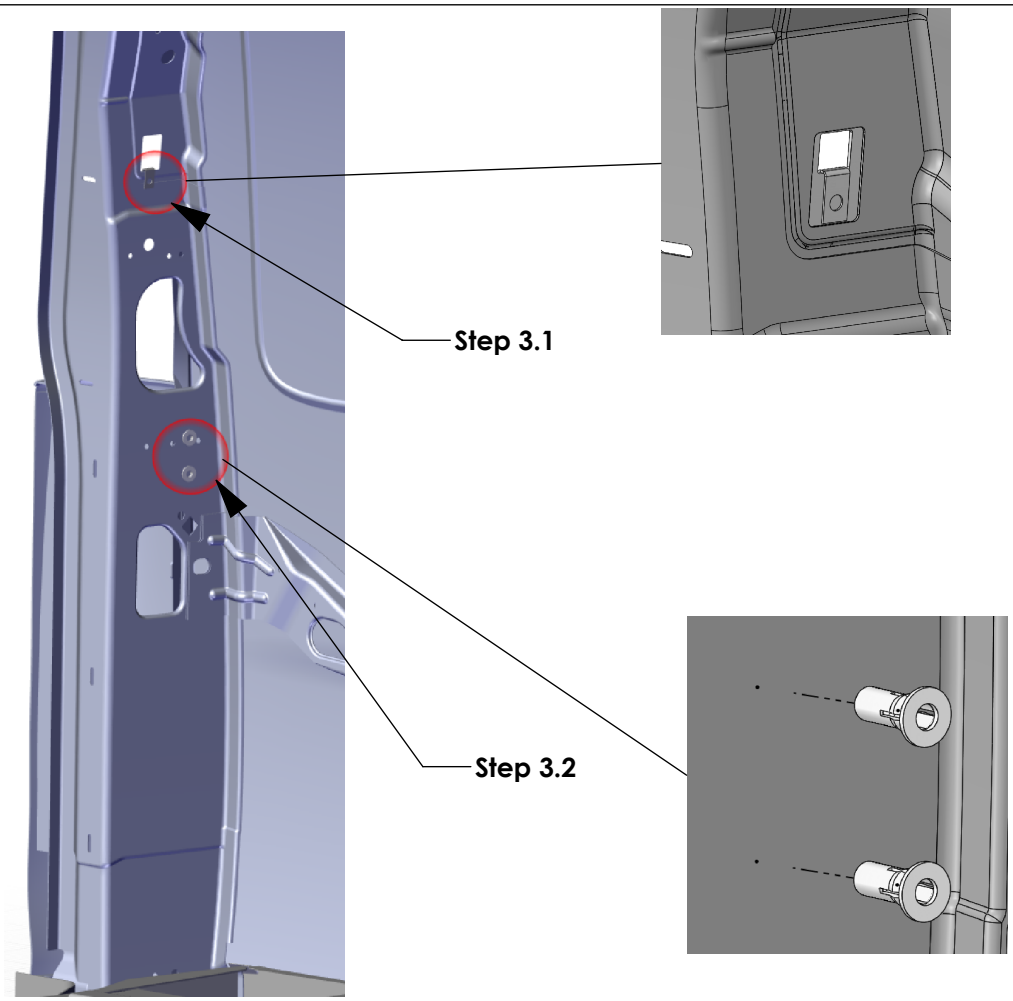

ARKGM135DS TO BE USED IN GM 135WB CARGO VAN

Step 4.1
PLACE 36496-0 AT ENDS OF RAILS

Step 4.2
FULLY TIGHTEN FAS0062 & FAS0055 TO BRACKET 75765-G AND 36498P RAIL

PHILPS HEAD SCREWDRIVER
7/16 WRENCH

Step 4.3
PREASSEMBLY FAS0708 & FAS0085 IN RAILS ALONG WITH 36503-0, KEEP FASTENERS LOOSE TILL FINAL ASSEMLBY

3/16 ALLEN

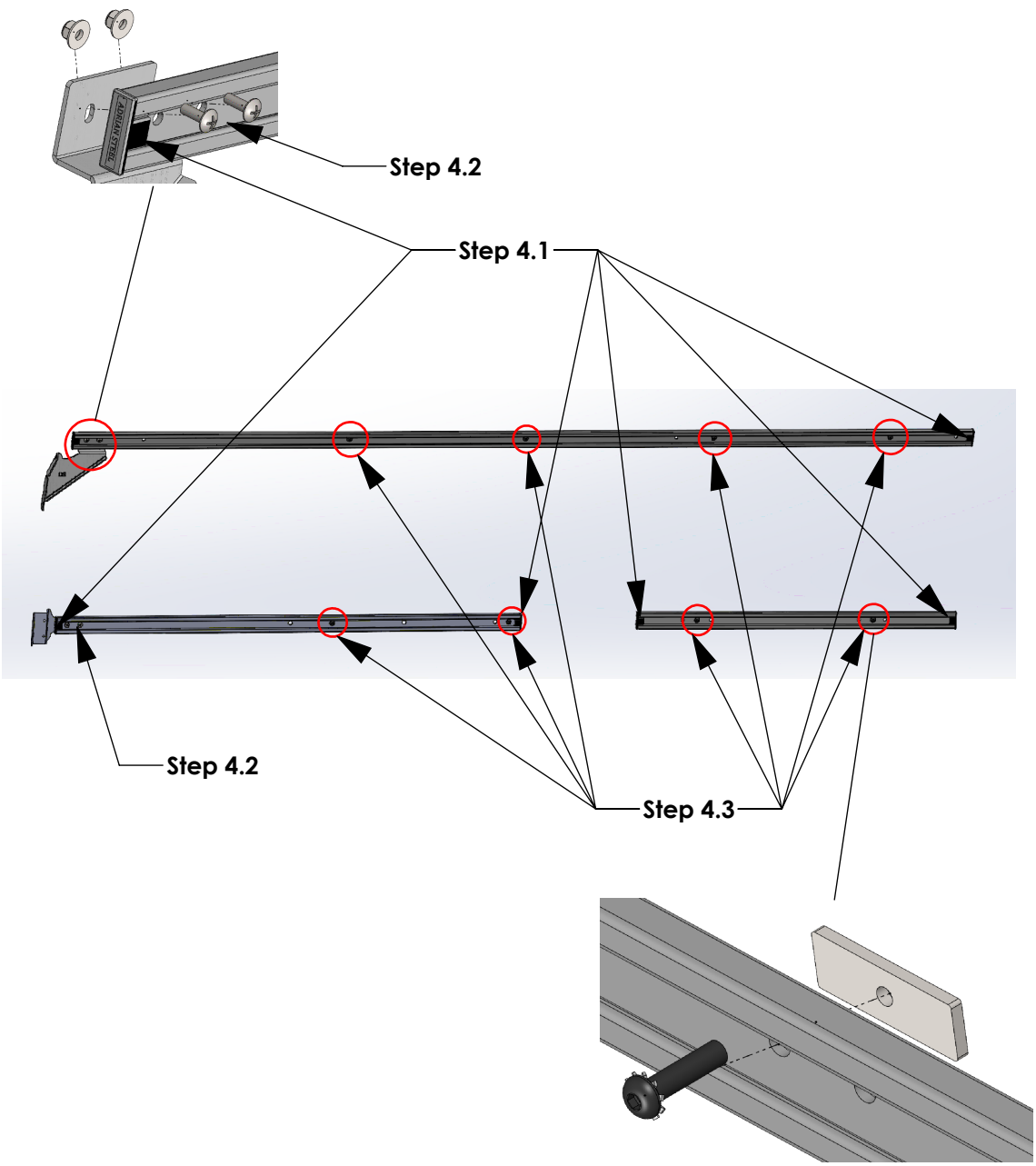

ARKGM135DS TO BE USED IN GM 135WB CARGO VAN

Step 5.1
PLACE RAILS AGAINST THE WALL AT THE HEIGHT LISTED, FULLY TIGHTEN WHEN IN PLACE. KEEP PARALLEL WITH FLOOR

44 7/8" TOP RAIL
24 7/8" MIDDLE RAIL
10 7/8" LOWER RAIL

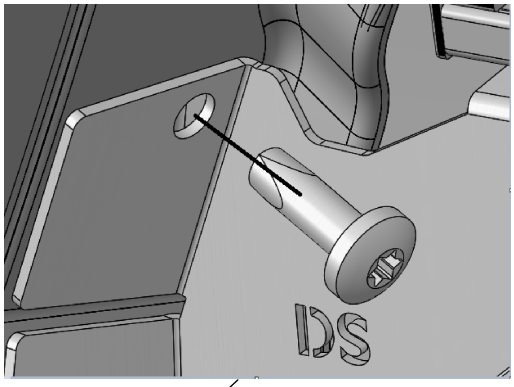

Step 5.2
FULLY TIGHTEN FAS0413 INTO HOLES

T-55 TORQUE BIT DRILL

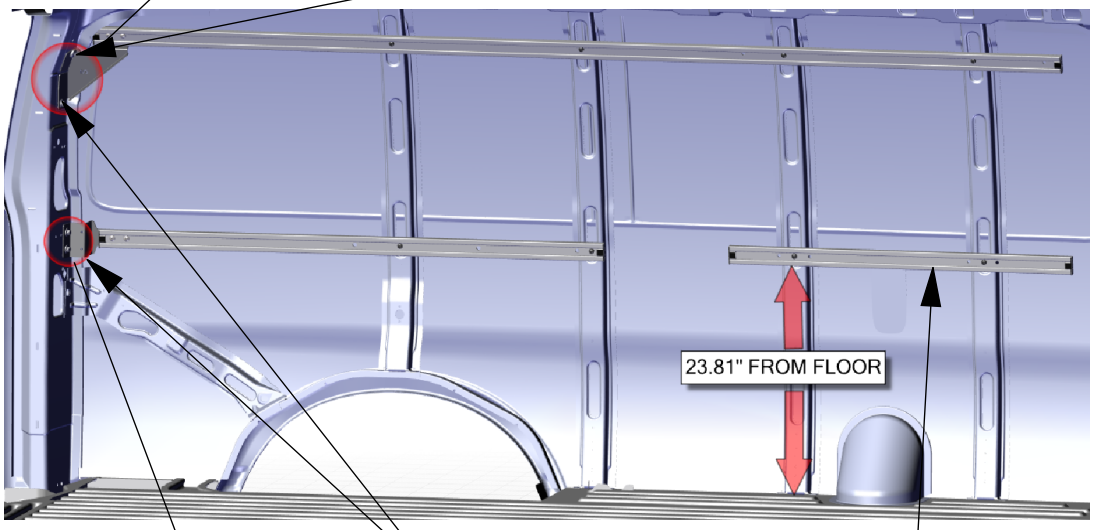

Step 5.3
FULLY TIGHTEN FAS0093, FAS0098, & FAS0086 TO BRACKETS ON D-PILLAR

1/2 SOCKET DRILL

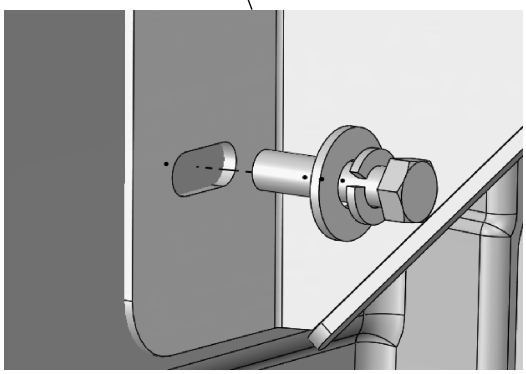

Step 5.4
PLACE 75769 RAIL AGAINST B & C PILLARS AT 23.81" HEIGHT FROM FLOOR, KEEP PARALLE WITH FLOOR. FULLY TIGHTEN WHEN IN PLACE

3/16 ALLEN

ARKGM135PS TO BE USED IN GM 135WB CARGO VAN

Step 1.1
PLACE 36496-0 AT ENDS OF RAIL

Step 1.2
FULLY TIGHTEN FAS0062 & FAS0055 TO SECURE BRACKETS 78323-G & 78321-G TO RAIL 78636

PHILPS HEAD SCREWDRIVER
7/16 WRENCH

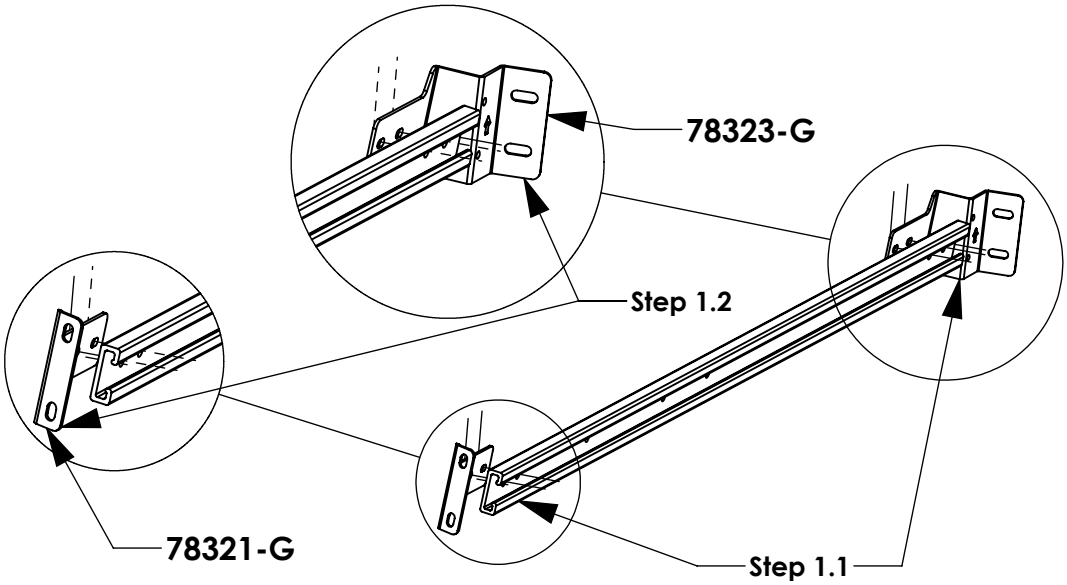

Step 2.1
PLACE BRACKET 75764-G AGAINST D-PILLAR, LOCATE OEM HOLE IN UPPER SECTION SHOWN. CENTER HOLE ON BRACKET.

Step 2.2
MARK CENTER OF SLOT ON D-PILLAR TO BE DRILLED

MARKER
1/2 DRILL STEP BIT
1/2 DRILL STOP DRILL

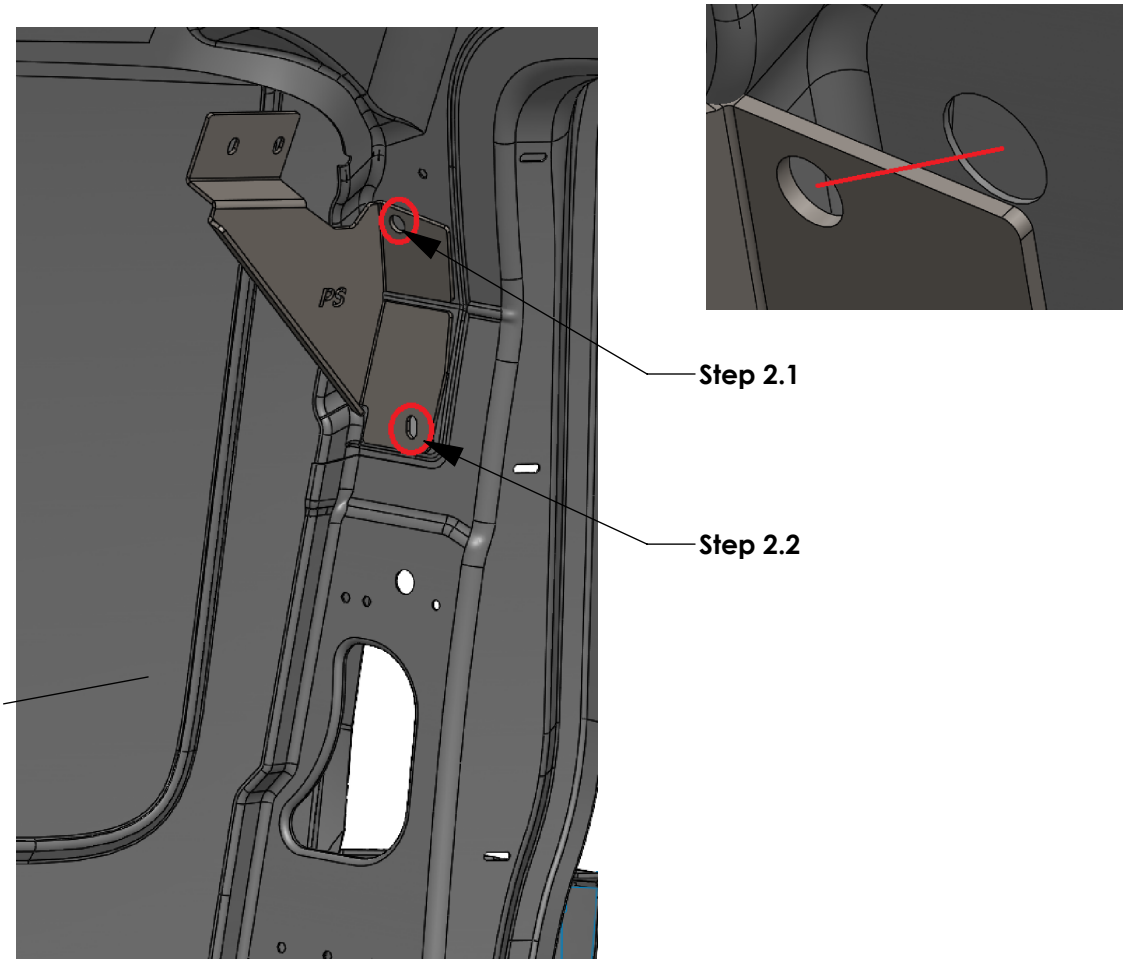

ARKGM135PS TO BE USED IN GM 135WB CARGO VAN

Step 2.3
PLACE ASSEMBLED RAIL AND BRACKET FROM Step 1.1 AND PLACE IT 23.62" FROM FLOOR. KEEP RAIL PARALLEL WITH FLOOR. MARK HOLES ON D & C PILLARS TO BE DRILL 1/2 DIA HOLES

MARKER
1/2 DRILL STEP BIT
1/2 DRLL STOP DRILL

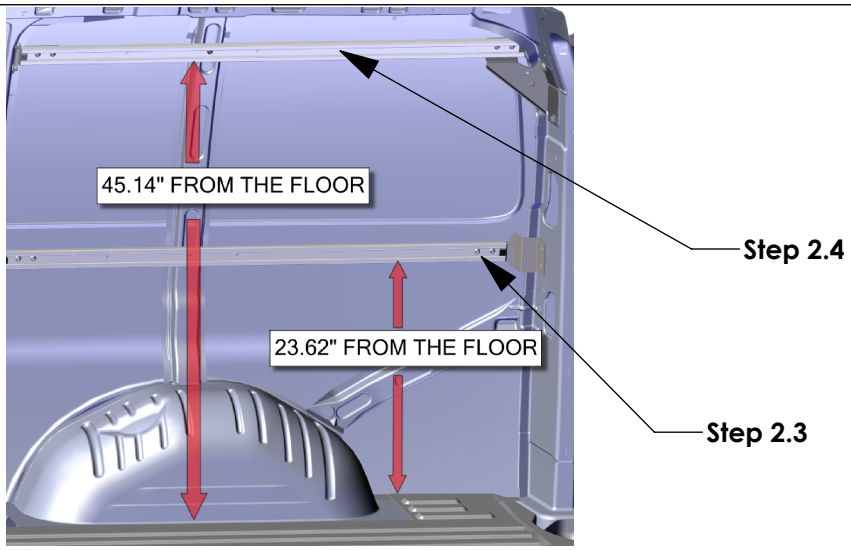

Step 2.4
PLACE BRACKET AGAINST C & D PILLARS AND MARK CENTER OF SLOTS ON BRACKET TO BE DRILLED TO 1/2 DIA HOLES

MARKER
1/2 DRILL STEP BIT
1/2 DRLL STOP DRILL

Step 3.1
PLACE FAS0758 IN CUTOUT AND ALINE WITH HOLE THAT WAS DRILLED

Step 3.2
PLACE FAS0091 INTO HOLES THAT WERE DRILL, USE PLUSNUT TOOL TO SECURE TO D-PILLAR

PLUSNUT TOOL

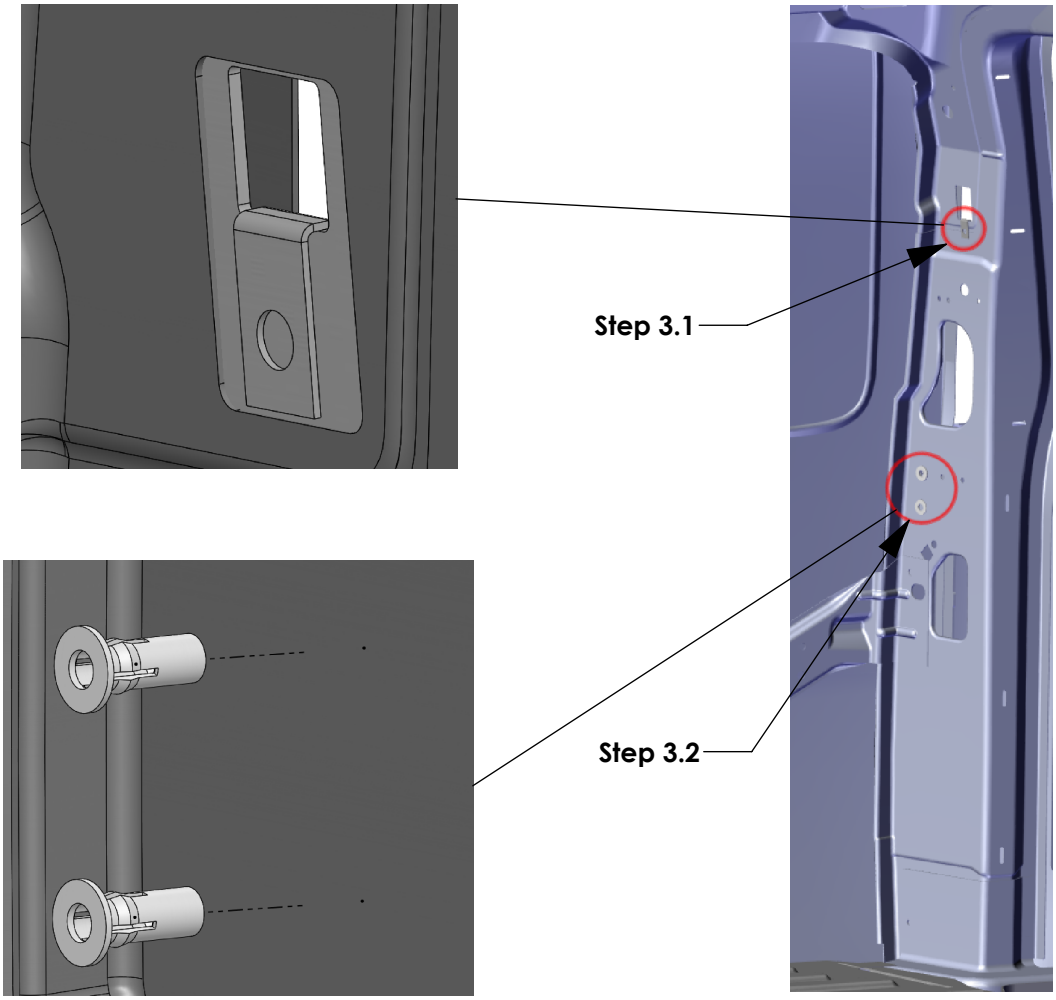

ARKGM135PS TO BE USED IN GM 135WB CARGO VAN

Step 3.3
PLACE FAS0091 INTO HOLES THAT WERE DRILL, USE PLUSNUT TOOL TO SECURE TO C-PILLAR

PLUSNUT TOOL

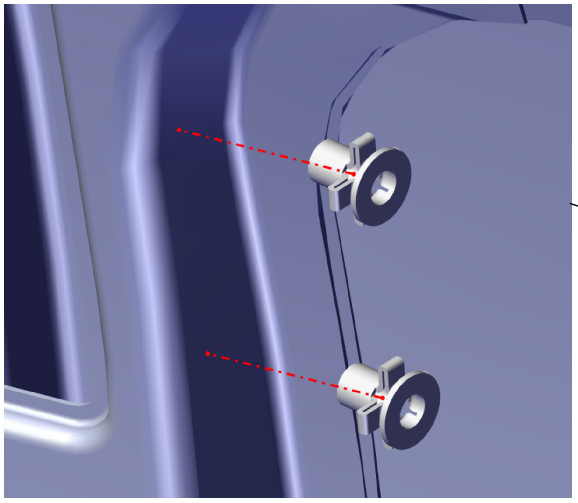

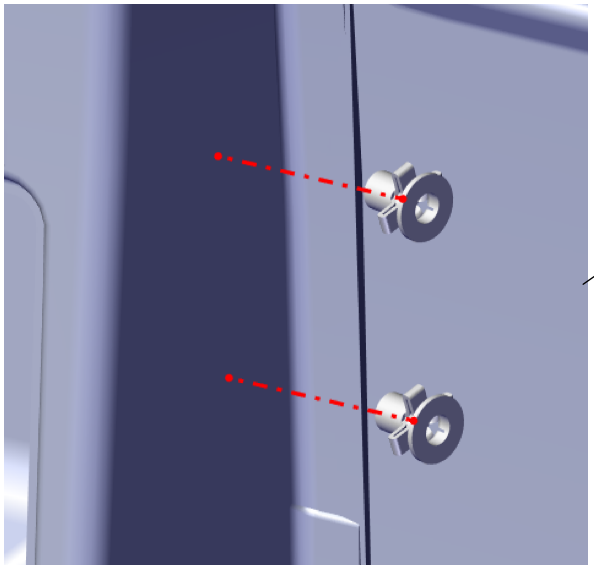

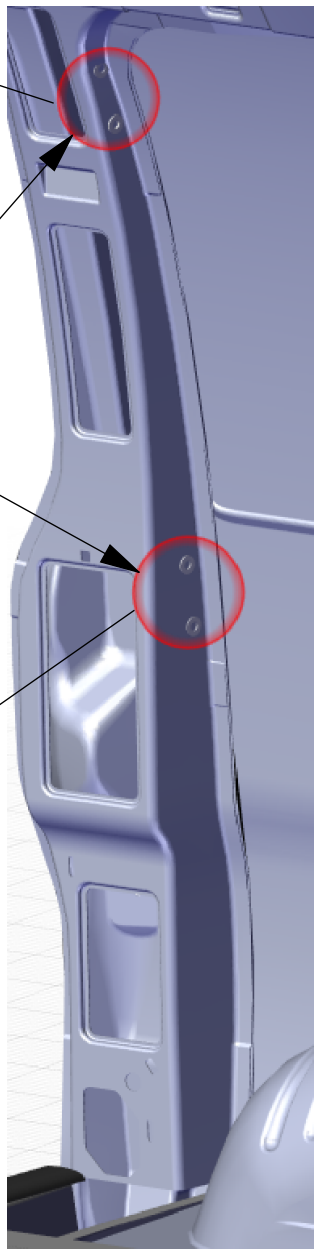

Step 3.1

ARKGM135PS TO BE USED IN GM 135WB CARGO VAN

Step 4.1
PLACE 36496-0 AT ENDS OF RAILS

Step 4.2
FULLY TIGHTEN FAS0062 & FAS0055 TO BRACKET 75764-G AND 36498P RAIL

PHILPS HEAD SCREWDRIVER
7/16 WRENCH

Step 4.3
PREASSEMBLY FAS0708 & FAS0085 IN RAILS ALONG WITH 36503-0, KEEP FASTENERS LOOSE TILL FINAL ASSEMLBY

3/16 ALLEN

Step 4.4
FULLY TIGHTEN FAS0062 & FAS0055 TO BRACKET 78321-G AND 78636 RAILS

PHILPS HEAD SCREWDRIVER
7/16 WRENCH

Step 4.5
FULLY TIGHTEN FAS0062 & FAS0055 TO BRACKET 78321-G AND 78636 RAILS

PHILPS HEAD SCREWDRIVER
7/16 WRENCH

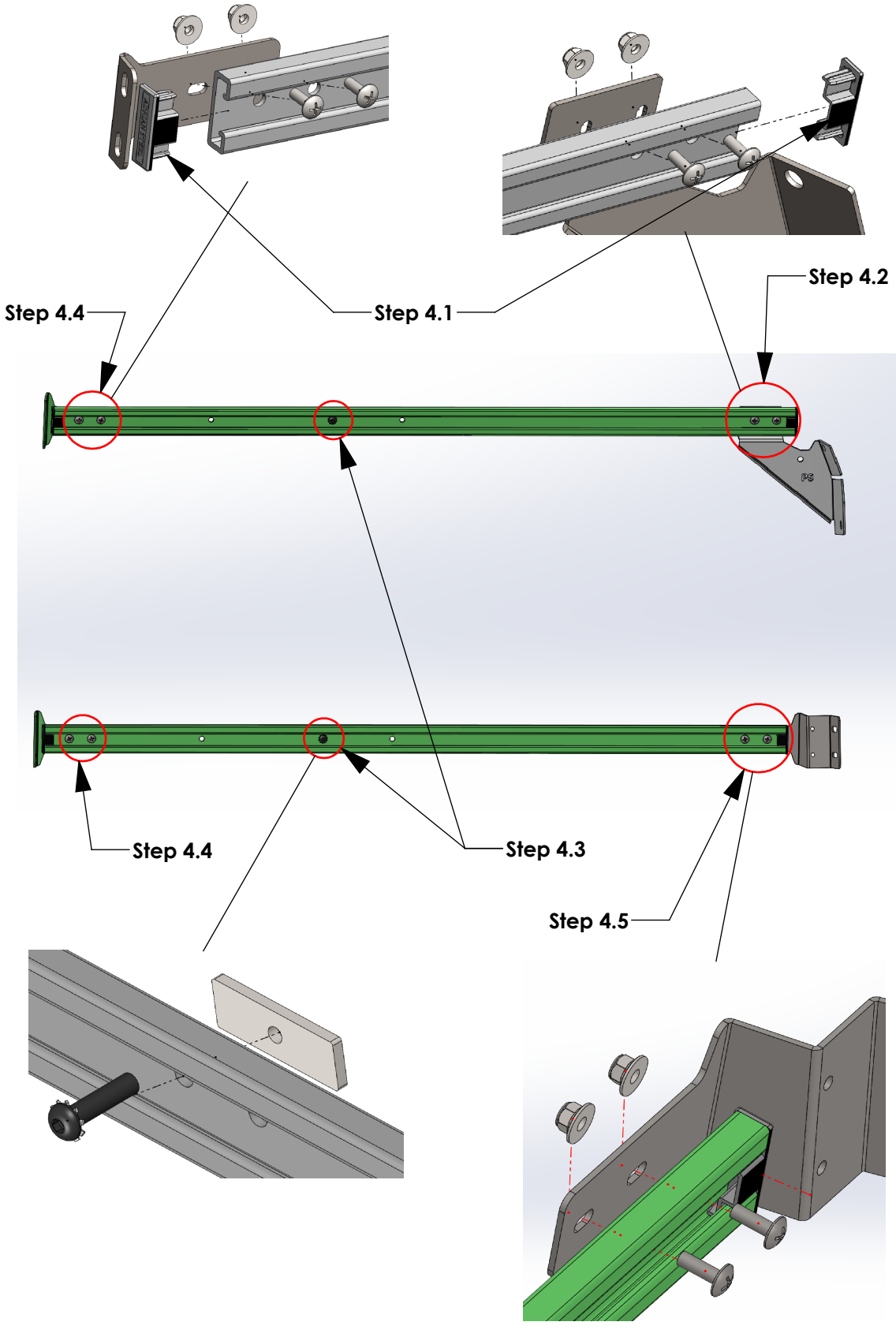

ARKGM135PS TO BE USED IN GM 135WB CARGO VAN

Step 5.1
PLACE RAILS AGAINST THE WALL AT THE HEIGHT LISTED, FULLY TIGHTEN WHEN IN PLACE. KEEP PARALLEL WITH FLOOR

45.14" TOP RAIL
23.62" LOWER RAIL

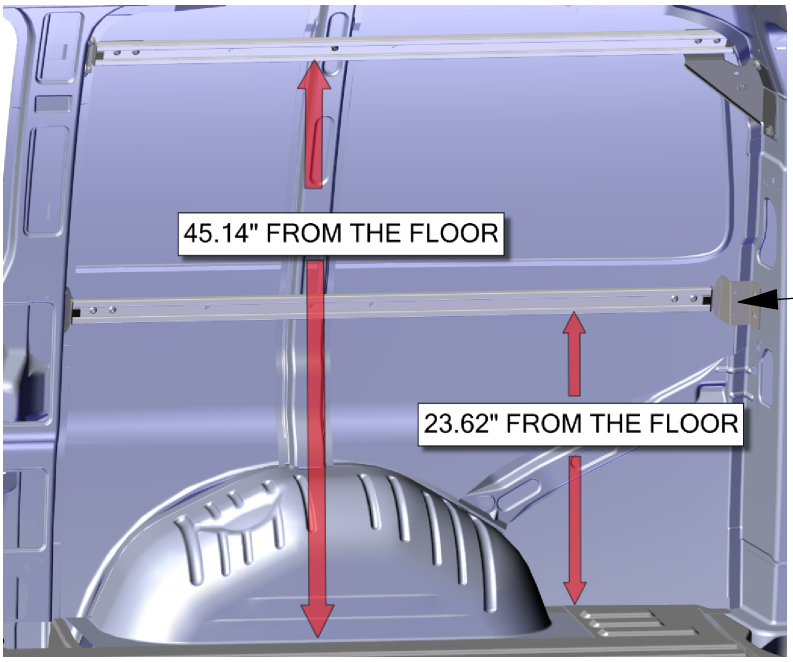

Step 5.2
FULLY TIGHTEN FAS0413 INTO HOLES

T-55 TORQUE BIT DRILL

Step 5.3
FULLY TIGHTEN FAS0093, FAS0098, & FAS0086 TO BRACKETS ON D-PILLAR

1/2 SOCKET DRILL

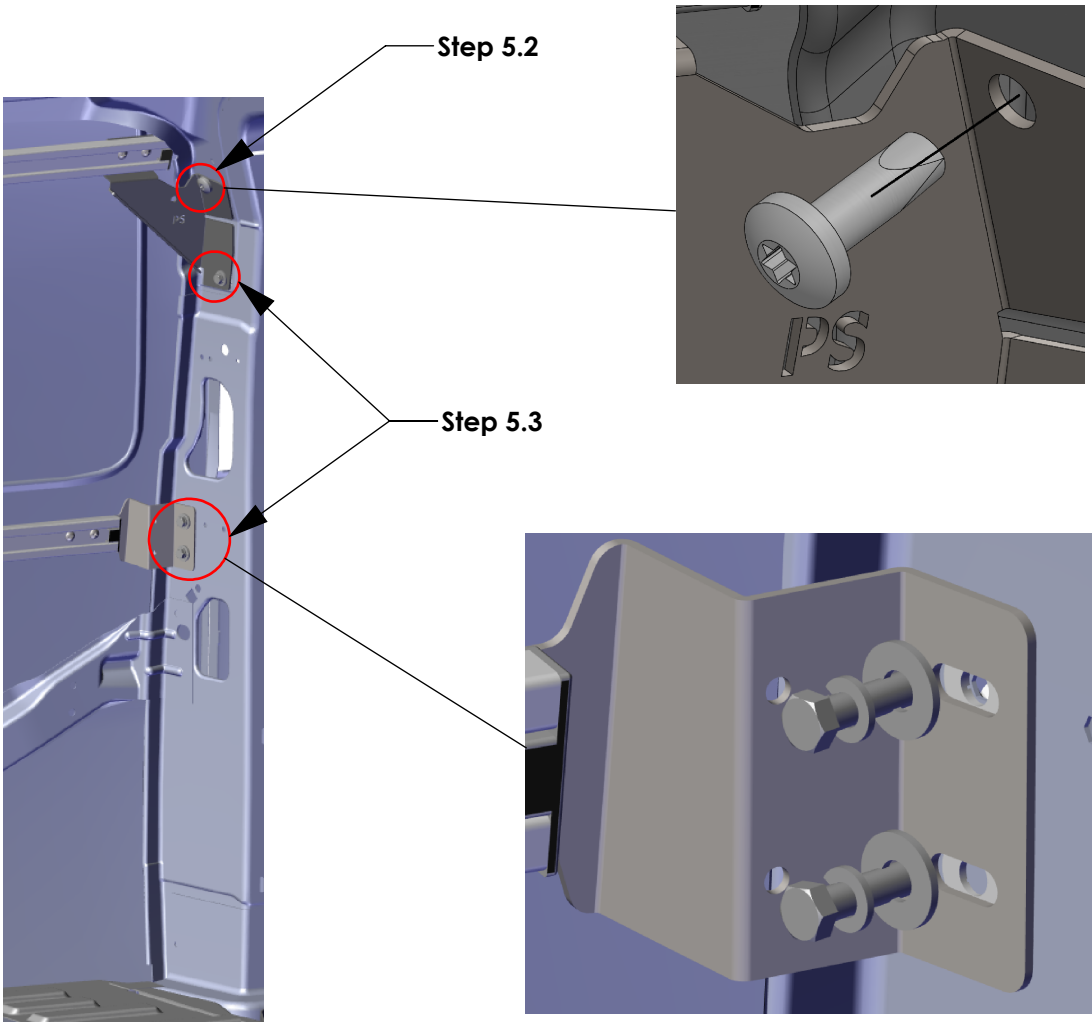

ARKGM135PS TO BE USED IN GM 135WB CARGO VAN

Step 5.4
FULLY TIGHTEN FAS0093, FAS0098, & FAS0086 TO BRACKETS ON C-PILLAR

1/2 SOCKET DRILL

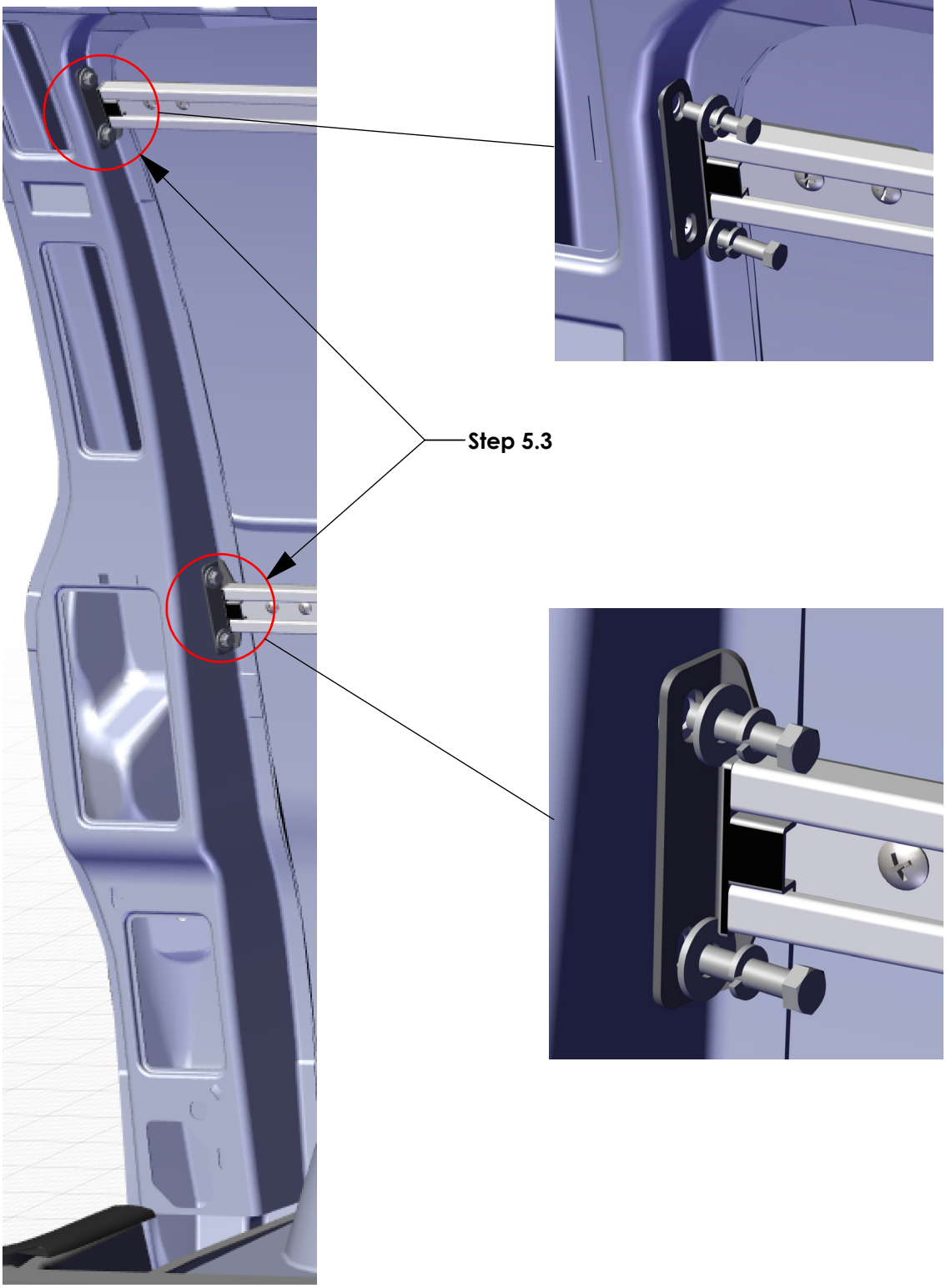

RAIL KIT, GM 135, PS

PRODUCT WEIGHT

9.28 LBS

VEHICLE

GM Express / GMC Savana 135" wheel base

CAPACITY

N/A

COLOR

GRAY

CATALOG NUMBER

ARKGM135PS

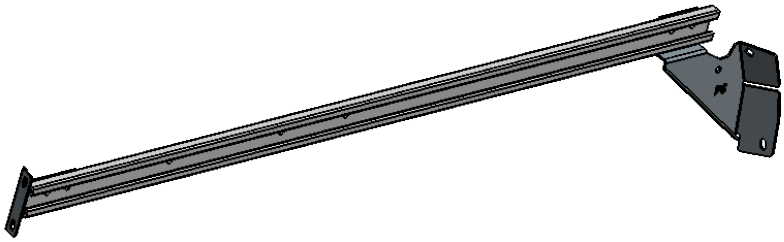

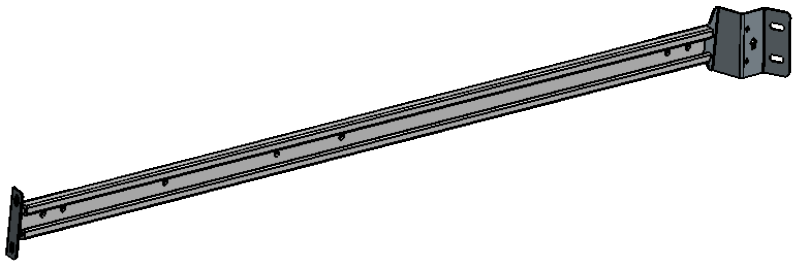

PRODUCT FEATURES

This product is design for installation in the GM Express / GMC Savana 135" wheel base. It is optimized for use with the next generation shelving. The rail kit includes brackets that span the window cavities to support the AD mounting rail.

SEE PAGE 2 FOR APPLICATION NOTES, ACCESSORIES AND OTHER PRODUCTS THAT WORK WITH THIS UNIT.

RAIL KIT, GM 135, PS

CATALOG NUMBER **ARKGM135PS**

PRODUCT APPLICATION

This product is design for installation in the GM Express / GMC Sierra 135" wheel base. Optimized for use with the Next Generation Shelving.

All next generation shleving kits for express / savana vans. See online fitment guide for full list of shelving units.

ACCESSORIES THAT WILL WORK WITH THIS PRODUCT

CATALOG NUMBER	*DESCRIPTION (smart)*
TDK	TIE DOWN SYSTEM (1)

The information contained in this document is the sole property of ADRIAN STEEL COMPANY. ADRIAN STEEL COMPANY retains the right to modify and/or change the product of its design at any time with prior notification.