ADRIAN STEEL
Cargo Management Solutions for Commercial Vehicles

DRAWER UNIT, 14X24, A, 3, C

PRODUCT WEIGHT

37.67 LBS

WIDTH X DEPTH X HEIGHT

24" X 14" X 11.5"

CAPACITY

15LBS. PER SHALLOW DRAWER
25LBS. PER DEEP DRAWER

COLOR

ASC BLUE & GRAY

CATALOG NUMBER

ADUK1424A3C

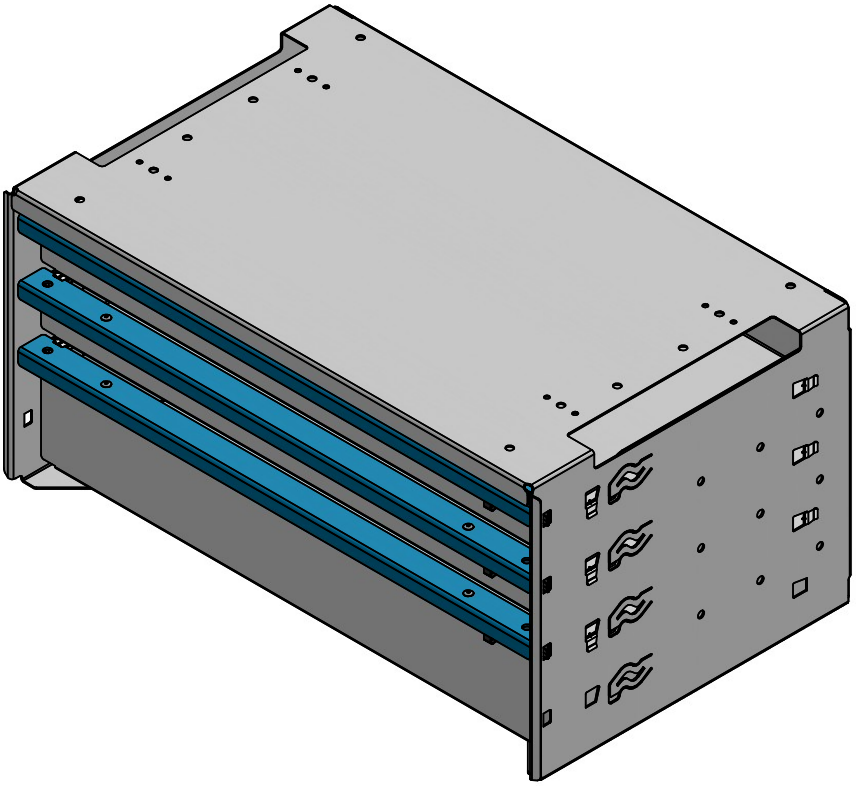

PRODUCT FEATURES

SEE PAGE 2 FOR APPLICATION NOTES, ACCESSORIES AND OTHER PRODUCTS THAT WORK WITH THIS UNIT.

ADRIAN STEEL
Cargo Management Solutions for Commercial Vehicles

DRAWER UNIT, 14X24, A, 3, C

CATALOG NUMBER **ADUK1424A3C**

PRODUCT APPLICATION

This unit is designed to be installed on Adrian Shelving with the use of the included riser kit or by stacking with other units and mounting directly to vehicle (not included).

NOTE: * - XX = WIDTH, # = NUMBER OF SHELVES
(EXAMPLE - ASFK2T1424G4)

ACCESSORIES THAT WILL WORK WITH THIS PRODUCT

CATALOG NUMBER	DESCRIPTION (smart)
ADURK24	DRAWER UNIT, RISER KIT, 24
ADUK14242T	DRAWER UNIT, 14X24, A, 2, T
ADUK14244S	DRAWER UNIT, 14X24, A, 4, S
*ASFK2T14XXG#	NEXT GENERATION SHELVING KIT

The information contained in this document is the sole property of ADRIAN STEEL COMPANY. ADRIAN STEEL COMPANY retains the right to modify and/or change the product of its design at any time with prior notification.

THIS INSTRUCTION IS TO DEMONSTRATE THE ASSEMBLY AND INSTALLATION OF THE

ADRIAN SHELVING DRAWER UNIT PRODUCT LINE

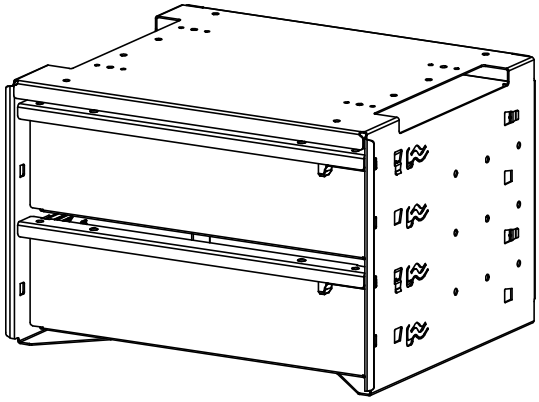

ADUA1418A2T
ADUA1424A2T
ADUA1618A2T
ADUA1624A2T

ADURK18G

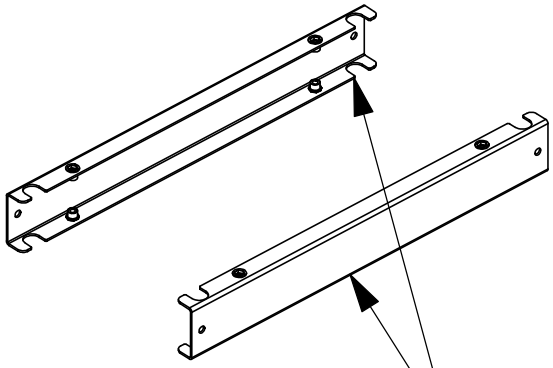

ADUR18-G

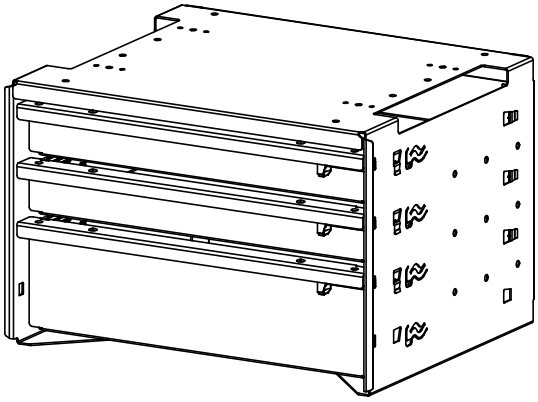

ADUA1418A3C
ADUA1424A3C
ADUA1618A3C
ADUA1624A3C

ADURK24G

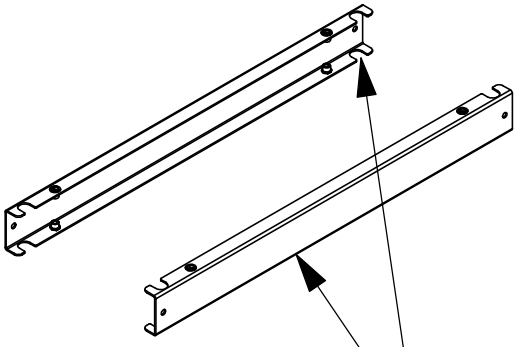

ADUR24-G

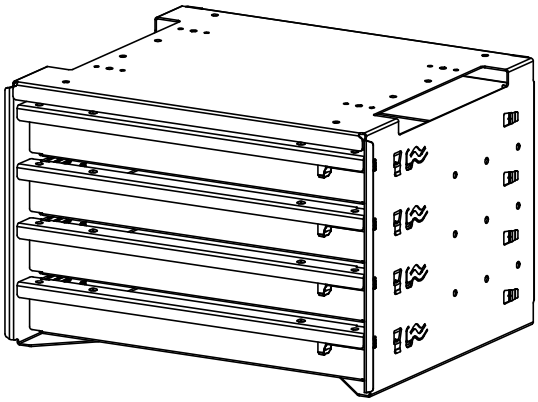

ADUA1418A4S
ADUA1424A4S
ADUA1618A4S
ADUA1624A4S

TOOLS NEEDED:

- IMPACT
- DRILL
- RIVET TOOL
- 7/16" SOCKET
- 7/16" WRENCH
- #3 PHILLIPS DRIVER
- 9/32" OR "K" DRILL BIT

BEST PRACTICES

GET TO KNOW THE VEHICLE - AT THE BEGINNING OF ANY INSTALLATION, CHECK THE LOCATION OF THE FUEL TANK, FUEL LINES, BRAKE LINES, HIGH VOLTAGE BATTERIES AND WIRING HARNESSES TO AVOID INJURY OR PROPERTY DAMAGE FROM TOOL CONTACT.

SEAL ALL EXTERIOR HOLES - ALL INSTALLATION HOLES SHOULD BE SEALED WITH BUTYL TAPE OR SILICON TO PREVENT WATER AND EXHAUST GASES FROM ENTERING THE VEHICLE.

CONTROL DRILL DEPTH - TO AVOID DAMAGE TO THE VEHICLE, USE A DRILL STOP OR CLEARED STEP BIT WHEN DRILLING INSTALLATION HOLES.

ALWAYS ADD PRIMER - WHEN ADDING INSTALLATION HOLES BE SURE TO USE A SELF-ETCHING PRIMER TO PREVENT CORROSION, FASTENER FAILURE AND INJURY.

MOUNTING POINTS MUST HAVE METAL-TO-METAL CONTACT - USE PROVIDED MOUNTING SPACERS TO ACCOMMODATE FOR VEHICLE FEATURES, CARPET OR SUBFLOORS.

PROVIDE CLEARANCE FOR SPACERS - IF THE INSTALLATION VEHICLE CONTAINS A CARPET OR SUBFLOOR, USE A 1-3/16" DIAMETER CARPET CUTTER (P/N: 31183-0) AT ALL MOUNTING LOCATIONS TO OPEN UP ROOM FOR SPACERS.

CHECK SPACER ORIENTATION - BE SURE THAT THE INDENT IN THE SPACER COVERS THE PLUSNUT HEAD; THIS ENSURES THE MOST METAL-TO-METAL CONTACT AND REDUCES VIBRATION.

PLUSNUT INSTALLATION - A PLUSNUT GUN IS RECOMMENDED FOR PLUSNUT INSTALLATION FOR ITS PRODUCTION SPEED. HOWEVER, A PLUSNUT SETTING TOOL CAN ALSO BE USED (P/N: 22200-0).

THRU-BOLT CLEARANCE - WHEN USING A THRU-BOLT AT ANY MOUNTING LOCATION, BE SURE THAT YOUR HOLE HAS 1/16" CLEARANCE.

BEST PRACTICE: ORGANIZE ALL FASTENERS & VERIFY THAT ALL ARE ACCOUNTED FOR

PAGE: 3

FASTENERS USED

BAG REFERENCE: **BAGADU**

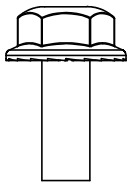

FAS0018
HEX FLANGE BOLT
1/4-20 X .63 LG
QTY: 04

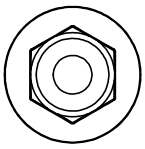

FAS0055
NYLOK FLANGE NUT
1/4-20 HEX
QTY: 04

FASTENERS USED

BAG REFERENCE: **BAGADURK**

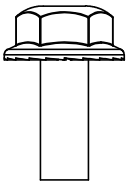

FAS0018
HEX FLANGE BOLT
1/4-20 X .63 LG
QTY: 08

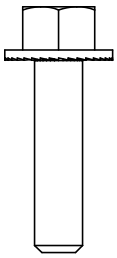

FAS0033
HEX FLANGE BOLT
1/4-20 X 1.00 LG
QTY: 02

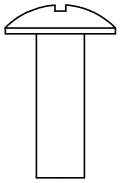

FAS0062
TRUSS HEAD PHILLIPS BOLT
1/4-20 X .75 LG
QTY: 02

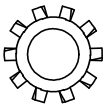

FAS0066
STAR LOCK WASHER
1/4
QTY: 02

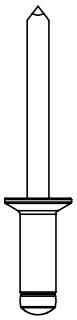

FAS0986
FLUSH MOUNT POP RIVET
3/16 X .188-.125
QTY: 04

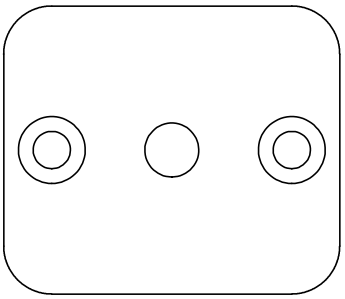

FADUSPACER
DRAWER UNIT SPACER
QTY: 02

INTENTIONALLY LEFT BLANK

STEP 1 - REMOVE DRAWERS FROM WRAPPER

Step 1.1

DISENGAGE TABS IN SLIDES TO REMOVE DRAWERS FROM WRAPPER BODY

THIS IS TO PROVIDE ACCESS TO MOUNTING HOLES AND ALLOW SUFFICIENT TOOL CLEARANCE

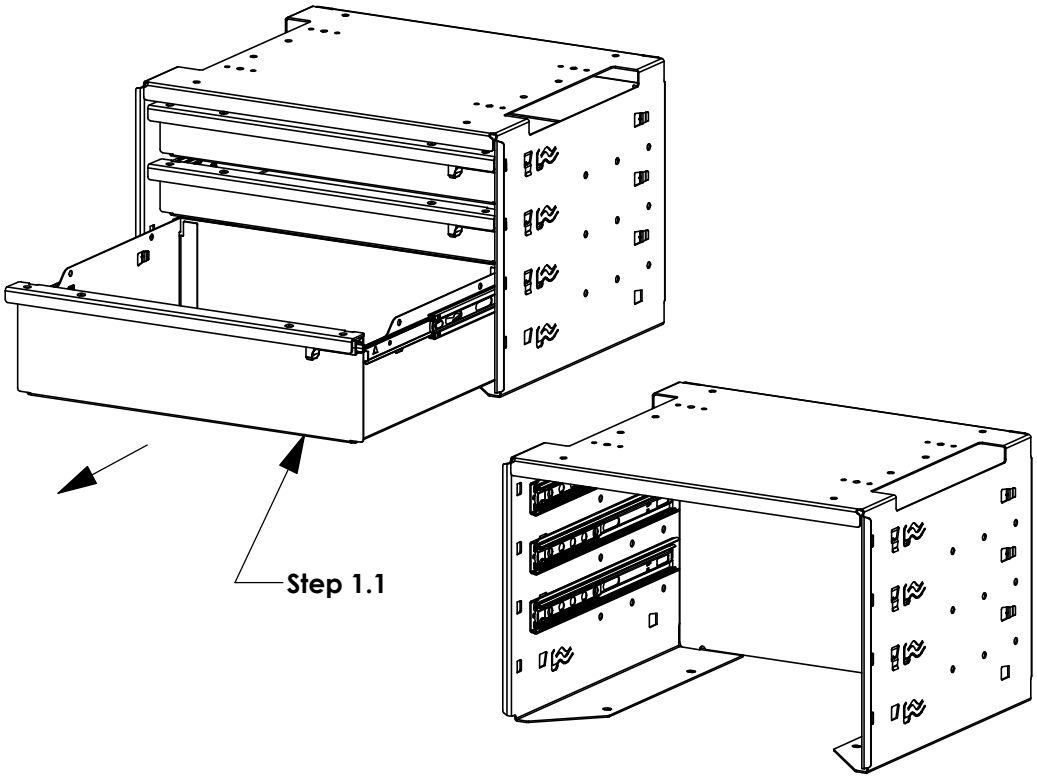

STEP 2 - STACKING DRAWER UNITS
****SKIP TO STEP 3 IF INSTALLING DRAWER UNIT(S) ON SHELVING UNIT*

Step 2.1

<u>FULLY TIGHTEN</u>
FAS0018 AND FAS0055

(04 PLACES)
7/16" WRENCH
7/16 "SOCKET

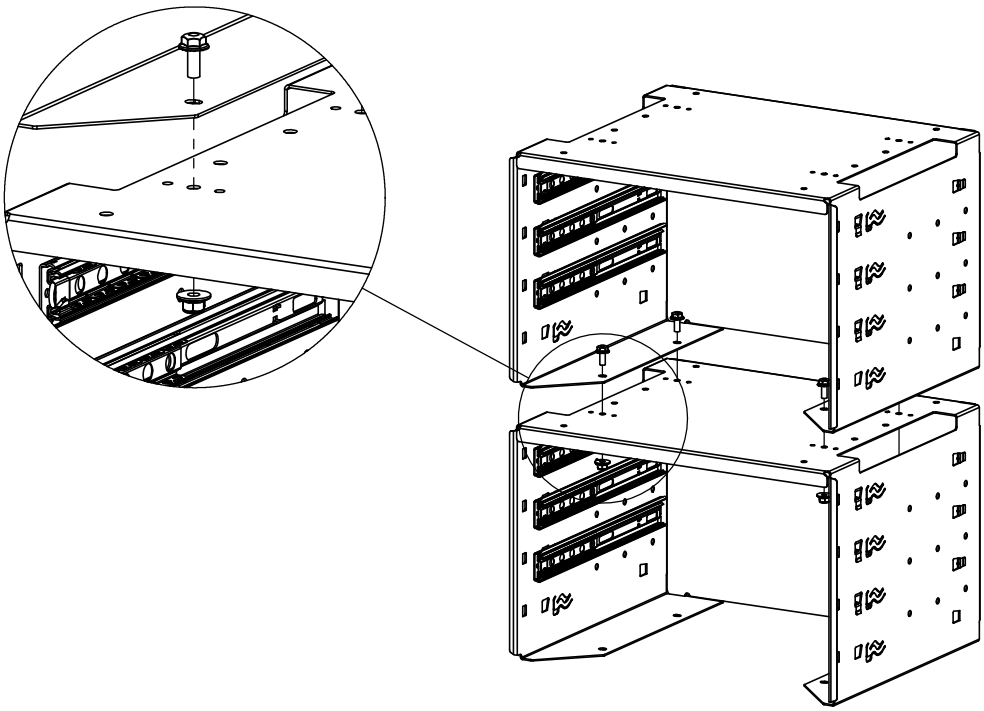

IF INSTALLING SHELF DIVIDERS ABOVE DRAWER UNIT, INSTALL THOSE AT THIS TIME!

DRAWER UNITS CAN BE INSTALLED ON SHELF AFTER THE SHELVING UNIT HAS BEEN INSTALLED IN THE VEHICLE!

STEP 3 - ATTACH SPACERS TO TOP OF DRAWER UNIT (SHELF INSTALL ONLY!)

Step 3.1

FULLY TIGHTEN
FADUSPACER AND
(2) FAS0986

(02 PLACES)
RIVET TOOL

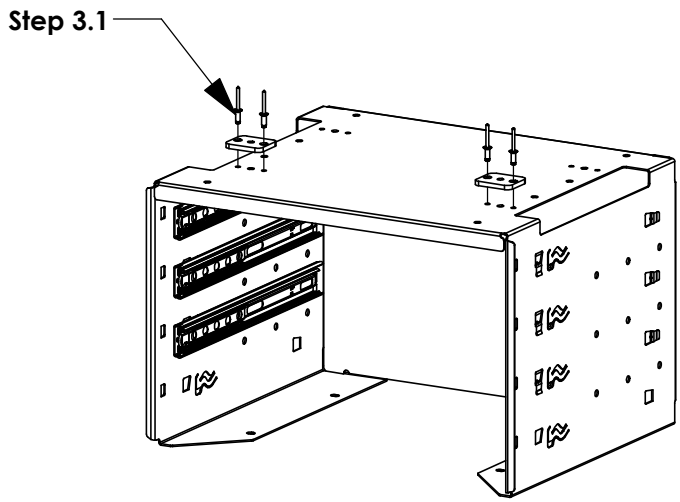

STEP 4 - ASSEMBLE RISER KIT TO SHELF (BOTTOM DRAWER UNITS ONLY!)

Step 4.1
FULLY TIGHTEN
FAS0018

(04 PLACES)
7/16" SOCKET

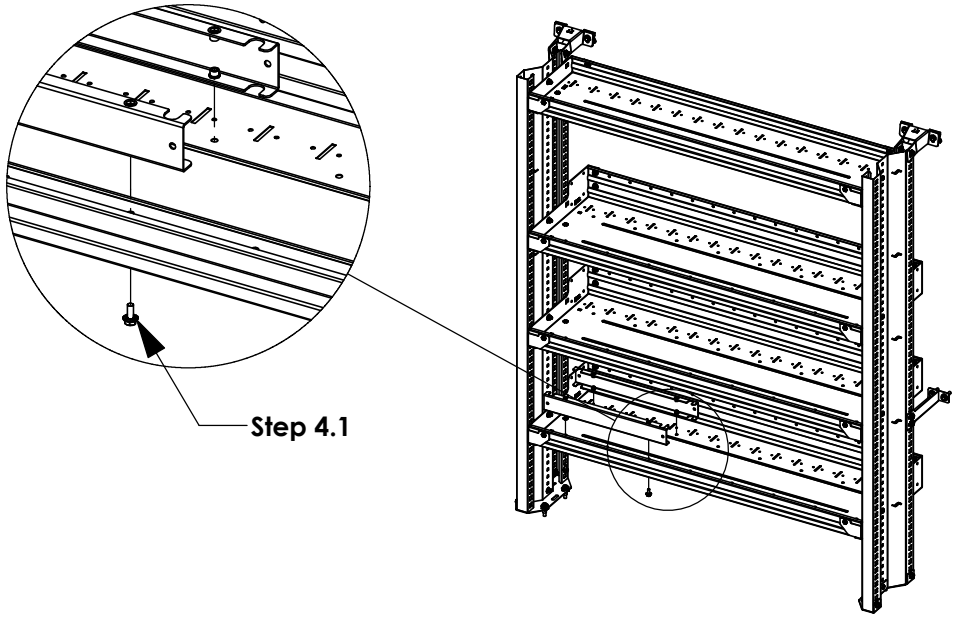

STEP 5A - ASSEMBLE REAR RISER TO SHELF (TOP DRAWER UNIT ONLY!)

Step 5A.1

FULLY TIGHTEN
FAS0062 AND FAS0066

(02 PLACES)
#3 PHILLIPS DRIVER

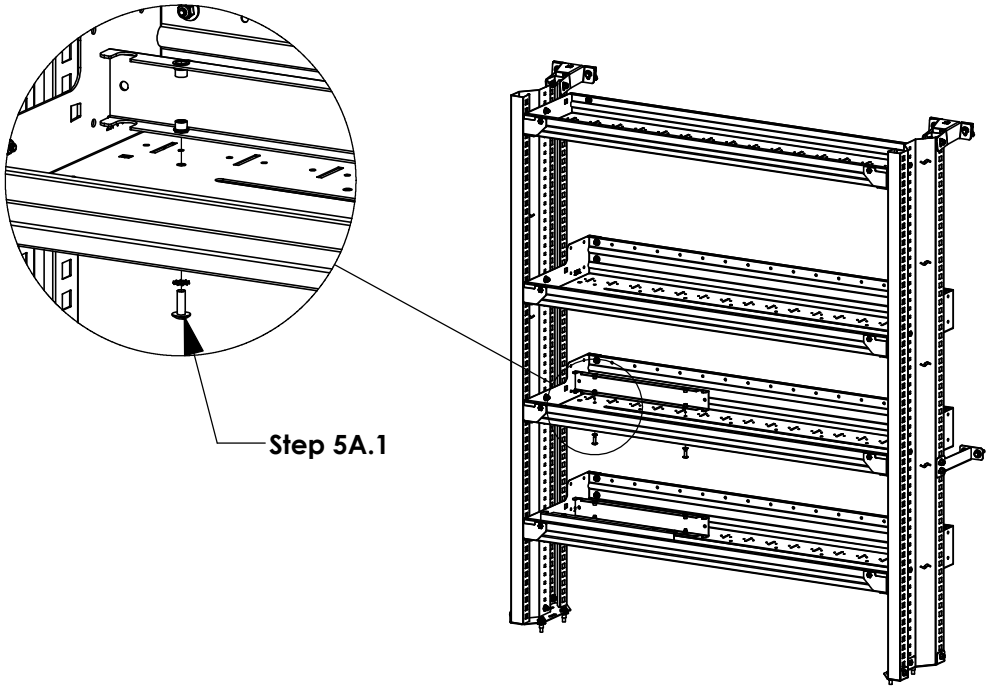

STEP 5B - ASSEMBLE FRONT RISER TO SHELF (TOP DRAWER UNIT ONLY!)

Step 5B.1

INSERT DRAWER-UNIT BELOW

Step 5B.2

FULLY TIGHTEN
FAS0033

(02 PLACES)
7/16 "SOCKET

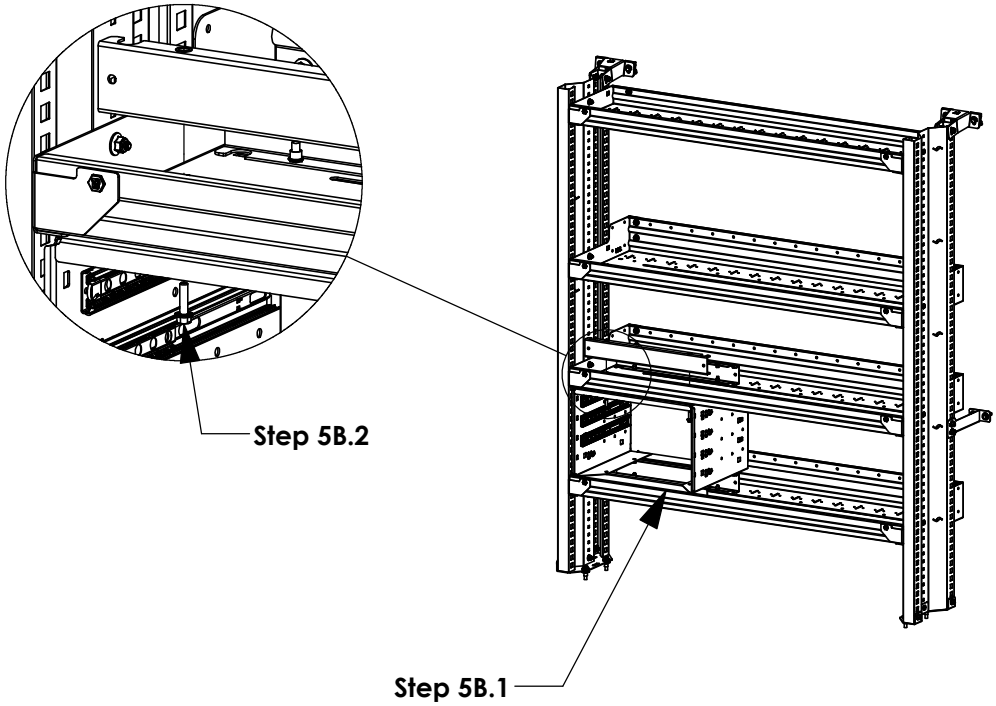

STEP 6 - ASSEMBLE DRAWER UNIT TO RISER

Step 6.1

<u>FULLY TIGHTEN</u>
FAS0018

(08 PLACES)
7/16" SOCKET

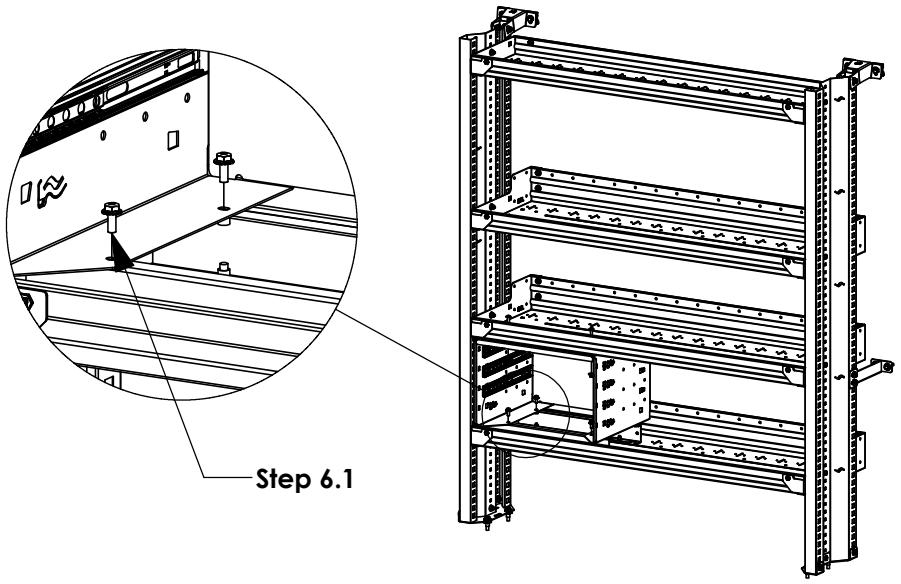

STEP 7 - ASSEMBLE TOP OF DRAWER UNIT TO SHELF ABOVE (TOP DRAWER UNIT ONLY!)

Step 7.1

IF INSTALLING ON SHELF DIRECTLY BELOW TOP SHELF, MARK AND DRILL HOLES TO MOUNT

9/32" OR "K" DRILL BIT (02 PLACES PER DRAWER UNIT)

Step 7.2

<u>FULLY TIGHTEN</u>
FAS0062 AND FAS0055

(02 PLACES)
#3 PHILLIPS DRIVER
7/16" SOCKET

FRONT HOLES ONLY!

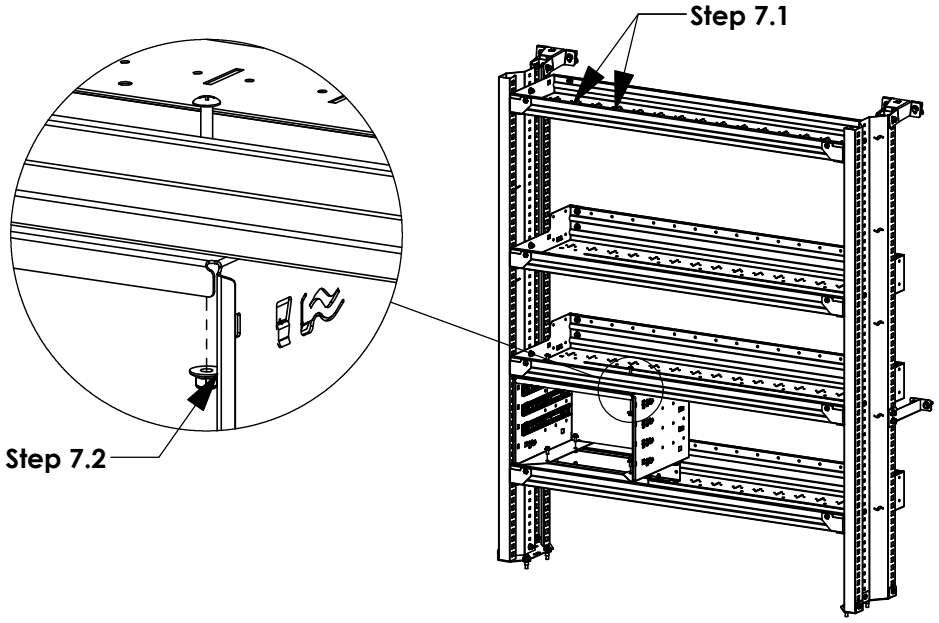

STEP 8 - INSERT DRAWERS BACK INTO SLIDES

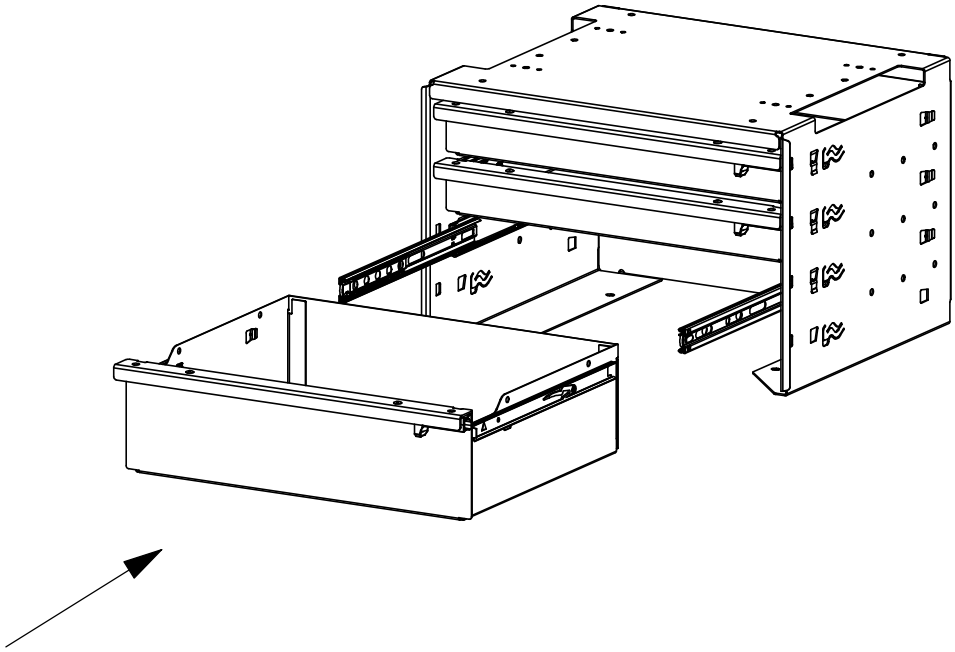

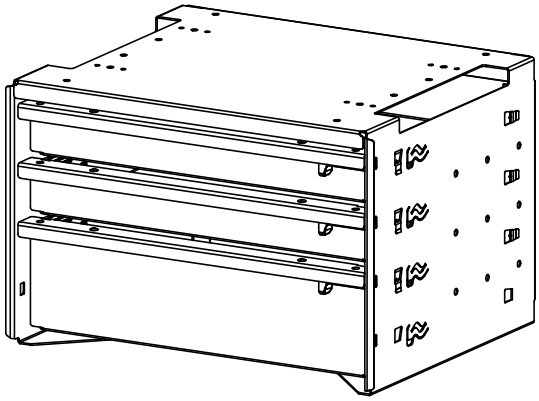

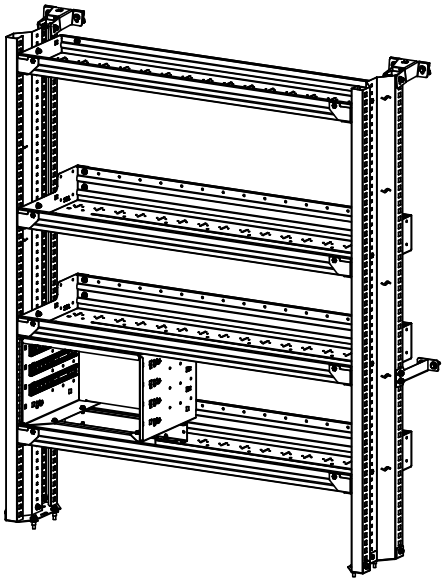

ASSEMBLY/INSATLLATION IS NOW COMPLETE!