RISER KIT, DC12

PRODUCT WEIGHT

2.12 LBS

WIDTH X DEPTH X HEIGHT

3" W X 1.75" H

CAPACITY

15 lbs Total Weight

COLOR

GRAY

CATALOG NUMBER

ADC12RK

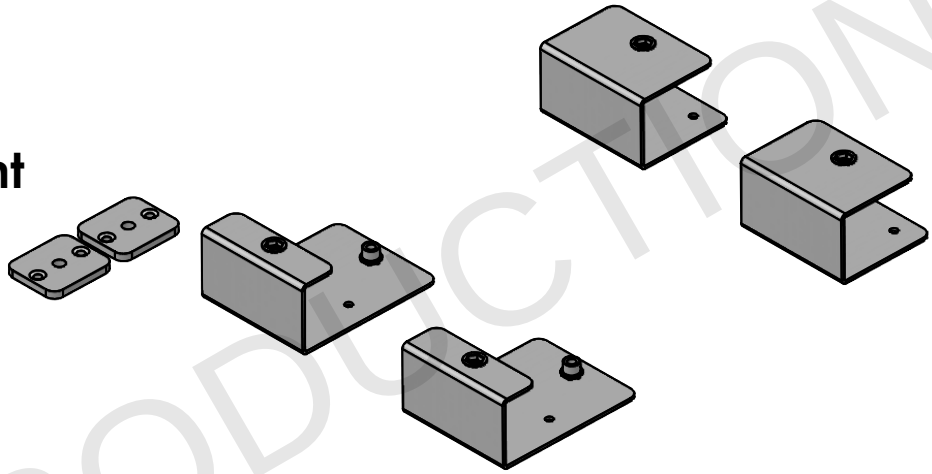

PRODUCT FEATURES

PRE-PRODUCTION

SEE PAGE 2 FOR APPLICATION NOTES, ACCESSORIES AND OTHER PRODUCTS THAT WORK WITH THIS UNIT.

ADRIAN STEEL
Cargo Management Solutions for Commercial Vehicles

RISER KIT, DC12

CATALOG NUMBER **ADC12RK**

PRODUCT APPLICATION

Elevates the DC unit above the front lip of the shelf, allowing easy access to all three drawers. The risers also allow the DC unit to be secured to the shelf above, giving the system a rigid connection.to be mounted on next generation shelving in vehicle bay. By lifting the drawer unit above the shelf surface. Works with 14" deep next gen shelving and DC12

NOTE: * - XX = WIDTH, # = NUMBER OF SHELVES
(EXAMPLE - ASFK2T1448G4)

ACCESSORIES THAT WILL WORK WITH THIS PRODUCT

CATALOG NUMBER	*DESCRIPTION (smart)*
*ASFK2T14XXG#	NEXT GENERATION SHELVING KIT
DC12	DRAWER COMPONET 12" WIDE

PRE-PRODUCTION

The information contained in this document is the sole property of ADRIAN STEEL COMPANY. ADRIAN STEEL COMPANY retains the right to modify and/or change the product of its design at any time with prior notification.

INSTR. NUMBER	PG:	REV:
:INSDCRK	1	A

PART NUMBER • ADC6RK, • ADC12RK

PART DESC. • RISER KIT, DC6, • RISER KIT, DC12

ADC6RK

ITEM NO.	PART NUMBER	DESCRIPTION	QTY.
1	81910-G	RISER BRKT, DC6 AND DC12, FRONT, GRAY	1
2	81911-G	RISER BRKT, DC6 AND DC12, REAR, GRAY	1
3	BAGDCRK	FAS BAG, DC RISER KITS	1
4	FADUSPACER	FLAT FOR ADUSPACER	1

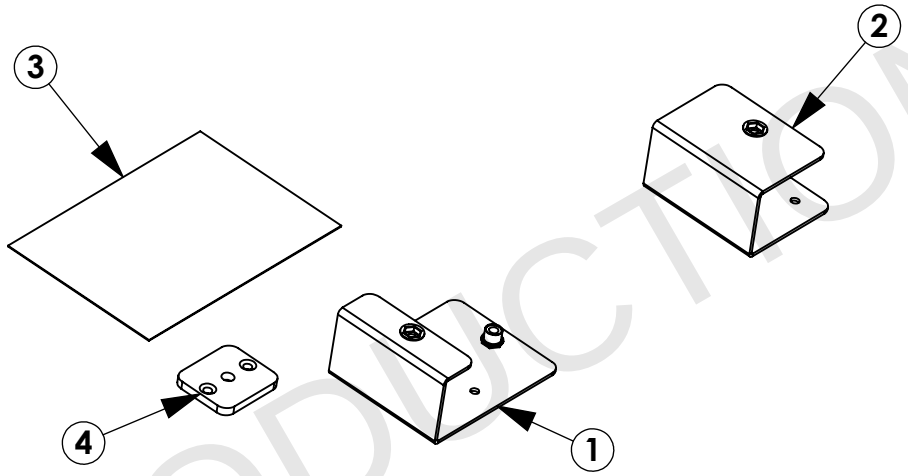

NOTE:
ADC6RK USED IN INSTRUCTIONS

ADC12RK

ITEM NO.	PART NUMBER	DESCRIPTION	QTY.
1	81910-G	RISER BRKT, DC6 AND DC12, FRONT, GRAY	2
2	81911-G	RISER BRKT, DC6 AND DC12, REAR, GRAY	2
3	BAGDCRK	FAS BAG, DC RISER KITS	1
4	FADUSPACER	FLAT FOR ADUSPACER	2

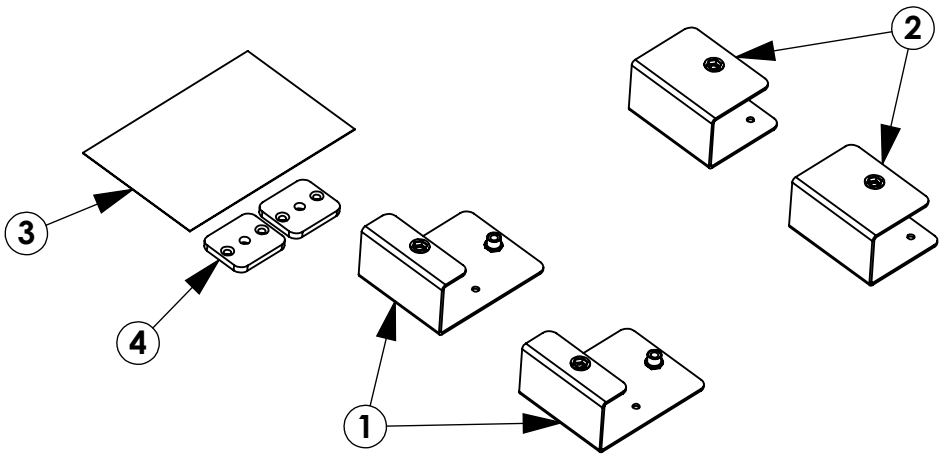

TOOLS NEEDED:

- **PHILPS HEAD SCREWDRIVER**
- **3/16" DRILL BIT**
- **9/32" DRILL BIT**
- **DRILL**
- **1/2" WRENCH**

PRE-PRODUCTION

BEST PRACTICES

GET TO KNOW THE VEHICLE - AT THE BEGINNING OF ANY INSTALLATION, CHECK THE LOCATION OF THE FUEL TANK, FUEL LINES, BRAKE LINES, HIGH VOLTAGE BATTERIES AND WIRING HARNESSES TO AVOID INJURY OR PROPERTY DAMAGE FROM TOOL CONTACT.

SEAL ALL EXTERIOR HOLES - ALL INSTALLATION HOLES SHOULD BE SEALED WITH BUTYL TAPE OR SILICON TO PREVENT WATER AND EXHAUST GASES FROM ENTERING THE VEHICLE.

CONTROL DRILL DEPTH - TO AVOID DAMAGE TO THE VEHICLE, USE A DRILL STOP OR CLEARED STEP BIT WHEN DRILLING INSTALLATION HOLES.

ALWAYS ADD PRIMER - WHEN ADDING INSTALLATION HOLES BE SURE TO USE A SELF-ETCHING PRIMER TO PREVENT CORROSION, FASTENER FAILURE AND INJURY.

MOUNTING POINTS MUST HAVE METAL-TO-METAL CONTACT - USE PROVIDED MOUNTING SPACERS TO ACCOMMODATE FOR VEHICLE FEATURES, CARPET OR SUBFLOORS.

PROVIDE CLEARANCE FOR SPACERS - IF THE INSTALLATION VEHICLE CONTAINS A CARPET OR SUBFLOOR, USE A 1-3/16" DIAMETER CARPET CUTTER (P/N: 31183-0) AT ALL MOUNTING LOCATIONS TO OPEN UP ROOM FOR SPACERS.

CHECK SPACER ORIENTATION - BE SURE THAT THE INDENT IN THE SPACER COVERS THE PLUSNUT HEAD; THIS ENSURES THE MOST METAL-TO-METAL CONTACT AND REDUCES VIBRATION.

PLUSNUT INSTALLATION - A PLUSNUT GUN IS RECOMMENDED FOR PLUSNUT INSTALLATION FOR ITS PRODUCTION SPEED. HOWEVER, A PLUSNUT SETTING TOOL CAN ALSO BE USED (P/N: 22200-0).

THRU-BOLT CLEARANCE - WHEN USING A THRU-BOLT AT ANY MOUNTING LOCATION, BE SURE THAT YOUR HOLE HAS 1/16" CLEARANCE.

PRE-PRODUCTION

BEST PRACTICE: ORGANIZE ALL FASTENERS & VERIFY THAT ALL ARE ACCOUNTED FOR

PAGE: 3

FASTENERS USED

BAG REFERENCE: **BAGDCRK**

ITEM NO.	PART NUMBER	DESCRIPTION	QTY.
1	FAS0062	SCREW,THP 1/4-20X.75 G5ZP	4
2	FAS0069	Screw, Truss Hd. Ph, 1/4-20x1.00	6
3	FAS0784	Rivet, Blind, Buttonhead, 3/16x.25 Grip	9
4	FAS1030	RIVET, BLIND, 3/16, 0.078"-0.375" GR	4
5	FAS0440	NUT,HEX NLK FLG 5/16-18 - ZP	2

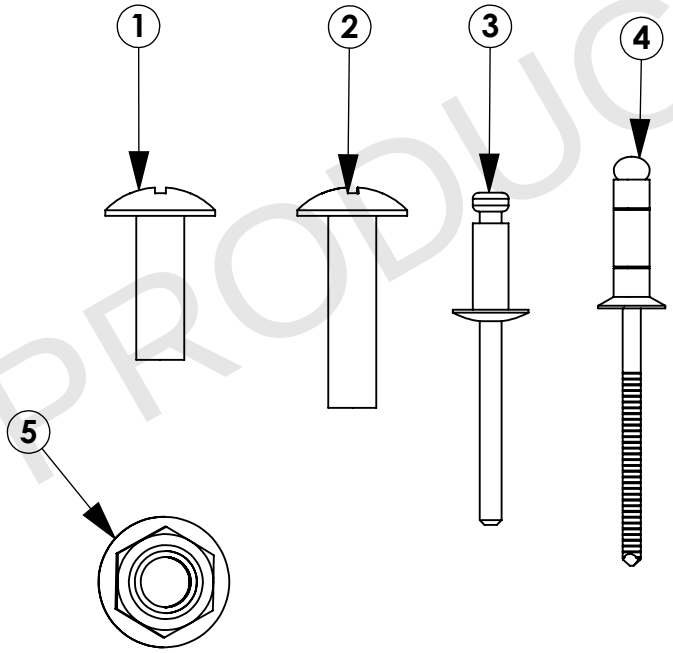

PRE-PRODUCTION

INTENTIONALLY LEFT BLANK

PRE-PRODUCTION

STEP 1 - MOUNTING DC RISERS TO SHELVING

Step 1.1
DETERMINE DRAWER LOCATION IN SHELVING, REMOVED DRAWERS FROM DC6

Step 1.2
REMOVE DC6, PLACE BRACKETS ON SHELVING.

HAND TIGHTEN FAS0062

PHILPS HEAD SCREWDRIVER

FULLY TIGHTEN AFTER Step 3.2

Step 1.2A
IF DRAWER IS GOING TO BE PLACED NEXT TO END PANELS, BEFORE PLACING DC6 ON RISERS, SWITCH FAS0924 AND FAS0055 PLACES ON THE SHELF ABOVE THE DRAWER

1/2" WRENCH

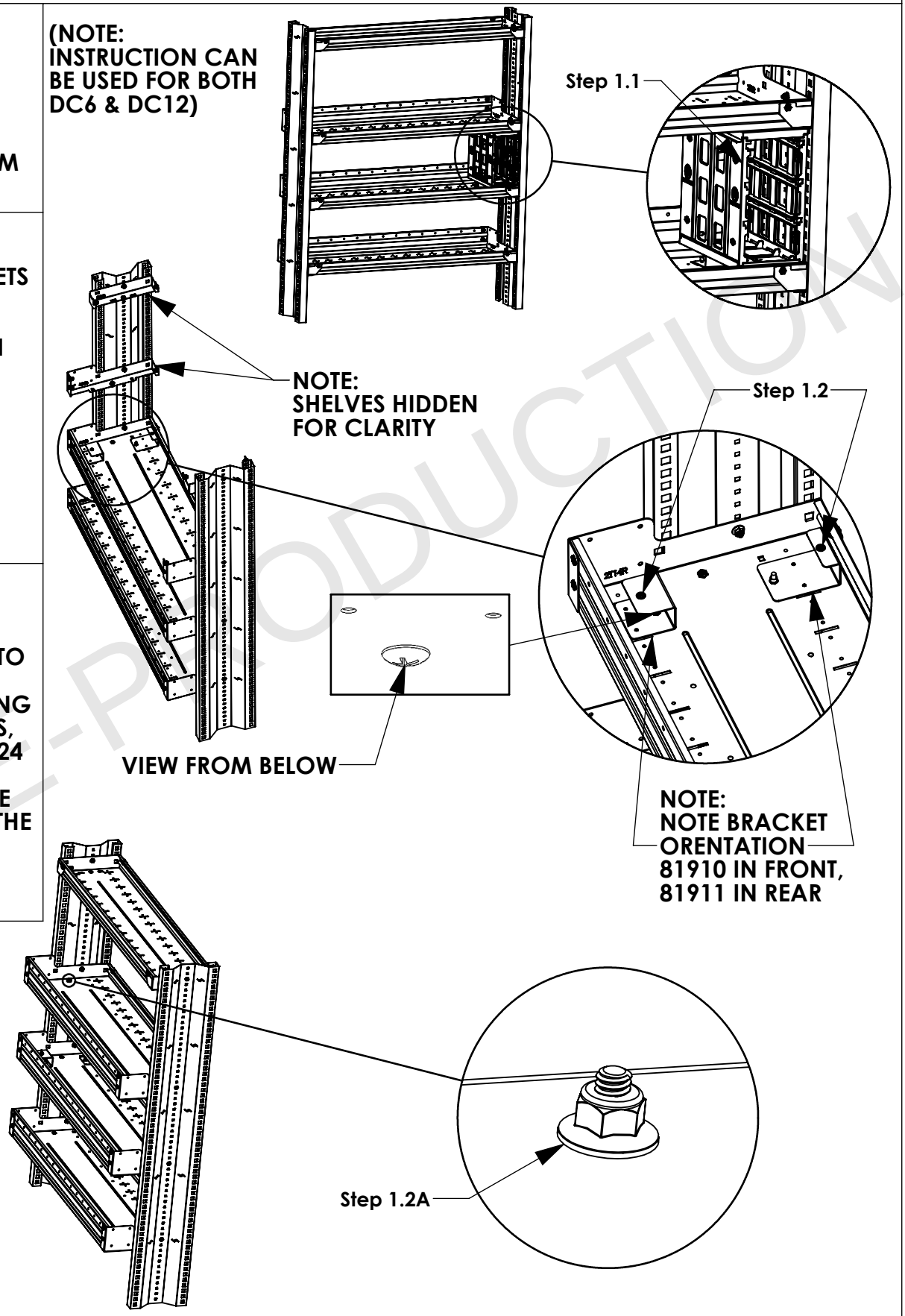

PRE-PRODUCTION

STEP 2 - ADDING SPACER TO DC6

Step 2.1
FOR DRAWERS THAT DO NOT HAVE HOLES FOR SPACER ON DC6 , PLACE SPACER IN SHELVING AND MARK WHERE TO DRILL 9/32" CENTER HOLE INTO DRAWER

Step 2.2
AFTER 9/32" HOLE HAS BEEN MARKED ALIGN HOLE IN SPACER AND MARK (2) 3/16" HOLES IN DRAWER, DRILL ALL HOLES

3/16" & 9/32" DRILL BIT
DRILL

Step 2.3
AFTER (2) 3/16" HOLES HAVE BEEN DRILLED, OR ARE EXISTING.

PLACE FADUSPACER OVER HOLES, AND RIVET (2)FAS1030 TO DC6

RIVET GUN

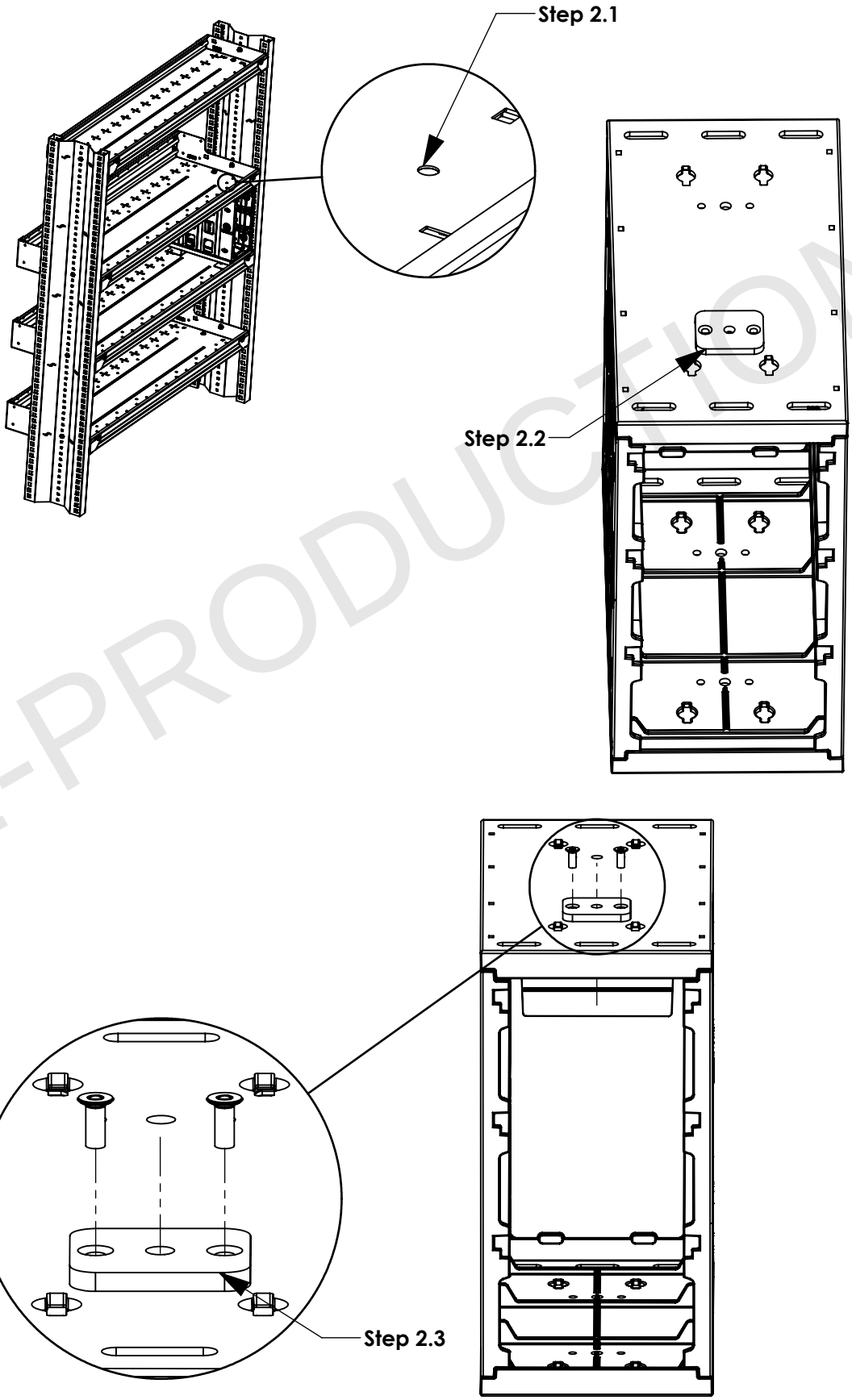

PRE-PRODUCTION

STEP 3 - INSTALL DC6 TO SHELVING

Step 3.1
PLACE DC6 BACK INTO SHELVING, FULLY TIGHTEN (3)FAS0069 & FAS0440

PHILPS SCREWDRIVER
1/2" WRENCH

Step 3.2
RIVET (4)FAS0784 UNDER SHELVING TO SECURE RISERS

RIVET GUN

(TIGHTEN ALL FASTENERS)

Step 3.3
PLACE DRAWERS BACK IN DC6

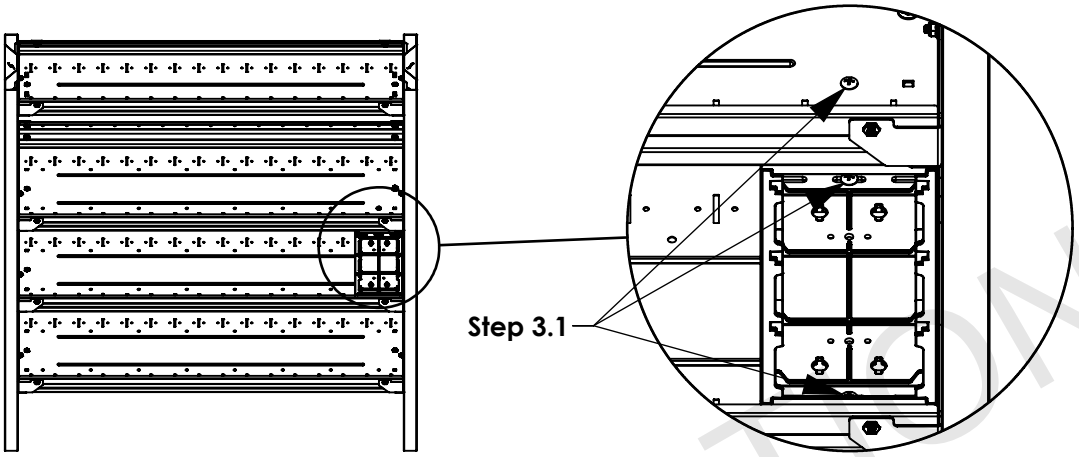

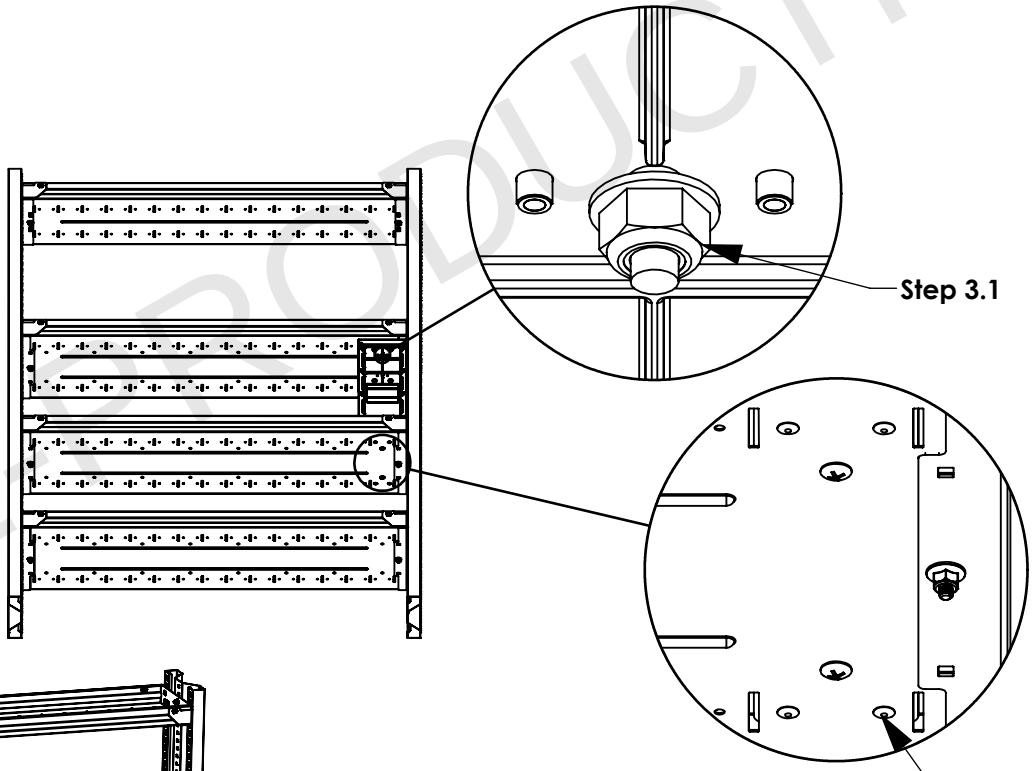

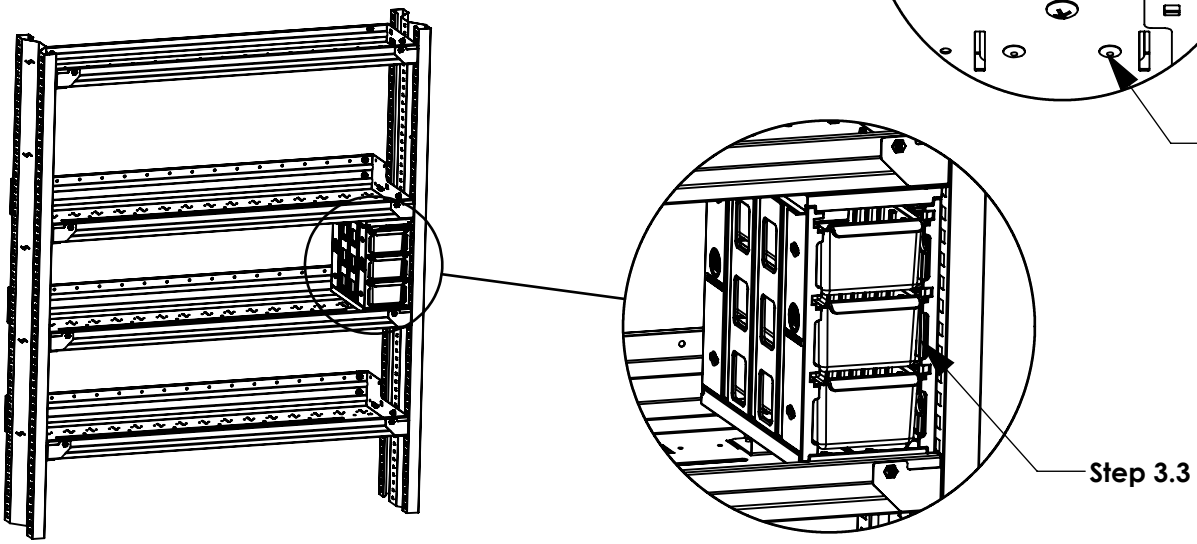

PRE-PRODUCTION