KIT, PLUG & PLAY LIGHTING FOR SLIDE OUT TRAY RAM PROMASTER CITY

CATALOG NUMBER

83104



LED dome light centered and angled down on the trays to provide optimal lighting.

PRODUCT FEATURES

Plug & Play Lighting for Small Rear Slide Out Tray For the 2027 RAM ProMaster City.

- **This kit includes: LED Light with a shroud to angle the light onto the tray. Red rocker switch to control the light.**
- **The new timer lighting module (TLM) is also included to protect the battery in the event the lights are left on for too long.**
- **The light is switch controlled. The switch is located on the front of the unit providing easy on-off control.**

The information contained in this document is the sole property of ADRIAN STEEL COMPANY. ADRIAN STEEL COMPANY retains the right to modify and/or change the product of its design at any time without prior notification.

Introduction / Comments:

Slide Out Tray Lighting Installation Instructions

Note:
Read all instructions prior to installation. Review the Adrian Steel **GENERAL PRECAUTIONS PAGES (56638**) before attempting installation. Only personnel familiar with using electrical best practices should perform this install. Reference **ELECTRICAL BEST PRACTICES MANUAL (54479)** before attempting installation.



83357

Slide Out Tray Lighting Installation Instructions

Harnesses & Components Needed:





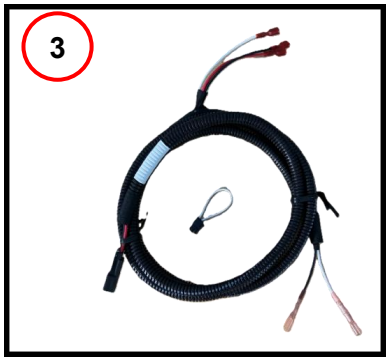

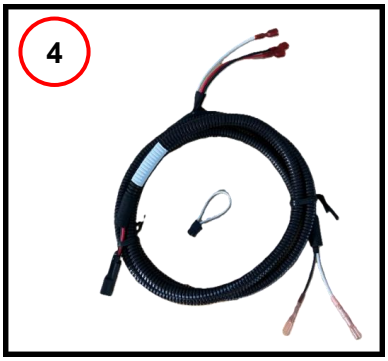







#	Part Number	Description
1	76163	Battery to TLM Power
2	71902	TLM
3	82804	Small Slide Out Harness
4	82805	Large Slide Out Harness
5	64244	Module Adapter Harness
6	63481	Roof Bow Harness #1
7	63482	Roof Bow Harness #2
8	63483	Roof Bow Harness #3
9	63484	Roof Bow Harness #4
10	83067	Red Rocker Switch
11	83066	M30 Techniq Light

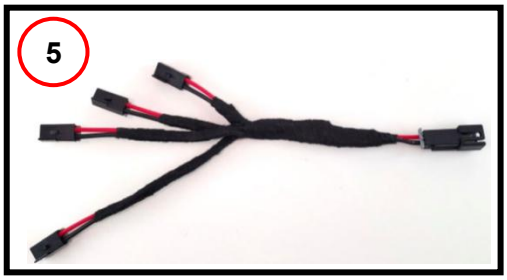







Please note: Not all harnesses will need to be used for every installation. These instructions are for multiple cases, so they are to be used as reference. Reference the instructions for only what you are installing.

Overall Harness Diagram

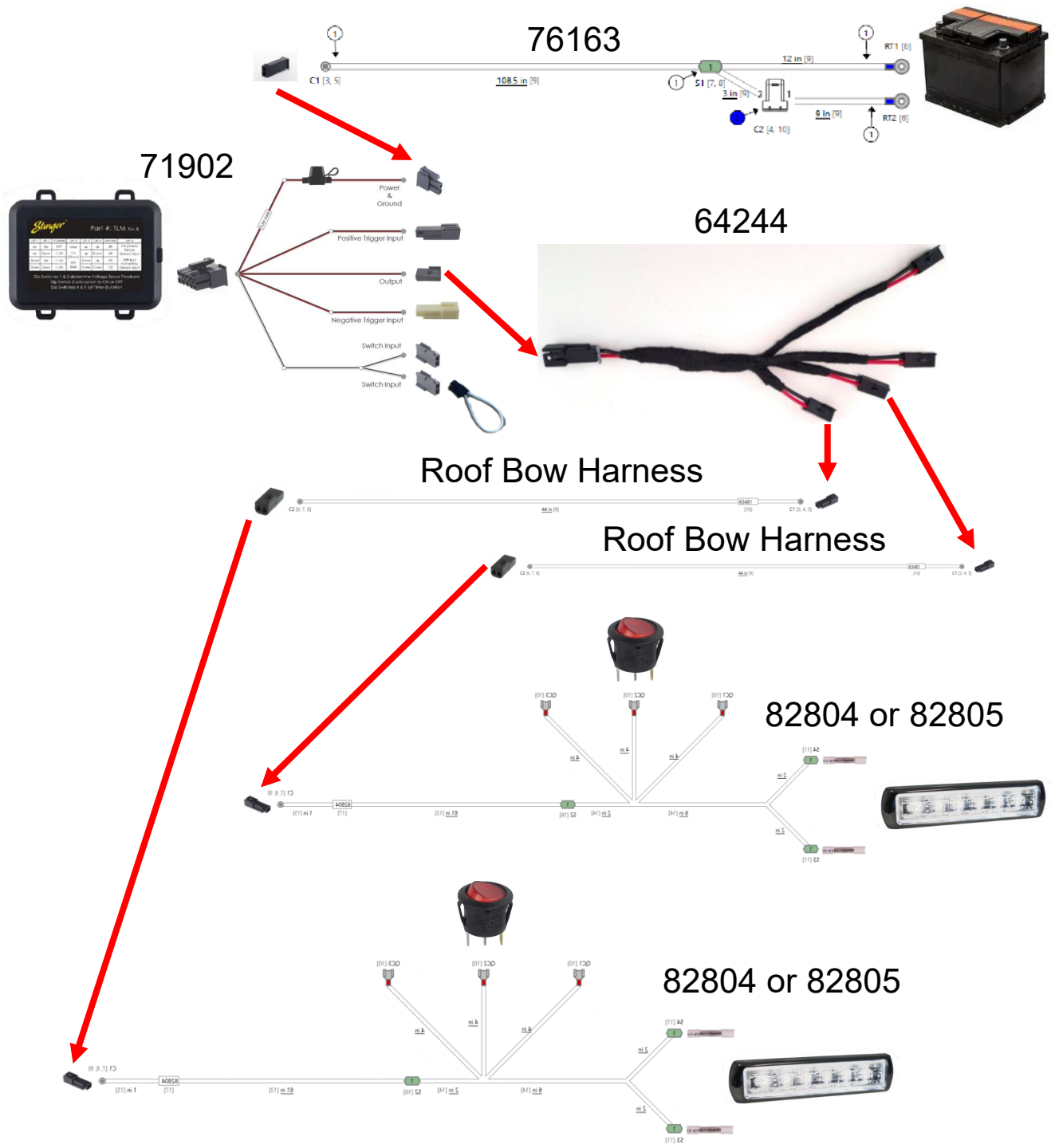

Vehicle Routing

Just Passenger Side Unit

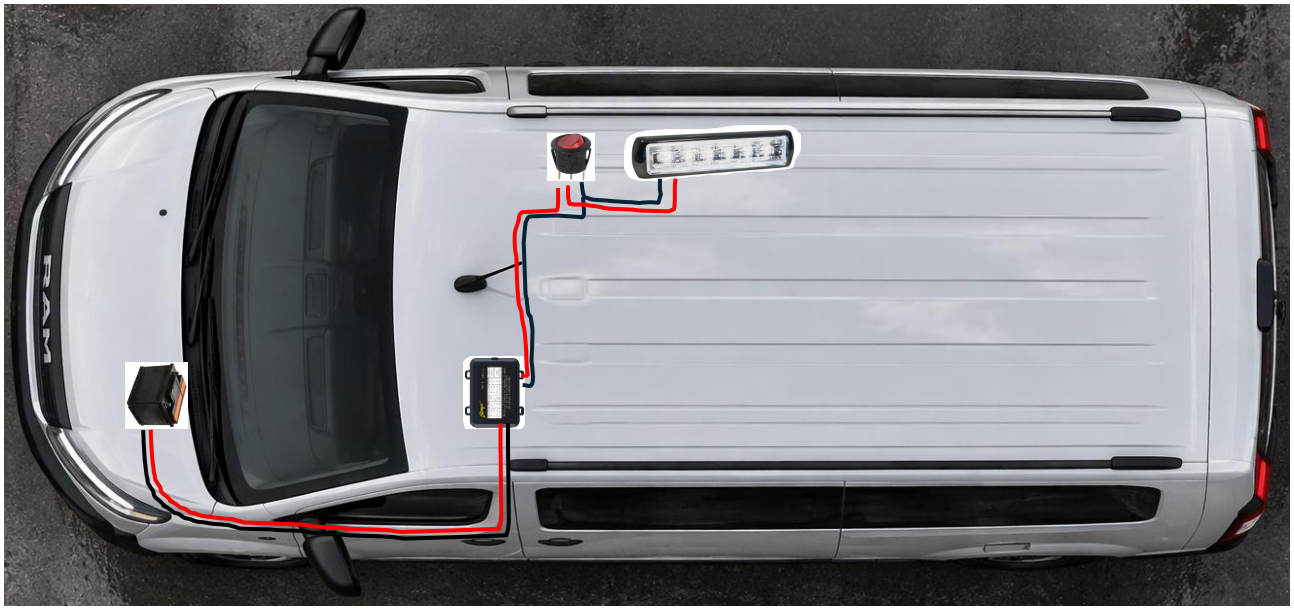

Passenger Side & One Rear Unit

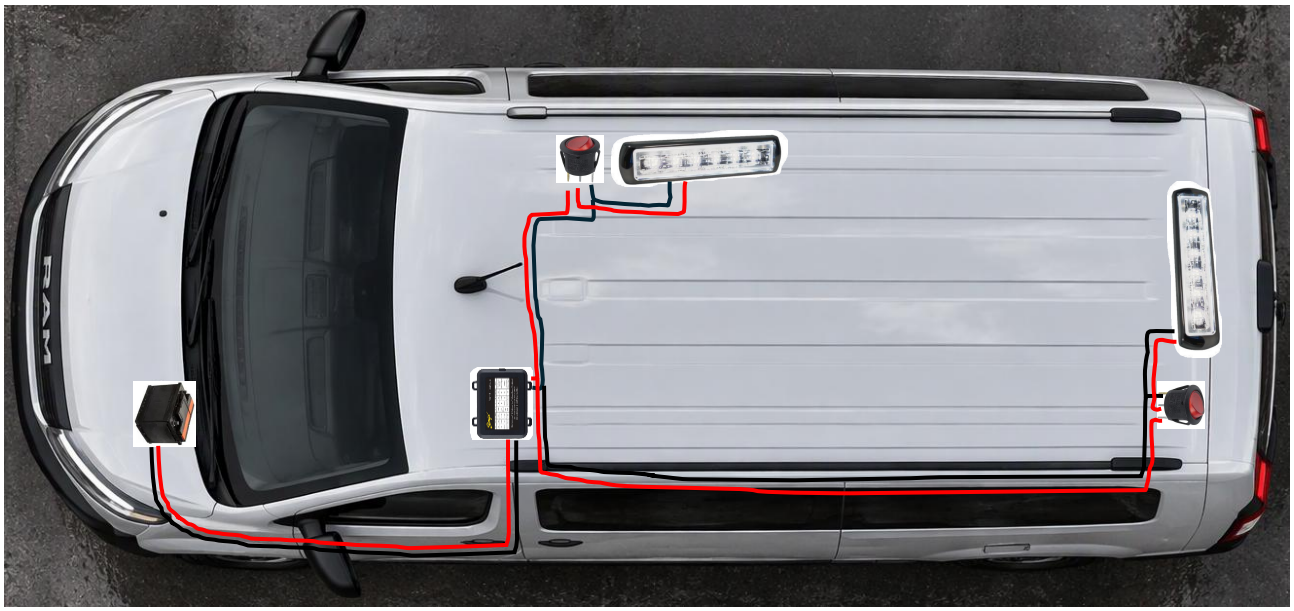

Vehicle Routing Continued

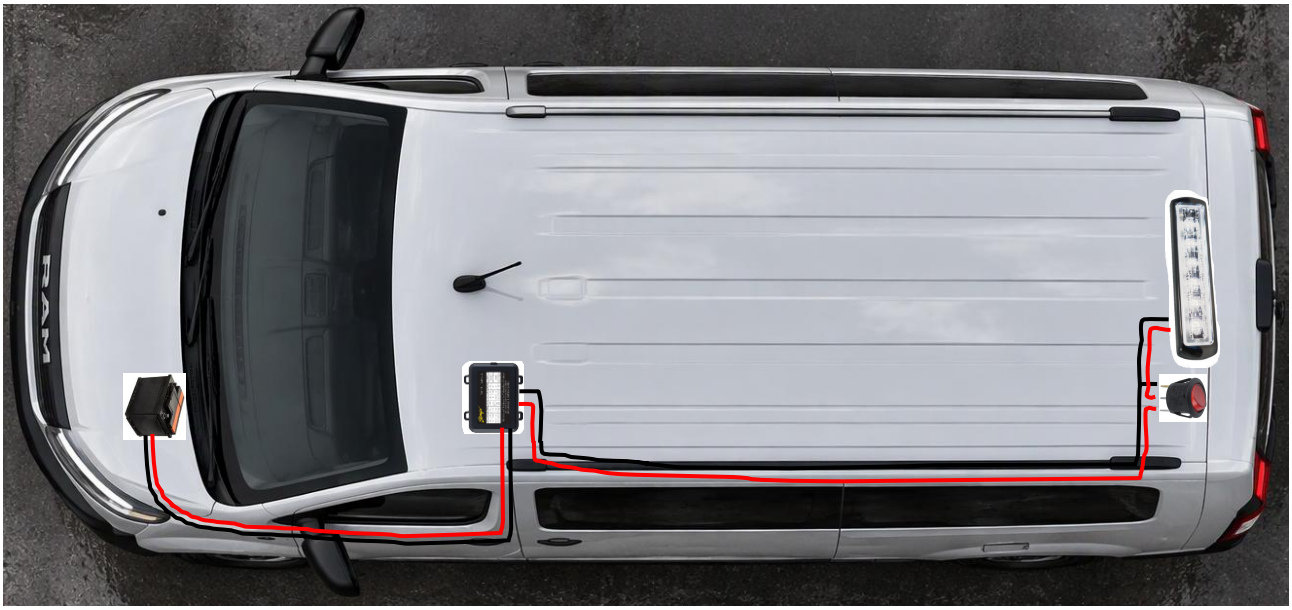

TLM Dip Switch Settings

TLM Rev B:

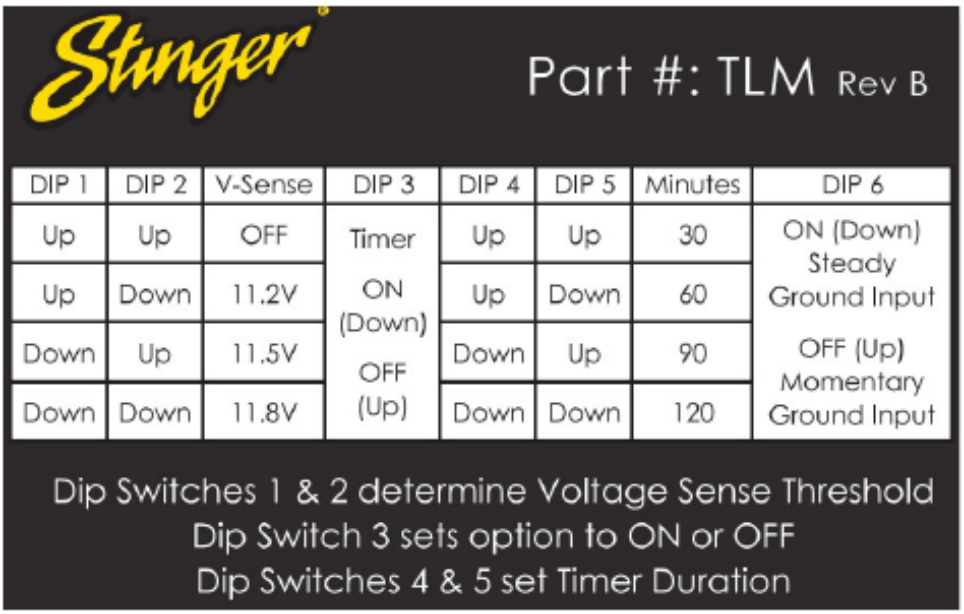

Dip Switch Settings:

1	2	V-Sense	3	4	5	6
Down	Down	11.8	Down	Down	Up	Down

Harness Routing Instructions

Step 1:



- Locate power harness 76163 and remove the in-line fuse from the harness until after the installation.
- Secure the ring terminals to the battery post.

Step 2:

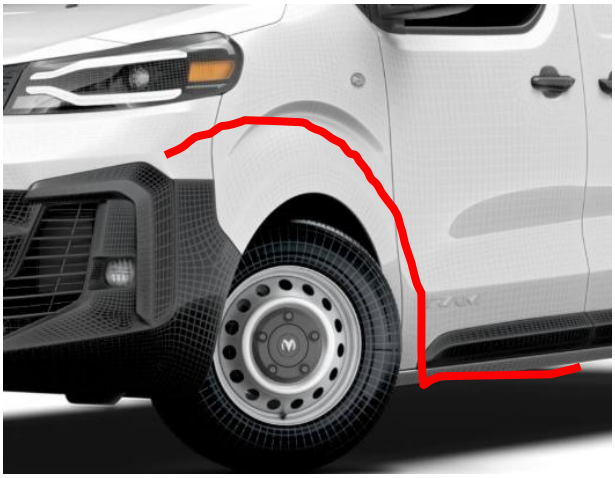

- Begin routing the harness to the driver side. Then feed the harness through the cavity above the wheel towards the driver door.
- The harness will come out underneath the vehicle below the drive door.

Step 3:



- Now in the driver doorstep, remove the piece of trim pictured to access the floor grommet.
- Route the harness from underneath the vehicle up through the grommet.

Step 4:



- Route the harness to behind the seat as shown.
- Locate the 71902 TLM and the harness with it. Plug the harness in and then connect the power harness to the TLM.
- Make sure to set the dip switches as shown on page 6.

Dip Switch Settings:

1	2	V-Sense	3	4	5	6
Down	Down	11.8	Down	Down	Up	Down

Step 5:

- If there is only one slide out being installed, then the roof bow provided can be plugged into the output connector of the TLM.
- If there are multiple slide outs being connected, then locate the provided adapter harness 64244 and plug this into the output connector of the TLM. The provided roof bows then can be connected to the adapter harness.
- Locate the small jumper wire provided with the harness and plug it into one of the switch input connectors.

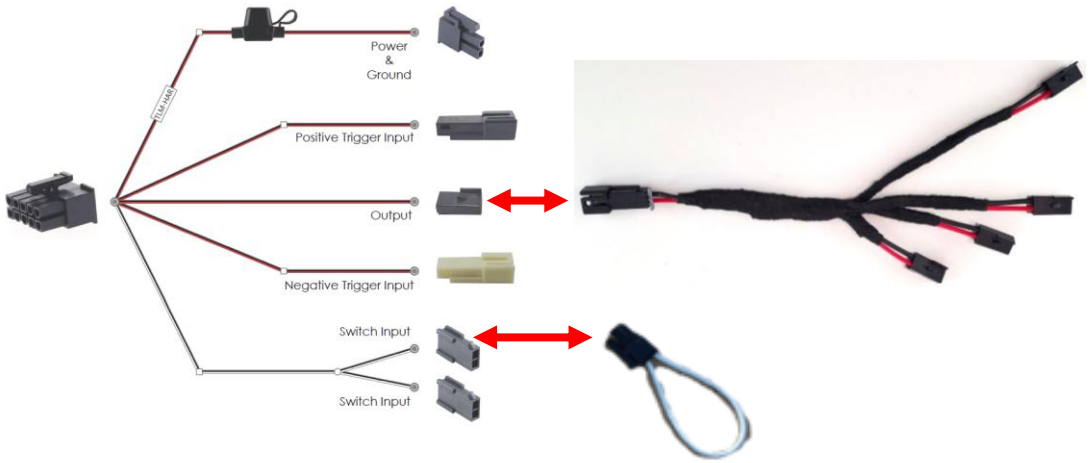

Step 6:

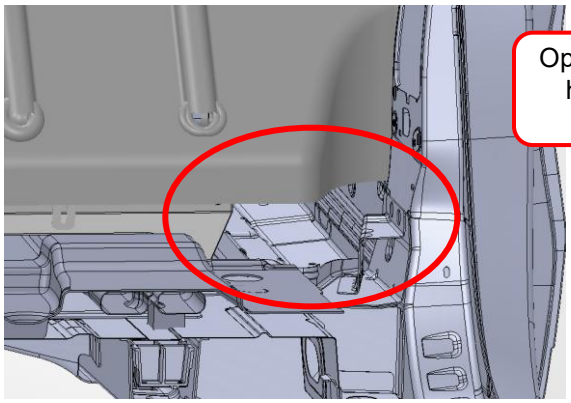

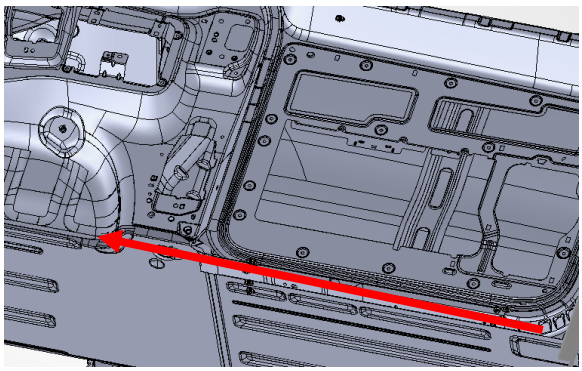

- Now route the harness to the cargo area of the vehicle. Use the small opening in the corner of the partition and side of the vehicle.
- For rear units route the roof bow along the corner of the floor and wall to the rear unit. For the Passenger side unit, route along the floor to the unit.
- Make sure to secure the harness.
- Route the harness to the left side of the slide out.

Lighting Installation on Slide Out

Please Note: This part may be easier to do before the slide is installed in the vehicle.

Step 1:

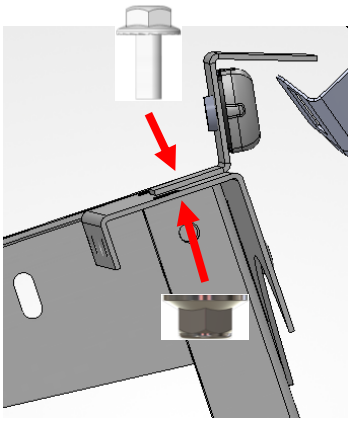

- Begin by locating the M30 light, fasteners & bracket for light, red rocker switch, and either the 82804 or 82805 harness.
- Using the provided fasteners with the light secure the light to the bracket as shown.
- Then use the nut and bolt provided in BAGADU to secure the bracket to the sliding tray.

Step 2:

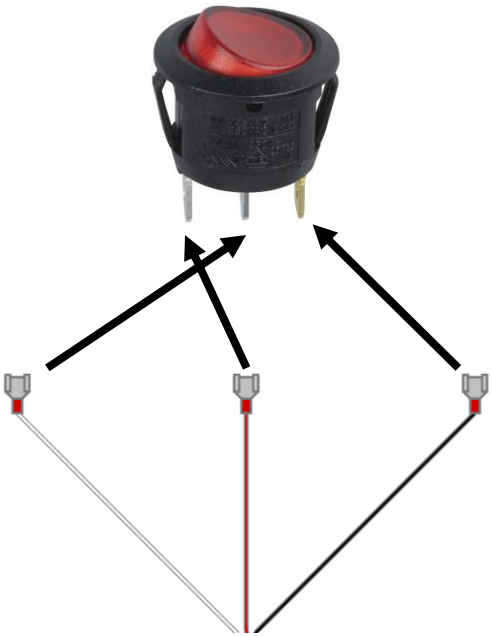

- Locate the red rocker switch and connect the pigtails on the lighting harness to the switch as shown below.
- Then secure the switch into the hole on the right side of the slide out.
- Connection as follows:

Black wire to gold tab
White wire to the middle tab
Red wire to the outer silver tab

Step 3:



- Crimp the pigtails from the light to the butt connectors on the lighting harness as shown below.

Step 4:

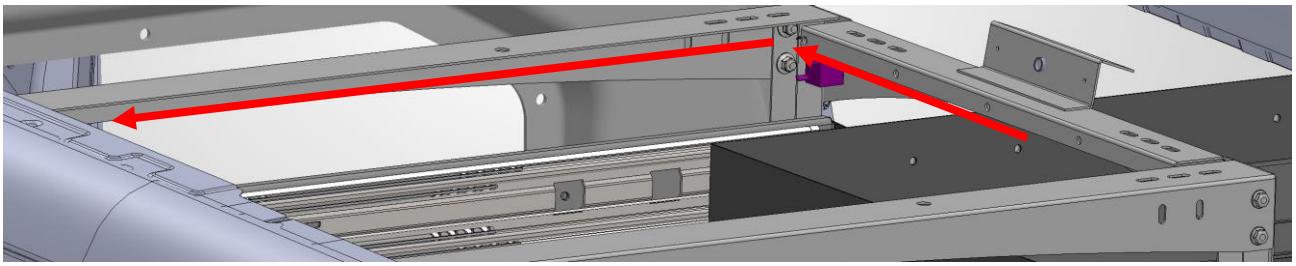

- Now route the lighting harness to the rear of the slide out as shown above.
- Use the holes along the slide out to secure the harness with Christmas tree zip ties.

Step 5:

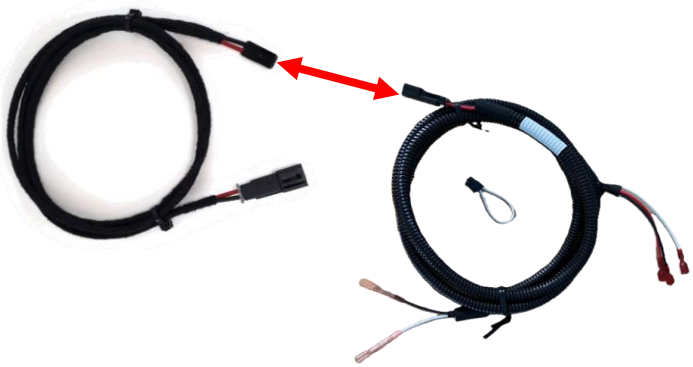

- Once the harness is at the rear connect it to the roof bow that was routed to the back of the unit.
- Now secure the harness. If there is extra harness bundle the harness at the rear of the slide out on the floor.

Final Check

- Once install is complete reinsert the fuse into the power harness and test that the light works.
- Make sure all harnesses are secured and bundled up neatly and tucked away.
- Make sure all trim pieces are reinstalled.

PART NUMBER
33106-0

ITEM DESCRIPTION: CABLE TIE, NYLON, 8" LONG, 50#

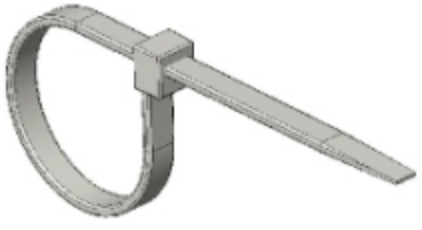

MANUFACTURER: FASTENAL OR EQUIVELENT
MANUFACTURERS PART NUMBER: 63125 OR EQUIVELENT

SPECIFICATIONS:
8" NOMINAL LENGTH +/- .5"
1-3/4" MAXIMUM BUNDLE DIAMETER + .25 / -.00
50lbs TENSILE STRENGTH +/- 10LBS
COLOR: NATURAL

SPECIAL NOTES: PART NUMBER IS FOR A PACKAGE OF 1000

SUPPLIED BY: THIS ITEM IS ADRIAN SUPPLIED!

PURCHASED PRODUCT DATA SHEET (PPDS)

THIS DRAWING/INFORMATION IS THE PROPERTY OF ADRIAN STEEL COMPANY AND IS NOT TO BE USED IN ANY MANNER THAT IS DETRIMENTAL TO THE INTEREST OF ADRIAN STEEL. COPYRIGHTS AND OR PATENTS THAT MAY BE THE PROPERTY OF APPLICABLE OWNERS MAY PROTECT INFORMATION AND/OR DRAWINGS OF SUPPLIED PRODUCTS.

ADRIAN STEEL
VAN AND PICKUP EQUIPMENT
906 JAMES STREET
ADRIAN, MI 49221
517-265-6194
WWW.ADRIANSTEEL.COM

⚠ CAUTION ⚠
WHEN INSTALLING EQUIPMENT IN OR ON VEHICLES CHECK FOR FUEL TANKS, FUEL LINES, CONTROL LINES AND ELECTRICAL WIRING BEFORE DRILLING! ALWAYS USE DRILL BITS WITH INTEGRAL STOPS WHENEVER POSSIBLE!

DRAWN BY	DATE DRAWN
JLC	06/16/2006
ECN NUMBER	ECN DATE
16721	9/17/14
PART WEIGHT	REV. LEVEL
0.01 LBS.	C
PART NUMBER	
33106-0	

PART NUMBER **51699**

ITEM DESCRIPTION: WIRE TIE. FIR TREE 0.38"



MANUFACTURER: Digi-Key
MANUFACTURERS PART NUMBER: 156-00089-ND

SPECIFICATIONS: 6.0” Long Fir Tree Cable Tie, Mounting Hole Diameter .38”-.39”

SPECIAL NOTES: NA

SUPPLIED BY: THIS ITEM IS ADRIAN AVAILABLE!

PURCHASED PRODUCT DATA SHEET (PPDS)

THIS DRAWING/INFORMATION IS THE PROPERTY OF ADRIAN STEEL COMPANY AND IS NOT TO BE USED IN ANY MANNER THAT IS DETRIMENTAL TO THE INTEREST OF ADRIAN STEEL. COPYRIGHTS AND OR PATENTS THAT MAY BE THE PROPERTY OF APPLICABLE OWNERS MAY PROTECT INFORMATION AND/OR DRAWINGS OF SUPPLIED PRODUCTS.

ADRIAN STEEL
Cargo Management Solutions for Commercial Vehicles

906 JAMES STREET
ADRIAN, MI 49221
517-265-6194
WWW.ADRIANSTEEL.COM

⚠ CAUTION ⚠

WHEN INSTALLING EQUIPMENT IN OR ON VEHICLES CHECK FOR FUEL TANKS, FUEL LINES, CONTROL LINES AND ELECTRICAL WIRING BEFORE DRILLING! ALWAYS USE DRILL BITS WITH INTEGRAL STOPS WHENEVER POSSIBLE!

DRAWN BY	DATE DRAWN
DJB	**5/23/2016**
ECN NUMBER	**ECN DATE**
18575	**5/23/2016**
PART WEIGHT	**REV. LEVEL**
.010 LBS.	**A**
PART NUMBER	
51699	

Bill of Materials

Id	Description	Manufacturer	Part Number	Quantity
1	Red, 18 AWG, TXL, 19/30 Stranding	Prysmian	140586-91	44.42 in
2	Black, 18 AWG, TXL, 19/30 Stranding	Prysmian	140104-91	44.42 in
3	Metri-Pack 150 Connector, 2pos, Receptacle	Aptiv	12047663	1
4	Metri-Pack 150 Lock, For Receptacle Connector	Aptiv	12047665	1
5	Metri-Pack Contact, 18-16 AWG, Pin	Aptiv	12047581	2
6	Metri-Pack 150 Connector, 2pos, Plug	Aptiv	12047662	1
7	Metri-Pack 150 Lock, For Plug Connector	Aptiv	12047664	1
8	Metri-Pack 150 Contact, 18-16 AWG, Socket	Aptiv	12047767	2
9	Anti-Abrasion Wire Harness Tape, Black	Tesa	TS51036 1.	
10	Generic Heat Shrink Label		Label	1
11	Fir Tree Cable Tie, 8" Long, 1/4" Mount, Black	HellermannTyton	T50RTM250HSM4	5

Coverings

Id	Assembly
[9]	

Notes



C2 [6, 7, 8]

44 in [9]

63481

[10]

C1 [3, 4, 5]



From	To	Color	Size	From Contact PN
C2.A	C1.A		18 AWG	12047767
C2.B	C1.B		18 AWG	12047767

From	To	Color	Size	From Contact PN
C1.A	C2.A		18 AWG	12047581
C1.B	C2.B		18 AWG	12047581



[11]

Revisions

Rev.	Date	Author	Description
A	10/27/26	Andrew Oswalt	Initial Drawing

Initial ECN	24359	Drawn By	APO
Current ECN	24359	Weight (lb)	0.2
ECN Description		Sheet	1 of 1
RELEASE FOR PRODUCTION		Size	11" x 17"

Part Number 63481 Or P-HARRB1 Segment EAU

Description ROOF BOW HARNESS #1

All dimensions in inches unless otherwise specified.
Harness length tolerance = +/- 5%, max ≤ 5 in.
Loom/tape to connector gap = 1 in. +/- 10%
Wires in bundle length tolerance = +/- 5%, max ≤ 1 in.
Terminal wire strip length tolerances controlled by MFG.

ADRIAN

This document contains confidential and proprietary information that cannot be reproduced or divulged, in whole or in part, without written authorization.

Bill of Materials

Id	Description	Manufacturer	Part Number	Quantity
1	Red, 18 AWG, TXL, 19/30 Stranding	Prysmian	140586-91	137.42 in
2	Black, 18 AWG, TXL, 19/30 Stranding	Prysmian	140104-91	137.42 in
3	Metri-Pack 150 Connector, 2pos, Receptacle	Aptiv	12047663	1
4	Metri-Pack 150 Lock, For Receptacle Connector	Aptiv	12047665	1
5	Metri-Pack Contact, 18-16 AWG, Pin	Aptiv	12047581	2
6	Metri-Pack 150 Connector, 2pos, Plug	Aptiv	12047662	1
7	Metri-Pack 150 Lock, For Plug Connector	Aptiv	12047664	1
8	Metri-Pack 150 Contact, 18-16 AWG, Socket	Aptiv	12047767	2
9	Anti-Abrasion Wire Harness Tape, Black	Tesa	TS51036 1.	
10	Generic Heat Shrink Label		Label	1
11	Fir Tree Cable Tie, 8" Long, 1/4" Mount, Black	HellermannTyton	T50RTM250HSM4	5

Coverings

Id	Assembly
[9]	

Notes



C2 [6, 7, 8]

137 in [9]

63484

[10]

C1 [3, 4, 5]



From	To	Color	Size	From Contact PN
C2.A	C1.A		18 AWG	12047767
C2.B	C1.B		18 AWG	12047767

From	To	Color	Size	From Contact PN
C1.A	C2.A		18 AWG	12047581
C1.B	C2.B		18 AWG	12047581



[11]

Revisions

Rev.	Date	Author	Description
A	10/27/26	Andrew Oswalt	Initial Drawing

Initial ECN	24359	Drawn By	APO
Current ECN	24359	Weight (lb)	0.2
ECN Description		Sheet	1 of 1
RELEASE FOR PRODUCTION		Size	11" x 17"

Part Number 63484 Or P-HARRB4 Segment EAU

Description ROOF BOW HARNESS #4

All dimensions in inches unless otherwise specified.
Harness length tolerance = +/- 5%, max ≤ 5 in.
Loom/tape to connector gap = 1 in. +/- 10%
Wires in bundle length tolerance = +/- 5%, max ≤ 1 in.
Terminal wire strip length tolerances controlled by MFG.

ADRIAN

This document contains confidential and proprietary information that cannot be reproduced or divulged, in whole or in part, without written authorization.

PURCHASED COMPONENT KEY FEATURES

DESCRIPTION OF REQUIREMENTS
DIMENSIONAL REQUIREMENTS (AS SHOWN ON DRAWING) **N/A**
LOAD/RATING REQUIREMENT **N/A**
MATERIAL REQUIREMENT **N/A**
PACKAGING REQUIREMENT **N/A**
OTHER REQUIREMENTS **TIMER LIGHTING MODULE FOR INTERIOR PLUG AND PLAY LIGHTING ON TOPPERS**





THIS DRAWING IS THE PROPERTY OF ADRIAN STEEL COMPANY AND IS NOT TO BE USED IN ANY MANNER DETRIMENTAL TO THE INTERESTS OF ADRIAN STEEL COMPANY

PRINTED DOCUMENT IS UNCONTROLLED

TOLERANCES & INSPECTION

UNLESS OTHERWISE SPECIFIED

ALL BEND ANGLES ARE 90 DEGREES

ALL DIMENSIONS ARE IN INCHES.

REFERENCE DIMENSIONS (X.XXX) DO NOT REQUIRE INSPECTION

FEATURES	HOLES/SLOTS	ANGLES
0.0 = ± .125	0.0 = ± .062	0° = ± 2°
0.00 = ± .062	0.00 = ± .031	0.0° = ± 1°
0.000 = ± .031	0.000 = ± .015	

Material Thickness: per ASTM Std.
Weld Callouts per AWS

RELEASE & REVISIONS

INITIAL ECN: **26830**

CURRENT ECN: **27950**

ECN DESCRIPTION:

Update to REV B

REVISED BY: **JJC**

PURCHASED COMPONENT

REFERENCED SUPPLIER AND/OR MANUFACTURER
Stinger

REFERENCED SUPPLIER AND/OR MANUFACTURER PART NUMBER
71902

COLOR (ONLY LIST IF COLOR SPECIFIC)

COMODITY ITEM (Y/N) (YES = ALL DIMENSIONS AND NOTES ARE REFERANCE)
(NOTE: DIMENSIONS AND FEATURES MAY VARY FOR A COMODITY ITEM.)
NO

PART / PRODUCT IDENTIFICATION

ADRIAN STEEL®

ADRIAN STEEL COMPANY
906 JAMES STREET, ADRIAN, MI 49221

REVISION LEVEL **B**

MAT'L USED: **PURCHASED**

DESIGNED BY: **E.BURKE**

DESCRIPTION: **TIMER LIGHTING MODULE**

WEIGHT (Lbs.): **0.2**

SEGMENT CODE: **ELE**

PART NUMBER: **71902**







TLM

Timer/Low Voltage Module

INSTALLATION MANUAL

Thank you for purchasing the TLM

WHAT'S INCLUDED:

- Timer/Low Voltage Module
- Module Harness
- Cable Ties

COMPATIBLE ACCESSORIES:

- Vehicle-specific harness (P-VTM-xxx)
- Switch harness (VTM-SWx)
- High current harness (VTM-RLY)

FEATURES:

- Selectable timer durations - 30, 60, 90, and 120 minutes
- Selectable Low Voltage Sense shut off - 11.8V, 11.5V, and 11.2V
- Timer and Low Voltage sense work independently of each other
- Inputs for 2 momentary switches or a steady ground input
- 10A max current output

OPERATING INSTRUCTIONS:

DIP 1	DIP 2	V-Sense	DIP 3	DIP 4	DIP 5	Minutes	DIP 6
Up	Up	OFF	Timer	Up	Up	30	ON (Down) Steady Ground Input
Up	Down	11.2V	ON (Down)	Up	Down	60	
Down	Up	11.5V	OFF (Up)	Down	Up	90	OFF (Up) Momentary Ground Input
Down	Down	11.8V		Down	Down	120	

DIP 1-2
If Voltage Sense feature is turned ON, low voltage shut down will occur when the input voltage to the TLM module drops below the V-Sense setting. To eliminate false triggers, there is a 20 second delay before shut down.
If Voltage Sense is turned OFF, input voltage level will not be monitored.

NOTE: Voltage Sense takes precedence over Timer.

DIP 3
If the Timer feature is turned ON and switch input is activated, output voltage will be provided for specified timer duration.

DIP 4-5
Switch settings will determine how long output will be active after the switch input is activated.

NOTE: If an invalid time is selected (e.g. Up, Up, Up or Down, Down, Down) the output will turn off 10 seconds after the switch input is activated.

DIP 6
Steady Ground Input Applications:
Applying ground to the switch input will activate the output, removing ground from switch input will disable the output. If ground is applied once again, the output will be re-activated, and the timer will reset/start over.

Momentary Ground Input Applications:
Applying a pulsed ground to the switch input will activate the output, a seond pulsed ground to the switch input will disable the output. If a pulsed ground is applied once again, the output will be re-activated, and the timer will reset/start over.

Steady Ground Input Applications

Trigger Input	Switch Input	Output	Voltage Sense (ON)	Timer (ON)
Active	N/A	ON	Monitoring Input Voltage	N/A
Not Active	N/A	OFF	N/A	N/A
Not Active	Activated (Input Grounded)	ON	Monitoring Input Voltage	Timer Starts
Not Active	Deactivated (Ground Removed)	OFF	N/A	Timer Off
Not Active	Activated (Input Grounded)	ON	Monitoring Input Voltage	Timer Starts

Momentary Ground Input Applications

Trigger Input	Switch Input	Output	Voltage Sense (ON)	Timer (ON)
Active	N/A	ON	Monitoring Input Voltage	N/A
Not Active	N/A	OFF	N/A	N/A
Not Active	Activated (Pulsed)	ON	Monitoring Input Voltage	Timer Starts
Not Active	Activated (Pulsed)	OFF	N/A	Timer Off
Not Active	Activated (Pulsed)	ON	Monitoring Input Voltage	Timer Starts

In the tables above "Trigger Input" refers to the Positive Trigger Input and Negative Trigger Input of the module.

If a Trigger Input is active, its function takes precedence. Attempting to activate the Switch Input while a Trigger Input is active will have no effect on the modules output.

WIRING DIAGRAMS:

TLM Harness

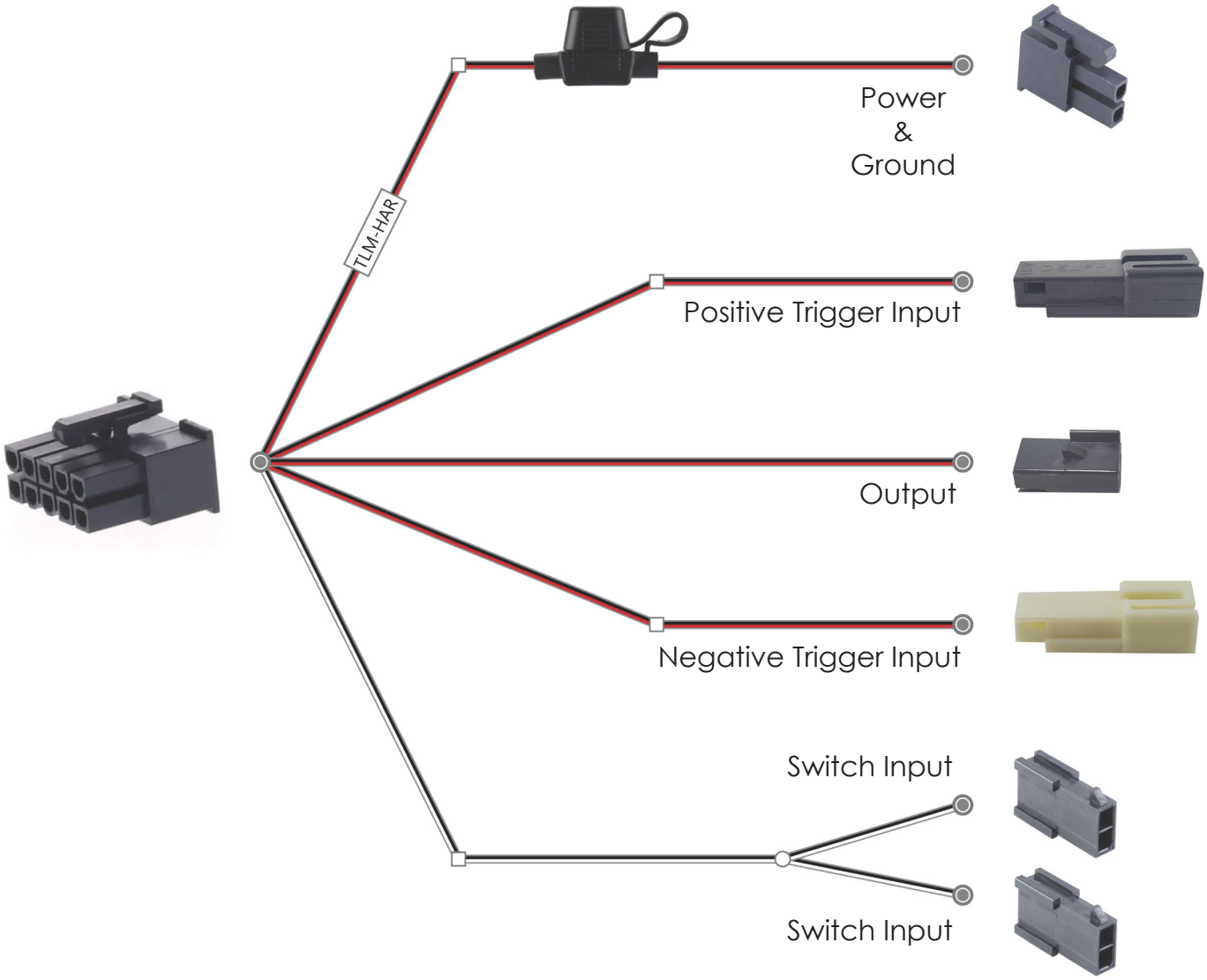

If necessary, connectors may be removed for hardwire applications.

Positive Trigger Input: Applying 12V to Red wire will activate output
Negative Trigger Input: Applying ground to Black wire will activate output
Switch Input: Closing loop between switch input wire leads will activate output

VTM-RLY (Optional Harness)

For larger current demands, use the optional VTM-RLY and connect to power and ground, along with the TLM harness. VTM-RLY supports up to 15A.

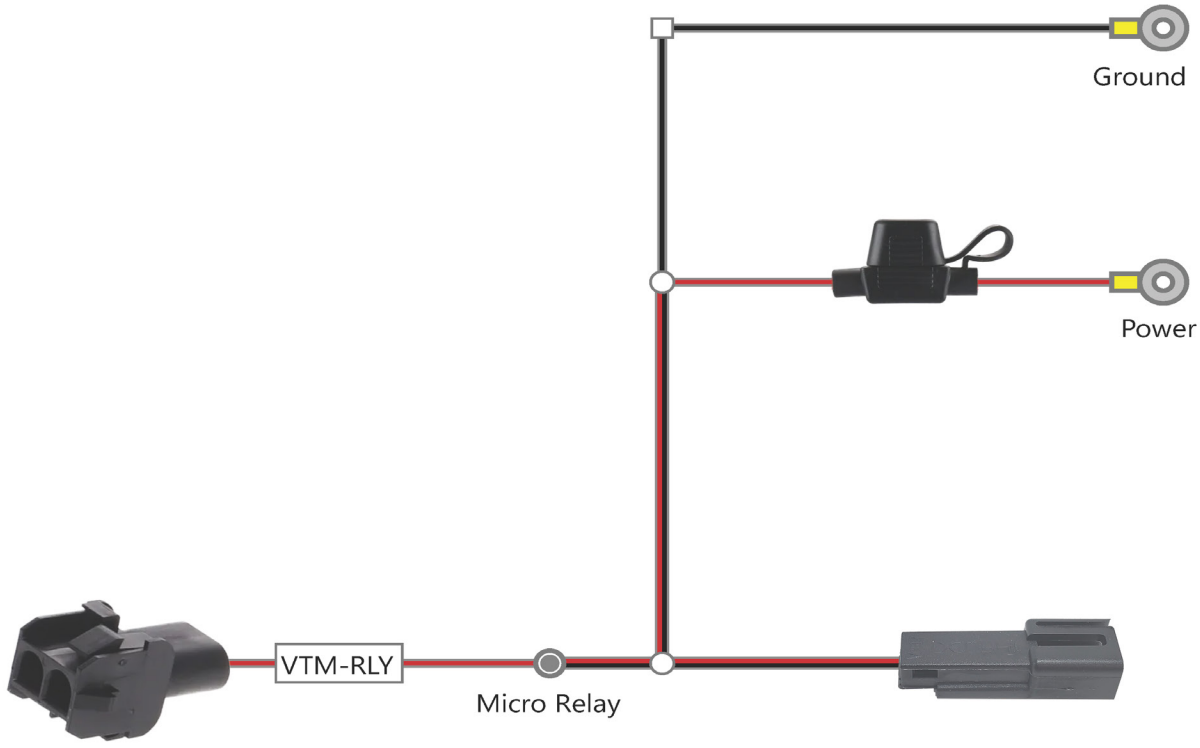

VTM-RLY Output connects to P-VTMxxx harness for vehicle lighting

VTM-RLY Input connects to the output from the TLM harness

Troubleshooting Table:

Output does not activate when Positive or Negative Trigger Input is activated	Check fuse on TLM harness	Replace fuse if it is bad
	Check power and ground connections	Fix loose or bad wire connection
	Confirm module has power and ground at its input	Replace module or damaged harness if necessary
Output does not activate when Switch Input is activated	Confirm DIP 6 on module matches switch type being used	Change DIP 6 setting to match switch type
	Confirm switch being used is not defective	Replace bad switch if necessary
Switch Input - Irregular behavior	Output does not turn off with switch	Check DIP 6 and confirm it matches switch type
		Confirm switch is not damaged or defective; replace if necessary
	Output activates for 5 seconds then turns off	Input voltage to module is below Voltage Sense setting



Phone – 866-931-8021 (option 3)

E-Mail – support@stingersolutions.com

StingerSolutions.com

REV. B

PURCHASED COMPONENT KEY FEATURES

DESCRIPTION OF REQUIREMENTS
DIMENSIONAL REQUIREMENTS (AS SHOWN ON DRAWING) **N/A**
LOAD/RATING REQUIREMENT **N/A**
MATERIAL REQUIREMENT **N/A**
PACKAGING REQUIREMENT **N/A**
OTHER REQUIREMENTS **10 foot power harness for the TLM**

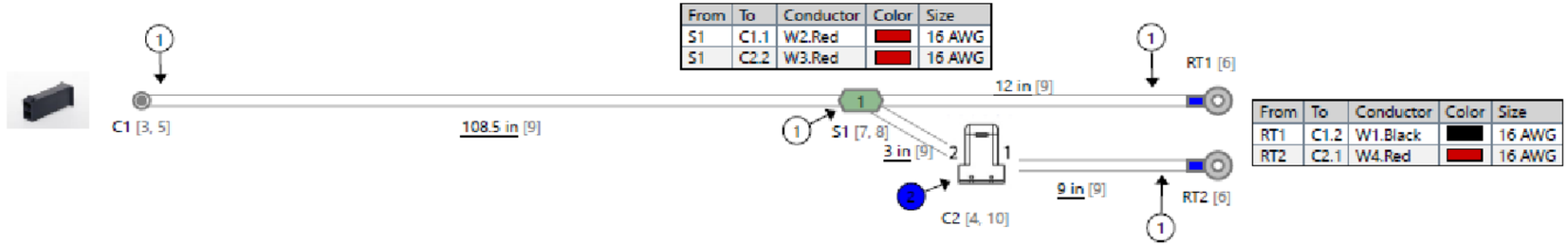

From	To	Conductor	Color	Size
S1	C1.1	W2.Red		16 AWG
S1	C2.2	W3.Red		16 AWG

From	To	Conductor	Color	Size
RT1	C1.2	W1.Black		16 AWG
RT2	C2.1	W4.Red		16 AWG

From	To	Conductor	Color	Size	From Contact PN
C2.1	RT2	W4.Red		16 AWG	
C2.2	S1	W3.Red		16 AWG	

THIS DRAWING IS THE PROPERTY OF ADRIAN STEEL COMPANY AND IS NOT TO BE USED IN ANY MANNER DETRIMENTAL TO THE INTERESTS OF ADRIAN STEEL COMPANY

PRINTED DOCUMENT IS UNCONTROLLED

TOLERANCES & INSPECTION

UNLESS OTHERWISE SPECIFIED

ALL BEND ANGLES ARE 90 DEGREES

ALL DIMENSIONS ARE IN INCHES.

REFERENCE DIMENSIONS (X.XXX) DO NOT REQUIRE INSPECTION

FEATURES	HOLES/SLOTS	ANGLES
0.0 = ± .125	0.0 = ± .062	0° = ± 2°
0.00 = ± .062	0.00 = ± .031	0.0° = ± 1°
0.000 = ± .031	0.000 = ± .015	

Material Thickness: per ASTM Std.
Weld Callouts per AWS

RELEASE & REVISIONS

INITIAL ECN: **28473**

CURRENT ECN: **28473**

ECN DESCRIPTION:
Release

REVISED BY: **LJK**

PURCHASED COMPONENT

REFERENCED SUPPLIER AND/OR MANUFACTURER
Stinger

REFERENCED SUPPLIER AND/OR MANUFACTURER PART NUMBER
76163

COLOR (ONLY LIST IF COLOR SPECIFIC)

COMMODITY ITEM (Y/N) (YES = ALL DIMENSIONS AND NOTES ARE REFERANCE)
(NOTE: DIMENSIONS AND FEATURES MAY VARY FOR A COMODITY ITEM.)
No

PART / PRODUCT IDENTIFICATION

ADRIAN STEEL®

ADRIAN STEEL COMPANY
906 JAMES STREET, ADRIAN, MI 49221

REVISION LEVEL **A**

MAT'L USED: **PURCHASED**

DESIGNED BY: **JWS**

DESCRIPTION: **HARN, PWR TLM BATTERY 10'**

WEIGHT (Lbs.): **.20**

SEGMENT CODE: **ELE**

PART NUMBER: **76163**

PURCHASED COMPONENT KEY FEATURES

DESCRIPTION OF REQUIREMENTS
DIMENSIONAL REQUIREMENTS (AS SHOWN ON DRAWING) **N/A**
LOAD/RATING REQUIREMENT **N/A**
MATERIAL REQUIREMENT **N/A**
PACKAGING REQUIREMENT **N/A**
OTHER REQUIREMENTS **USED FOR THE SMALL SLIDE OUT** **QUICK CONNECTS ARE FOR INLINE SWITCH THAT CONTROLS LED LIGHT ON THE SLIDE OUT. LED LIGHT CONNECTION IS MADE WITH BUTT CONNECTORS.**

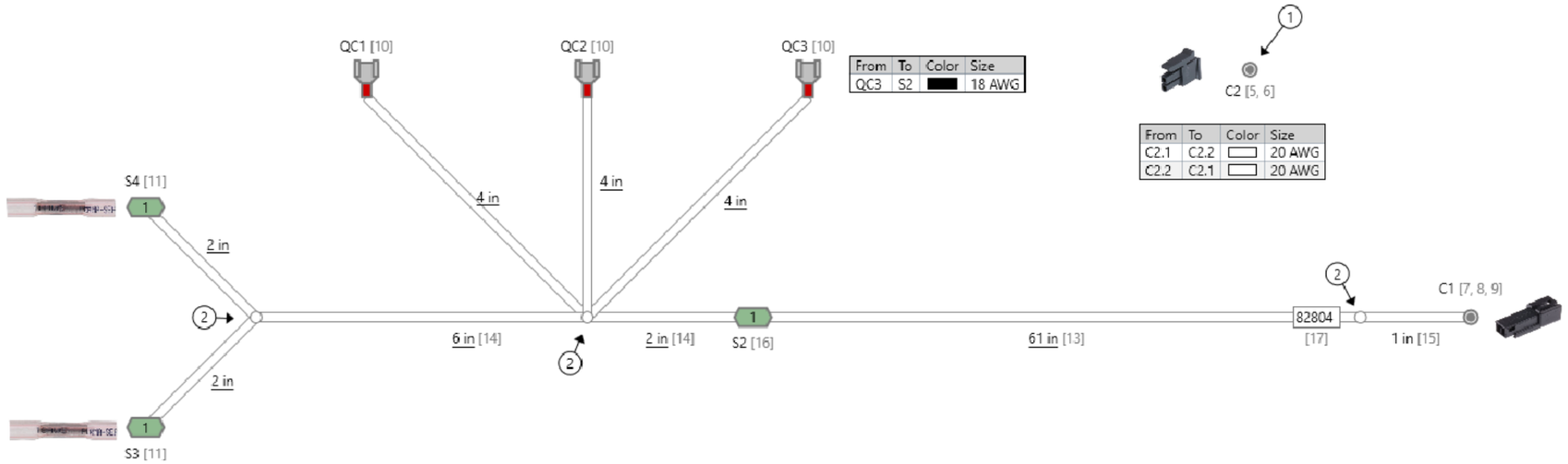

THIS DRAWING IS THE PROPERTY OF ADRIAN STEEL COMPANY AND IS NOT TO BE USED IN ANY MANNER DETRIMENTAL TO THE INTERESTS OF ADRIAN STEEL COMPANY

PRINTED DOCUMENT IS UNCONTROLLED

TOLERANCES & INSPECTION

UNLESS OTHERWISE SPECIFIED

ALL BEND ANGLES ARE 90 DEGREES

ALL DIMENSIONS ARE IN INCHES.

REFERENCE DIMENSIONS (X.XXX) DO NOT REQUIRE INSPECTION

FEATURES	HOLES/SLOTS	ANGLES
0.0 = ± .125	0.0 = ± .062	0° = ± 2°
0.00 = ± .062	0.00 = ± .031	0.0° = ± 1°
0.000 = ± .031	0.000 = ± .015	

Material Thickness: per ASTM Std.
Weld Callouts per AWS

RELEASE & REVISIONS

INITIAL ECN: **29900**

CURRENT ECN: **29900**

ECN DESCRIPTION:

RELEASE FOR MARKET FILL

REVISED BY: **LJK**

PURCHASED COMPONENT

REFERENCED SUPPLIER AND/OR MANUFACTURER
ADRIAN

REFERENCED SUPPLIER AND/OR MANUFACTURER PART NUMBER
82804

COLOR (ONLY LIST IF COLOR SPECIFIC)

COMMODITY ITEM (Y/N) (YES = ALL DIMENSIONS AND NOTES ARE REFERANCE) (NOTE: DIMENSIONS AND FEATURES MAY VARY FOR A COMODITY ITEM.)
NO

PART / PRODUCT IDENTIFICATION

ADRIAN STEEL®

ADRIAN STEEL COMPANY
906 JAMES STREET, ADRIAN, MI 49221

REVISION LEVEL **A**

MAT'L USED:

DESIGNED BY: **L. KALENIECKI**

DESCRIPTION: **HARN,LGHT SMALL SLIDEOUT**

WEIGHT (Lbs.): **1.0**

SEGMENT CODE: **EAU**

PART NUMBER: **82804**

Bill of Materials

Id	IPN	Description	Manufacturer	Part Number	Quantity
1	82494	Red, 18 AWG, TXL, 19/30 Stranding	Prysmian	140586-91	68 in
2	82495	Black, 18 AWG, TXL, 19/30 Stranding	Prysmian	140104-91	78.63 in
3		White, 18 AWG, TXL, 19/30 Stranding	Prysmian	140108-91	12.63 in
4		White, 20 AWG, TXL, 7/28 Stranding	Prysmian	140879-91W	4 in
5		Micro-Fit 3.0 Connector, 2pos, Receptacle	Molex	43025-0210	1
6		Micro-Fit 3.0 Contact, 20-24 AWG, Socket	Molex	430300001	2
7		Metri-Pack 150 Connector, 2pos, Receptacle	Aptiv	12047663	1
8		Metri-Pack Contact, 18-16 AWG, Pin	Aptiv	12047581	2
9		Metri-Pack 150 Lock, For Receptacle Connector	Aptiv	12047665	1
10	82690	Quick Connect, 22-18 Ga., .187" x .020", Red	Waytek	30729	3
11		Heat Shrink Butt Splice, 22-18 AWG	Molex	19164-0013	2
13	16347-0	Corrugated Loom, Split Nylon, .250" ID, Black w/ Gray Stripe	Drossbach	014NPBSG BLACK/GRAY	61 in
14	20362-0	Corrugated Loom, Split Nylon, .350" ID, Black w/ Gray Stripe	Drossbach	038NPBSG0000XZS	8 in
15	81685	Anti-Abrasion Wire Harness Tape, Black	Tesa	TS51036 1.	
16	81536	Heat Shrink Butt Splice, 20-18 to 16-14 Ga.	NSPA	KS56-16	1
17		Generic Heat Shrink Label		Label	1

Coverings

Id	Assembly
[13]	
[14]	
[15]	

Notes

1. Jumper From Pin 1 to Pin 2, Use Roughly 4 in of wire.
2. Lock tape loom with Tesa 51036

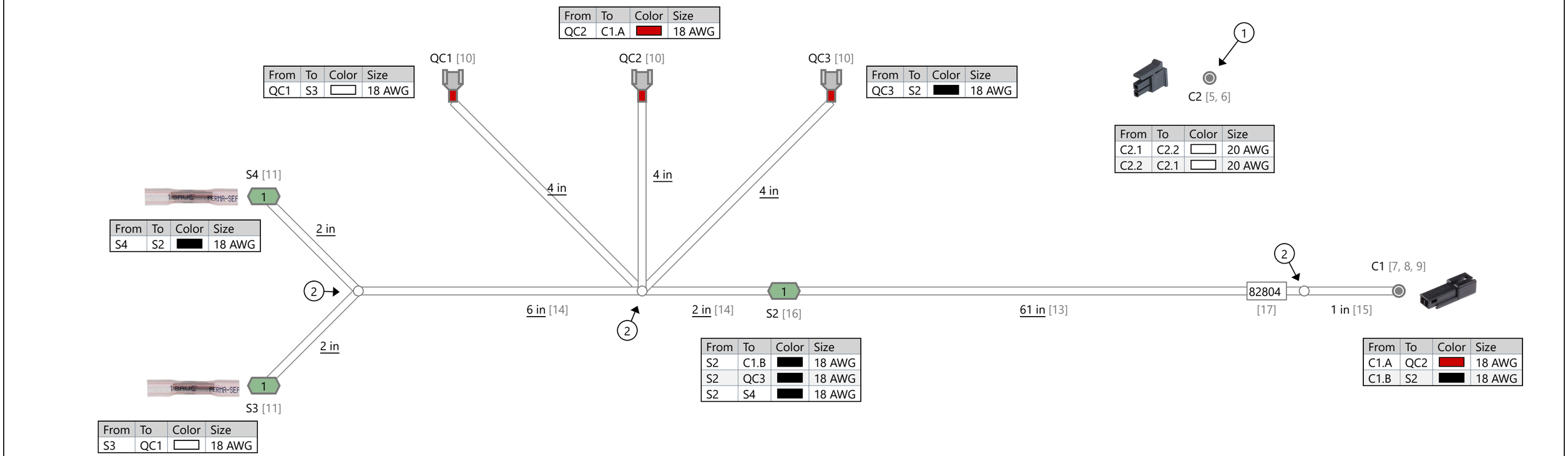

Revisions

Rev.	Date	Author	Description
A	9/24/2026	Luke Kaleniecki	Initial Drawing

Initial ECN	29900	Drawn By	L. Kaleniecki
Current ECN	29900	Weight (lb)	1.0
ECN Description	RELEASE FOR PRODUCTION	Sheet	1 of 1
		Size	11" x 17"

Part Number: 82804 | Segment: ELE

Description: HARN,LGHT SMALL SLIDEOUT

All dimensions in inches unless otherwise specified.
Harness length tolerance = +/- 5%, max ≤ 5 in.
Loom/tape to connector gap = 1 in. +/- 10%
Wires in bundle length tolerance = +/- 5%, max ≤ 1 in.
Terminal wire strip length tolerances controlled by MFG.

ADRIAN

This document contains confidential and proprietary information that cannot be reproduced or divulged, in whole or in part, without written authorization.

Title:	----
Part Number:	82804
Description:	HARN,LGHT SMALL SLIDEOUT

Rev.	Date	Author	Description
A	9/24/2026	Luke Kaleniecki	Initial Drawing

Title:	----
Part Number:	82804
Description:	HARN,LGHT SMALL SLIDEOUT

Flag	Quantity	Note
1	1	Jumper From Pin 1 to Pin 2, Use Roughly 4 in of wire.
2	3	Lock tape loom with Tesa 51036

Title:	----
Part Number:	82804
Description:	HARN,LGHT SMALL SLIDEOUT

Id	Description	Manufacturer	Part Number	IPN	Quantity	Usage
1	Red, 18 AWG, TXL, 19/30 Stranding	Prysmian	140586-91	82494	68 in	W1
2	Black, 18 AWG, TXL, 19/30 Stranding	Prysmian	140104-91	82495	78.63 in	W2, W3, W4
3	White, 18 AWG, TXL, 19/30 Stranding	Prysmian	140108-91		12.63 in	W6
4	White, 20 AWG, TXL, 7/28 Stranding	Prysmian	140879-91W		4 in	W5
5	Micro-Fit 3.0 Connector, 2pos, Receptacle	Molex	43025-0210		1	C2
6	Micro-Fit 3.0 Contact, 20-24 AWG, Socket	Molex	430300001		2	See Wiring Table
7	Metri-Pack 150 Connector, 2pos, Receptacle	Aptiv	12047663		1	C1
8	Metri-Pack Contact, 18-16 AWG, Pin	Aptiv	12047581		2	See Wiring Table
9	Metri-Pack 150 Lock, For Receptacle Connector	Aptiv	12047665		1	C1
10	Quick Connect, 22-18 Ga., .187" x .020", Red	Waytek	30729	82690	3	QC1, QC2, QC3
11	Heat Shrink Butt Splice, 22-18 AWG	Molex	19164-0013		2	S3, S4
13	Corrugated Loom, Split Nylon, .250" ID, Black w/ Gray Stripe	Drossbach	014NPBSG BLACK/GRAY	16347-0	61 in	See Drawing
14	Corrugated Loom, Split Nylon, .350" ID, Black w/ Gray Stripe	Drossbach	038NPBSG0000XZS	20362-0	8 in	See Drawing
15	Anti-Abrasion Wire Harness Tape, Black	Tesa	TS51036 1.	81685		See Drawing
16	Heat Shrink Butt Splice, 20-18 to 16-14 Ga.	NSPA	KS56-16	81536	1	S2
17	Generic Heat Shrink Label		Label		1	See Drawing

Title:	----
Part Number:	82804
Description:	HARN,LGHT SMALL SLIDEOUT

Id	Type	Manufacturer	Part Number	IPN	Description	Usage

Title:	----
Part Number:	82804
Description:	HARN,LGHT SMALL SLIDEOUT

From	To	Conductor	Conductor PN	Twisted With	Size	Length	From Contact PN	Notes
C1.A	QC2	W1.Red	140586-91		18 AWG	68 in	12047581	
C1.B	S2	W2.Black	140104-91		18 AWG	62 in	12047581	
C2.1	C2.2	W5.White	140879-91W		20 AWG	0 in	430300001	
QC1	S3	W6.White	140108-91		18 AWG	12.63 in		
S2	QC3	W3.Black	140104-91		18 AWG	6.38 in		
S4	S2	W4.Black	140104-91		18 AWG	10.25 in		

Title:	----
Part Number:	82804
Description:	HARN,LGHT SMALL SLIDEOUT

#	Type	Reference Designator	Manufacturer	Part Number	Color	Size	From Strip	To Strip	Length	Twisted With	Notes
1	Wire	W1	Prysmian	140586-91	Red	18 AWG	0.21 in	0.375 in	68 in		
2	Wire	W2	Prysmian	140104-91	Black	18 AWG	0.21 in	0.25 in	62 in		
3	Wire	W3	Prysmian	140104-91	Black	18 AWG	0.25 in	0.375 in	6.38 in		
4	Wire	W4	Prysmian	140104-91	Black	18 AWG	0.25 in	0.25 in	10.25 in		
5	Wire	W5	Prysmian	140879-91W	White	20 AWG	0.13 in	0.13 in	0 in		
6	Wire	W6	Prysmian	140108-91	White	18 AWG	0.375 in	0.25 in	12.63 in		

Title:	----
Part Number:	82804
Description:	HARN,LGHT SMALL SLIDEOUT

#	Manufacturer	Part Number	Description	Label Text
1		Label	Generic Heat Shrink Label	82804

PURCHASED COMPONENT KEY FEATURES

DESCRIPTION OF REQUIREMENTS
DIMENSIONAL REQUIREMENTS (AS SHOWN ON DRAWING) **N/A**
LOAD/RATING REQUIREMENT **N/A**
MATERIAL REQUIREMENT **N/A**
PACKAGING REQUIREMENT **N/A**
OTHER REQUIREMENTS **6 LED Light Version** **12" Pigtail** **900 Lumens** **LED Color: White** **Surface Mount**



THIS DRAWING IS THE PROPERTY OF ADRIAN STEEL COMPANY AND IS NOT TO BE USED IN ANY MANNER DETRIMENTAL TO THE INTERESTS OF ADRIAN STEEL COMPANY

PRINTED DOCUMENT IS UNCONTROLLED

TOLERANCES & INSPECTION

UNLESS OTHERWISE SPECIFIED

ALL BEND ANGLES ARE 90 DEGREES

ALL DIMENSIONS ARE IN INCHES.

REFERENCE DIMENSIONS (X.XXX) DO NOT REQUIRE INSPECTION

FEATURES	HOLES/SLOTS	ANGLES
0.0 = ± .125	0.0 = ± .062	0° = ± 2°
0.00 = ± .062	0.00 = ± .031	0.0° = ± 1°
0.000 = ± .031	0.000 = ± .015	

Material Thickness: per ASTM Std.
Weld Callouts per AWS

RELEASE & REVISIONS

INITIAL ECN: **29925**

CURRENT ECN: **29925**

ECN DESCRIPTION:
Release for Market Fill

REVISED BY: **n/a**

PURCHASED COMPONENT

REFERENCED SUPPLIER AND/OR MANUFACTURER
Techniq

REFERENCED SUPPLIER AND/OR MANUFACTURER PART NUMBER
M30-WB060-1

COLOR (ONLY LIST IF COLOR SPECIFIC)

COMMODITY ITEM (Y/N) (YES = ALL DIMENSIONS AND NOTES ARE REFERANCE)
(NOTE: DIMENSIONS AND FEATURES MAY VARY FOR A COMODITY ITEM.)
No

PART / PRODUCT IDENTIFICATION

ADRIAN STEEL®

ADRIAN STEEL COMPANY
906 JAMES STREET, ADRIAN, MI 49221

REVISION LEVEL **A**

MAT'L USED: **Purchased**

DESIGNED BY: **L. Kaleniecki**

DESCRIPTION: **TECHNIQ 6 LED M30 LIGHT**

WEIGHT (Lbs.): **1.0**

SEGMENT CODE: **ELE**

PART NUMBER: **83066**

PURCHASED COMPONENT KEY FEATURES

DESCRIPTION OF REQUIREMENTS
DIMENSIONAL REQUIREMENTS (AS SHOWN ON DRAWING) **N/A**
LOAD/RATING REQUIREMENT **N/A**
MATERIAL REQUIREMENT **N/A**
PACKAGING REQUIREMENT **N/A**
OTHER REQUIREMENTS **ILLUMINATED SWITCH (RED)** **20A 14VDC** **QUICK CONNECT TERMINALS - 0.19"** **CUT OUT PLACED ON THE LEFT SIDE OF THE SWITCH SO ON IS TOP OF SWITCH AND OFF IS BOTTOM.**



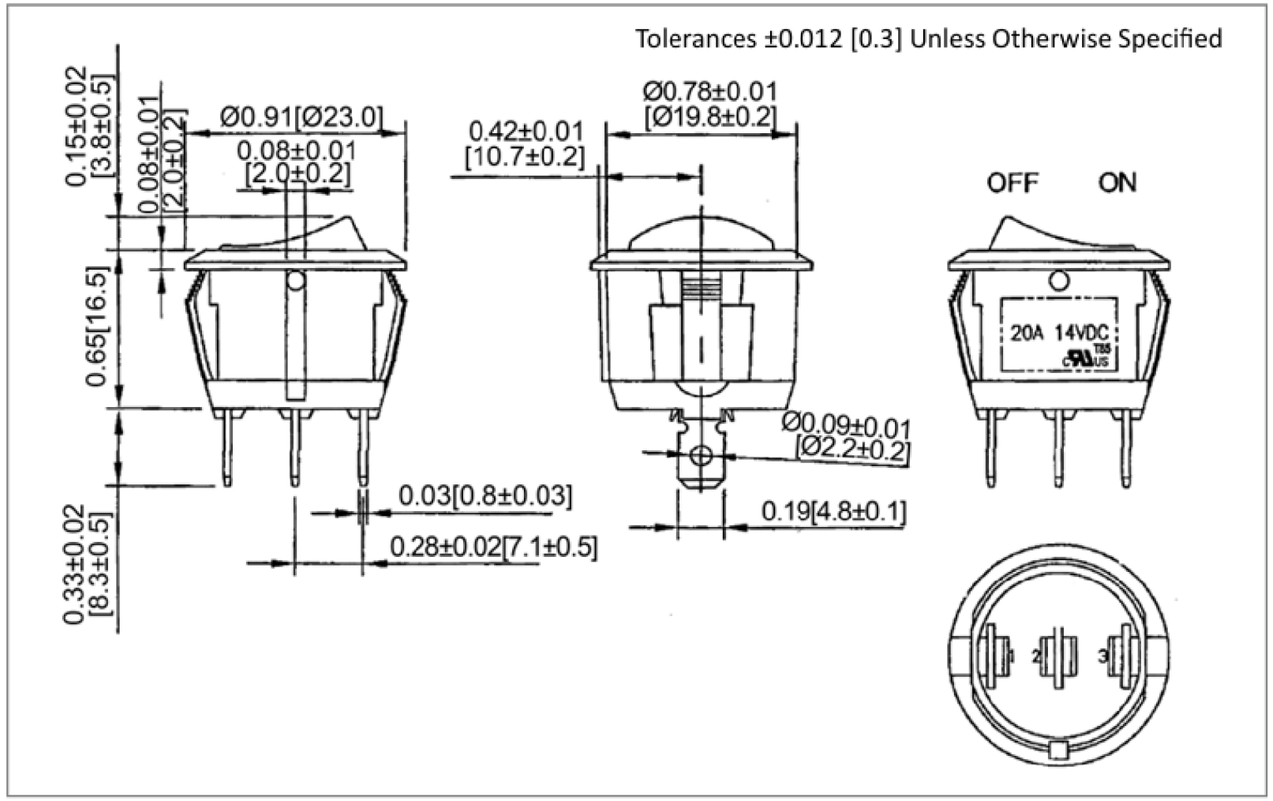

Mounting Hole

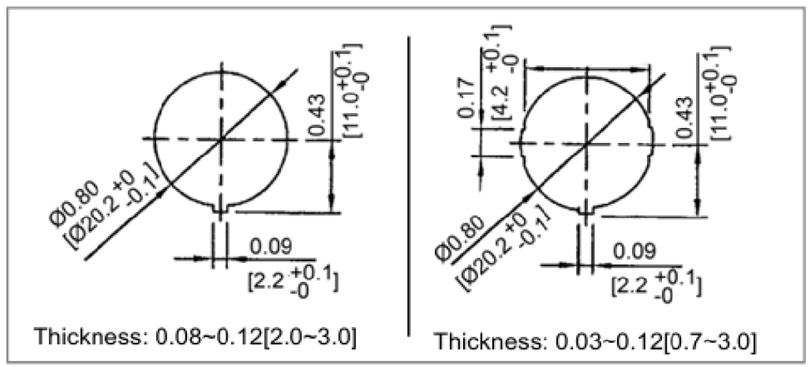

Circuit Diagram

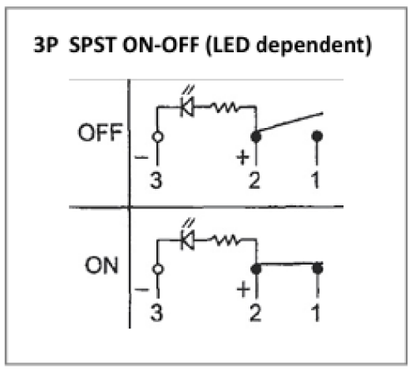

THIS DRAWING IS THE PROPERTY OF ADRIAN STEEL COMPANY AND IS NOT TO BE USED IN ANY MANNER DETRIMENTAL TO THE INTERESTS OF ADRIAN STEEL COMPANY

PRINTED DOCUMENT IS UNCONTROLLED

TOLERANCES & INSPECTION

UNLESS OTHERWISE SPECIFIED

ALL BEND ANGLES ARE 90 DEGREES

ALL DIMENSIONS ARE IN INCHES.

REFERENCE DIMENSIONS (X.XXX) DO NOT REQUIRE INSPECTION

FEATURES	HOLES/SLOTS	ANGLES
0.0 = ± .125	0.0 = ± .062	0° = ± 2°
0.00 = ± .062	0.00 = ± .031	0.0° = ± 1°
0.000 = ± .031	0.000 = ± .015	

Material Thickness: per ASTM Std.
Weld Callouts per AWS

RELEASE & REVISIONS

INITIAL ECN: 29900

CURRENT ECN: 29900

ECN DESCRIPTION:

RELEASE

REVISED BY: **LJK**

PURCHASED COMPONENT

REFERENCED SUPPLIER AND/OR MANUFACTURER
SWITCH COMPONENTS

REFERENCED SUPPLIER AND/OR MANUFACTURER PART NUMBER
RA1-1A-DC-2-RL

COLOR (ONLY LIST IF COLOR SPECIFIC)

COMMODITY ITEM (Y/N) (YES = ALL DIMENSIONS AND NOTES ARE REFERANCE)
(NOTE: DIMENSIONS AND FEATURES MAY VARY FOR A COMODITY ITEM.)
NO

PART / PRODUCT IDENTIFICATION

ADRIAN STEEL®

ADRIAN STEEL COMPANY
906 JAMES STREET, ADRIAN, MI 49221

REVISION LEVEL **A**

MAT'L USED: **PURCHASED**

DESIGNED BY: **L. KALENIECKI**

DESCRIPTION: **RED ILLUM ROCKER SWITCH**

WEIGHT (Lbs.): **0.1**

SEGMENT CODE: **ELE**

PART NUMBER: **83366**