## Introduction / Comments:

Install Instructions For Exterior Plug & Play Lights For Chevy Trax

### Note:

Read all instructions prior to installation. Review the Adrian Steel **GENERAL PRECAUTIONS PAGES (56638**) before attempting installation. Only personnel familiar with using electrical best practices should perform this install. Reference **ELECTRICAL BEST PRACTICES MANUAL (54479)** before attempting installation.

# Installation Instructions For Exterior Plug And Play Lights For Chevy Trax

# Table of Contents:

Overall Harness Diagram……..3

Tools needed……...3

Harnesses/Components Needed (If Applicable)……4

Component Placements……5

Overall Harness Routing……6-7

Beginning Install……8

Strobe Installation Instructions……11

Beacon/Lightbar Installation Instructions……...…17

*****TORQUE*****
**Torque all strobe fasteners to 10 in-lbs.**
**DO NOT OVER TIGHTEN**

**DO NOT MOUNT ON A CURVED SURFACE**

## **Please read statement below before moving forward**

**Before installation, disconnect the OEM negative battery cable.**

These plug and play kits are completely modular and can be configured in many different ways. Placement of lights will be determined by sales order drawings/customer ask. Therefore, these instructions are for the most standard configurations, and for reference only.

Please reference the order drawing and spec sheet to see what components are going to be installed on this particular upfit.

**These installation instructions are for most cases and for reference. Not all installs will have strobes, beacons, and lightbars. Reference the instructions for only what you are installing.**

# Overall Harness Diagram

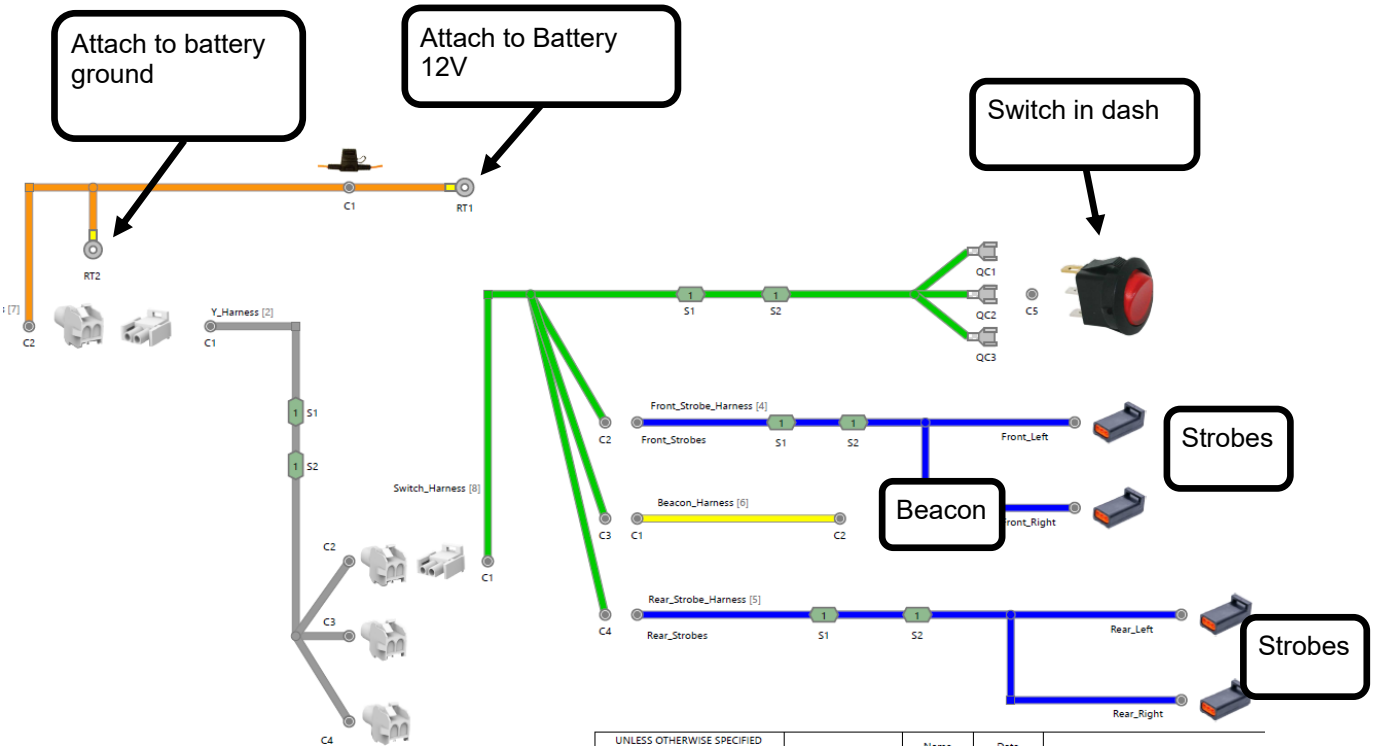


# Tools required:

13 socket and 20 torx bit

Phillips bit and 5/16” step drill bit

Power drill and impact

Torque wrench

# Components

| | Part Number | Description |
|---|---|---|
| 1 | 67093 | Power Harness #2 |
| 2 | 67097 | Switch Harness #1 |
| 3 | 67102 | Front Strobe Harness #2 (If Applicable) |
| 4 | 67106 | Rear Strobe Harness #1 (If Applicable) |
| 5 | 67112 | Beacon/Lightbar Harness #1 (If Applicable) |
| 6 | 67686 or 67687 | Strobes (If Applicable) |
| 7 | 67689 or 67691 | Beacon/Lightbar (If Applicable) |
| 8 | 80681 | Beacon Mount (If Applicable) |

**The purpose of plug and play lighting is to be completely modular. Due to this feature, refer to the order drawing for all exact lighting placements. These installation instructions are for most cases and for reference. Not all installs will have strobes, beacons, and lightbars. Reference the instructions for only what you are installing.**

**Harness pictures are for reference only.**

# Placements

Switch placement: Dash panel under headlight buttons

Front Strobes: Grill Example

*****TORQUE STROBES TO 10-IN-LB'S MAXIMUM*****

Mounted Beacon w/ Acari Mount

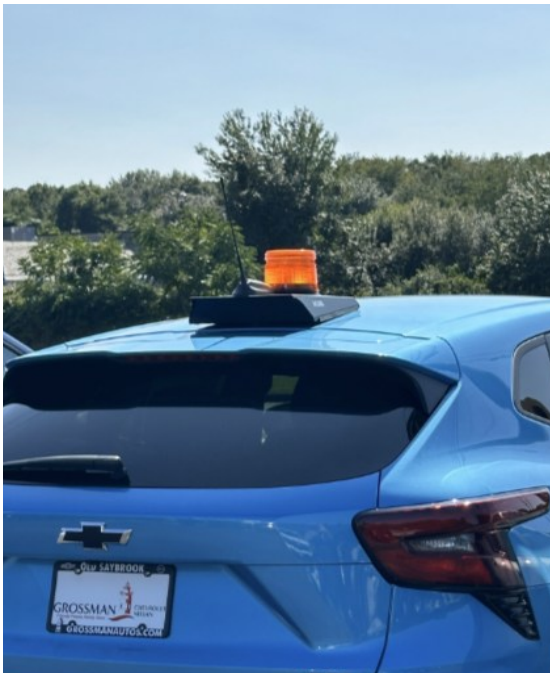

# Routing Overview

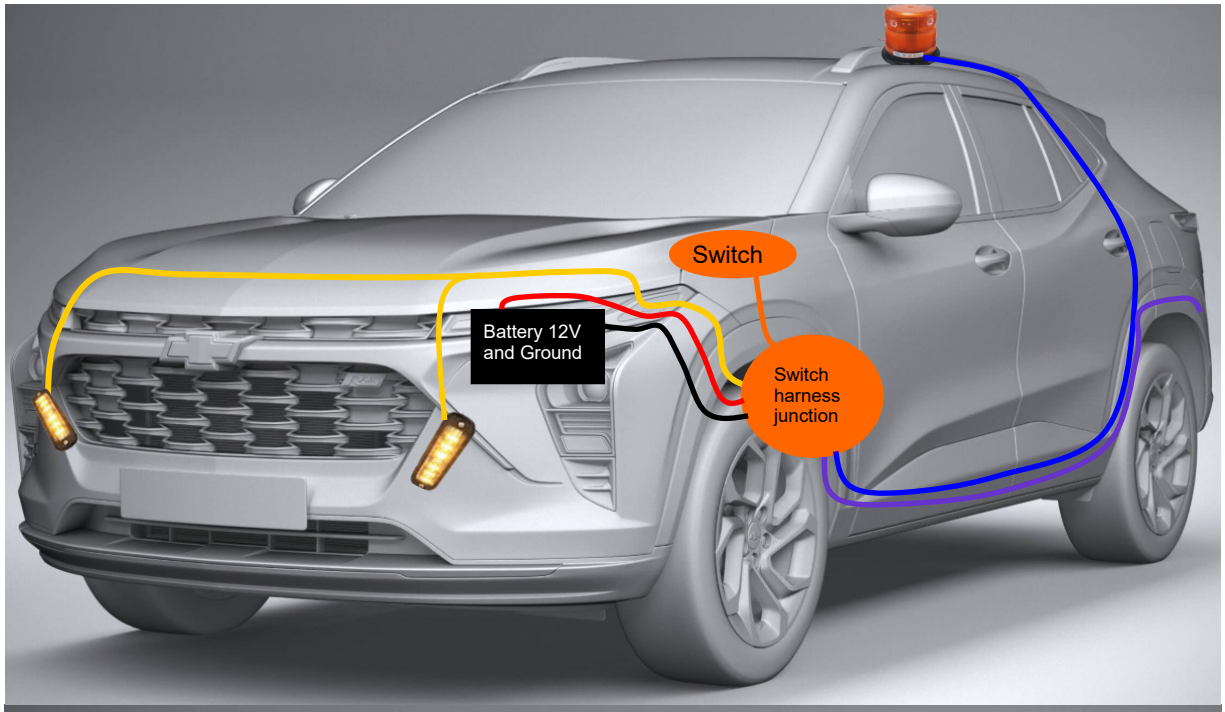


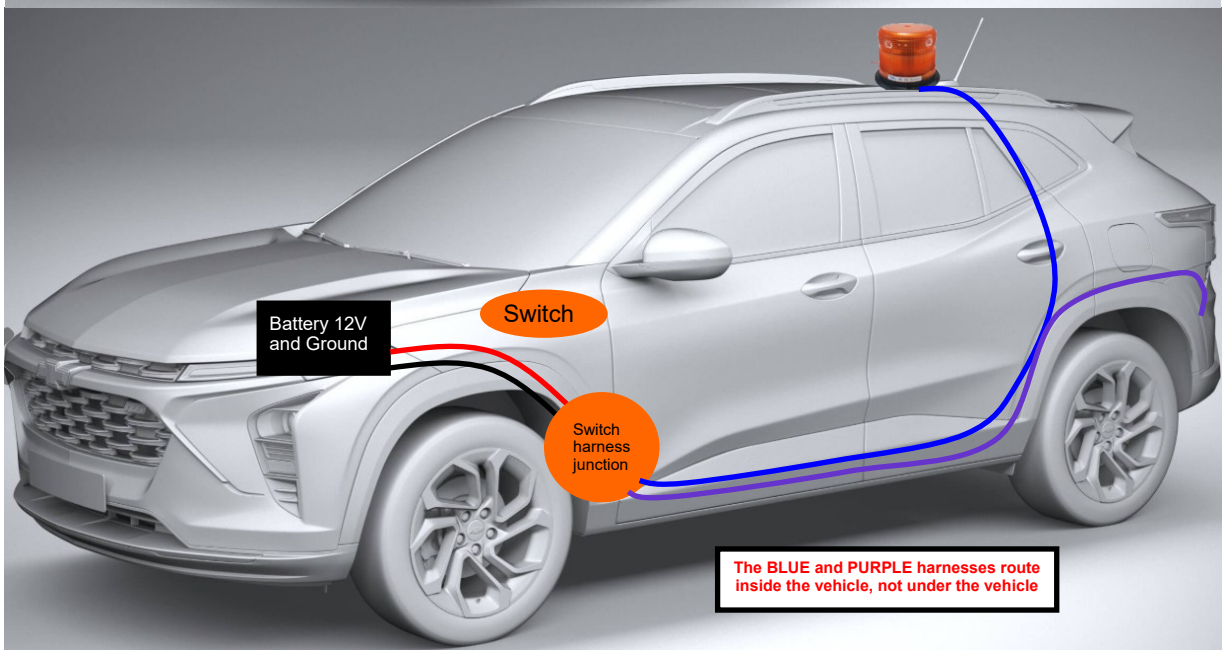


| Color | Key - Items |
|---|---|
| Yellow | Strobes - Front strobe harness #2 |
| Red/Black | Power harness: Battery to kick panel |
| Orange | Switch harness: Switch in dash |
| Blue | Beacon harness: Switch to beacon |
| Purple | Strobes - Rear strobe harness #1 |

# Overview of Routing: Beacon Wire Harness:

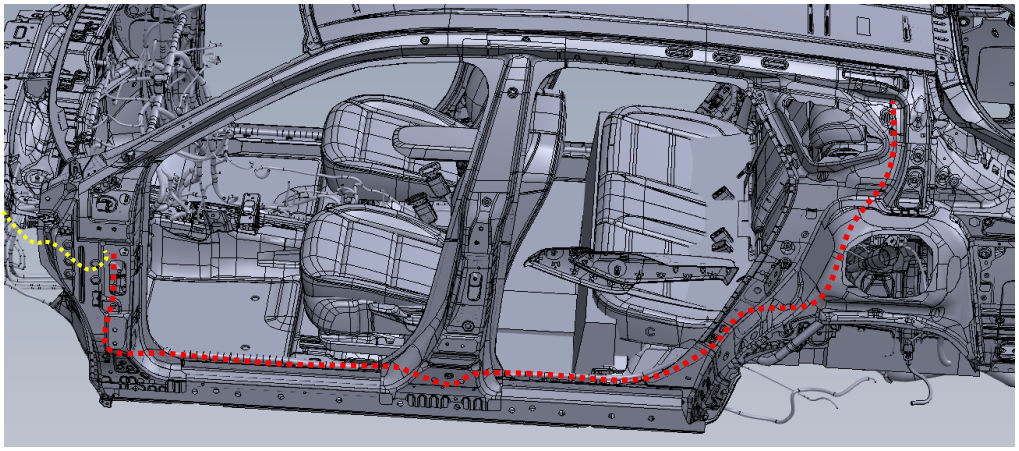

Side view of routing

FRONT

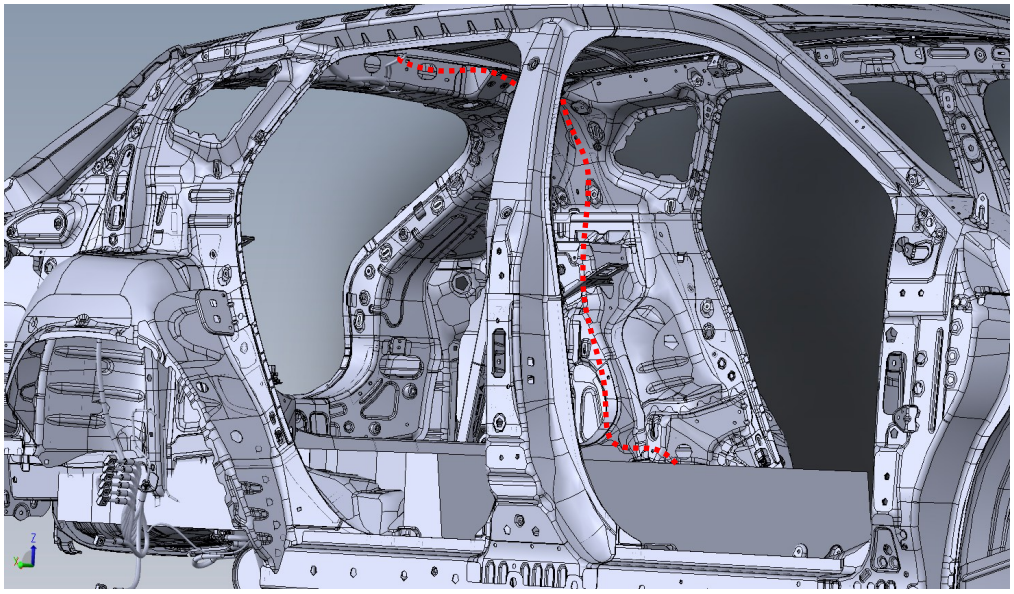

FRONT

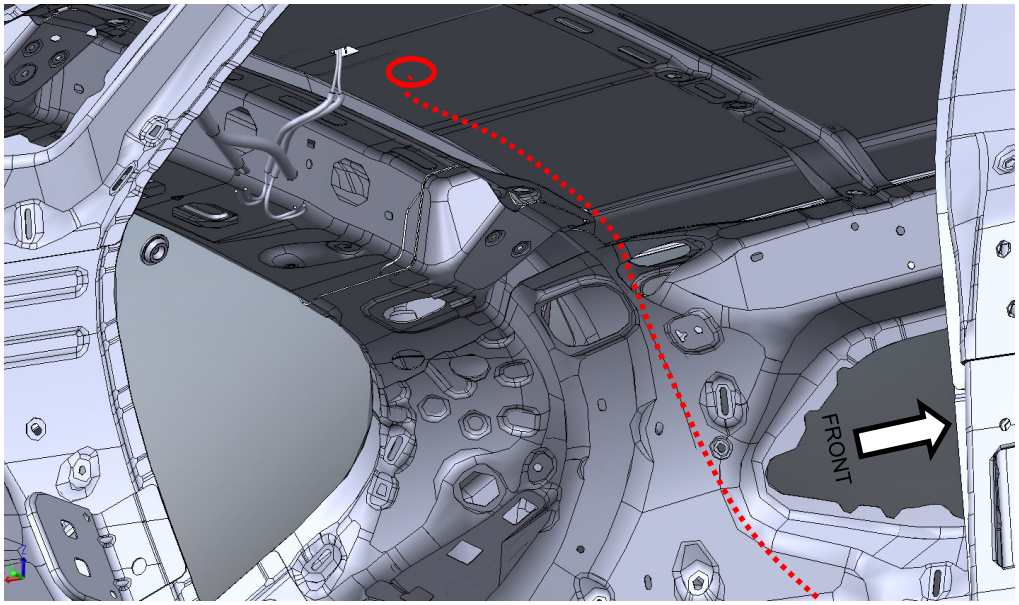

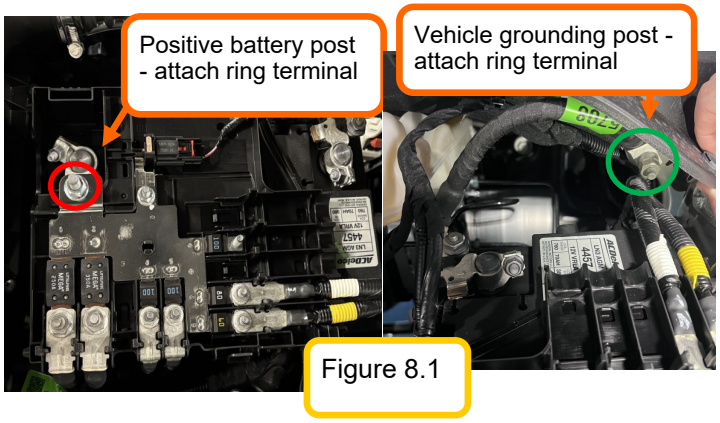

Figure 8.1

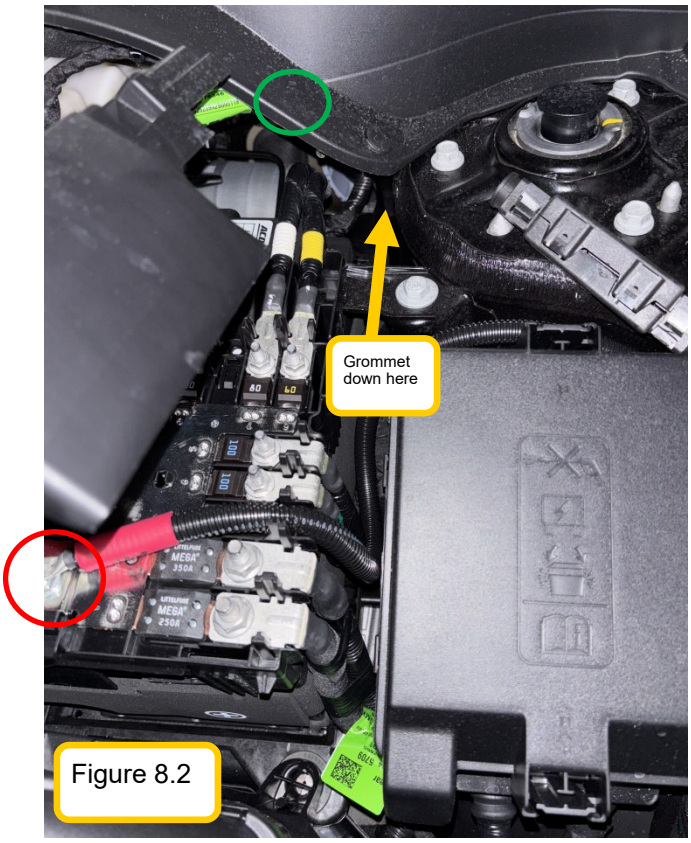

Figure 8.2

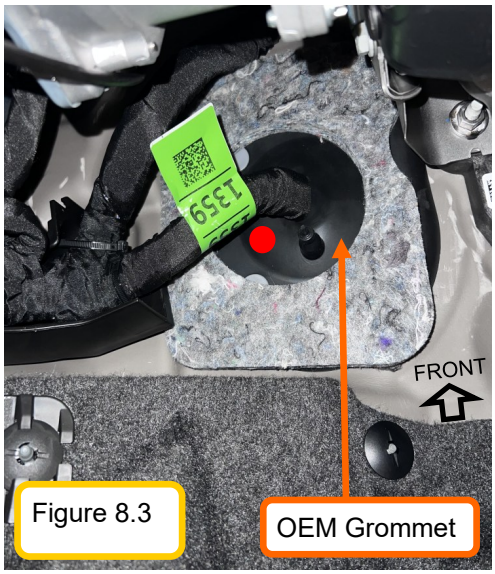

Figure 8.3

**Step 1:** Locate the power harness #67093.

Remove the fuse from the inline fuse holder until he end of the install

Locate the OEM battery under the hood.

**Step 2:**
Attach the red wire with the ring terminal to the battery positive post.

Attach the black wire with the grounding stud for the battery negative post.
Figure 8.1.

Route the white connector end along the edge of the battery box to the firewall. (You can tuck the wiring down into the gaps in the underhood area to hide the harnessing a bit if needed)/

**Step3:**
Locate the firewall grommet from underneath the kick panel inside the cab on the driver's side.
Figure 8.3.

Cut an "X" or Drill a hole (to fit the grommet on the power harness) into the OEM firewall grommet. An example of a place to cut/drill is shown in Figure 8.3.

**IF DRILLING INTO GROMMET, BE SURE TO CHECK THAT THE OPPOSING SIDE OF THE FIREWALL IS CLEAR BEFORE DRILLING.**

Route the white connector end through the firewall.

****IF INSTALLING FRONT STROBES ON THS INSTALL: LOCATE THE FRONT STROBE HARNESS #67102. ROUTE THE SINGLE CONNECTOR END THROUGH THE GROMMET WITH THE POWER HARNESS AT THIS TIME****
**Reference later page for routing.**

**Step 4:**
Locate the switch harness #67097
Connect the switch harness connector to the power harness in the kick panel area.

**Step 5:**
There's two ways to mark the switch location for drilling. Either way, the hole will be about 2.5" away from the edge of the IP on the flat section of trim (Figure 9.2):

- Stick your hand up into the dash like in Figure 9.1, and feel for the open spot to drill. Long fingers can get around the bumps in the trim and find the flat section, and the cavity is visible from side when side IP trim is removed.
- If you cannot confirm it, remove the knee bolster with the steps in Figure 9.3. This will make it easy to put hand under trim and feel for the flat section

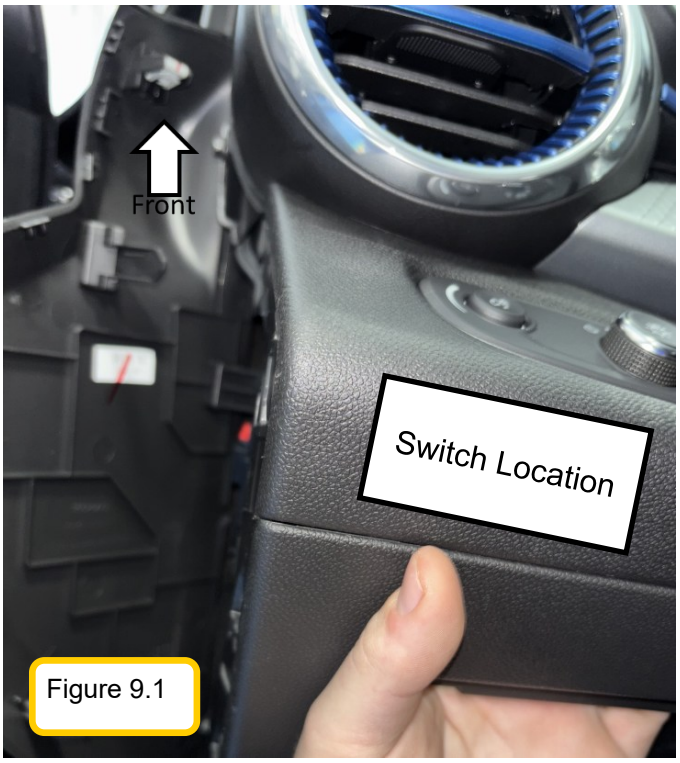

Figure 9.1

Figure 9.2

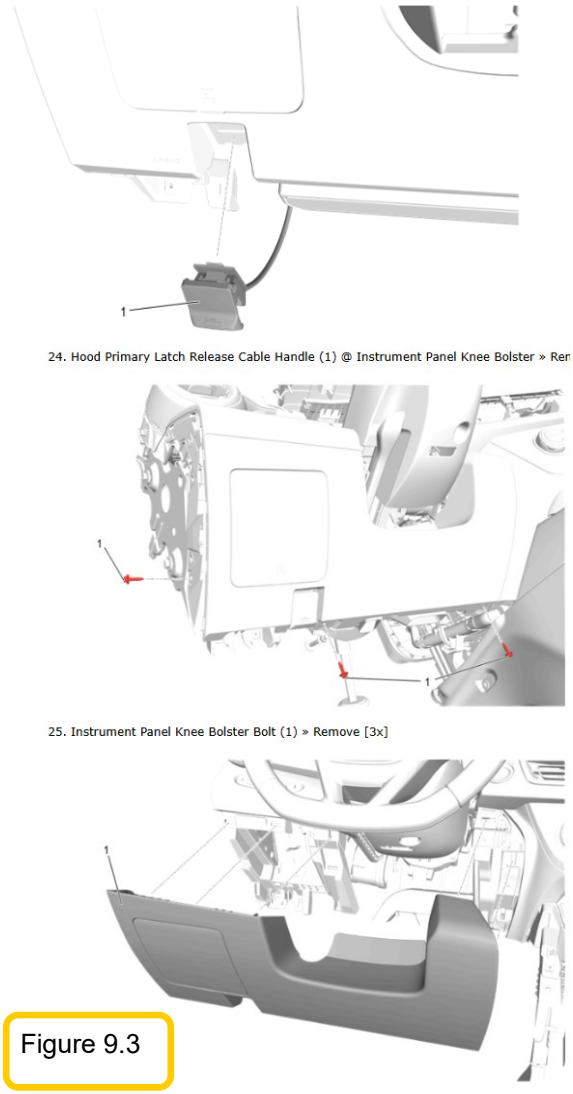

Figure 9.3

**Step 6:**
**Check there's nothing behind drill area before drilling**

The drill hole center of the switch location is just over 2.5" from the left side of the IP paneling

Drill a hole for the switch, in the trim panel like shown in Figure 9.3.

Route the harnesses through the hole

**Step 7:**
Connect the ground spade to the gold pin on the rocker switch

Connect the white battery power spade to the opposite terminal on the switch.

Connect the red spade to the middle pin

Insert the switch into the hole and place the strobe/beacon decal (if supplied) around the switch.

Reassemble all trim and secure wiring.

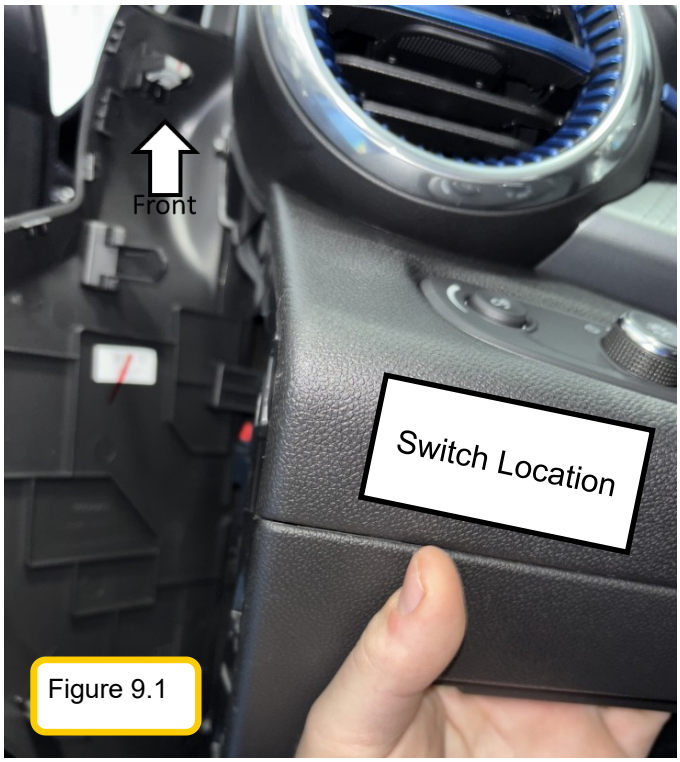

Figure 9.1

Figure 9.2

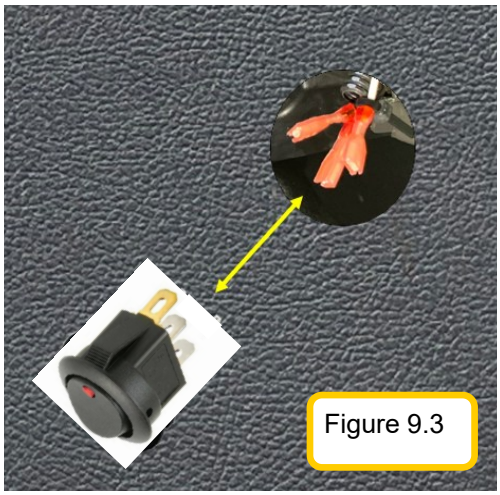
Figure 9.3

# Strobe Install—If Applicable

Strobe pictures are for reference only. Please refer to product structure/spec sheets for the actual strobes for the install.

Figure 11.1

**Step 1:**
Locate the rear strobe harness #67106.

Connect the rear strobe harness to the switch harness (one of the remaining unused connectors) in the driver's foot well. Figure 11.1.

**Step 2:**
Under the dash, bring the rear strobe harnessing to the far left side of the driver's footwell and down towards the floor (Figure 11.2 and 11.3).

Locate the driver's side door sill area (Figure 11.4). Use a trim tool to remove the trim panels in the driver's step well.

The harnessing will route along/under the front driver footwell trim towards the back of the vehicle.

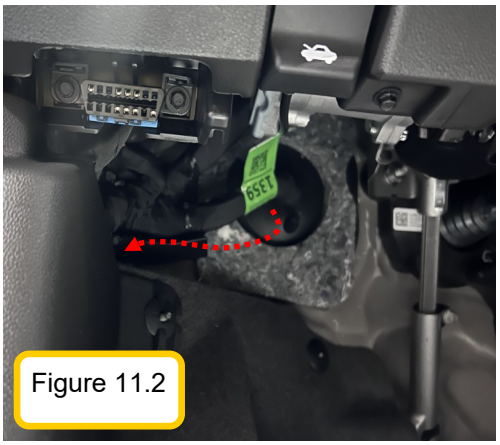
Figure 11.2

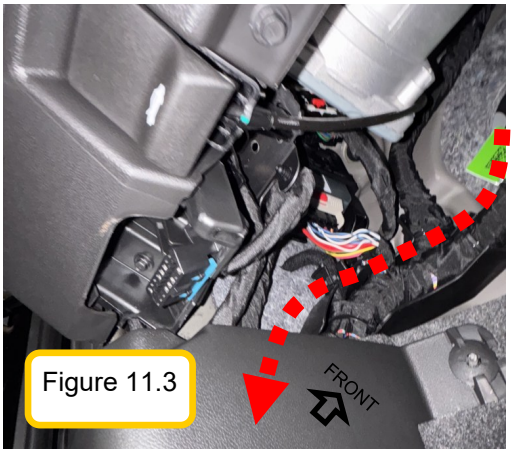

Figure 11.3

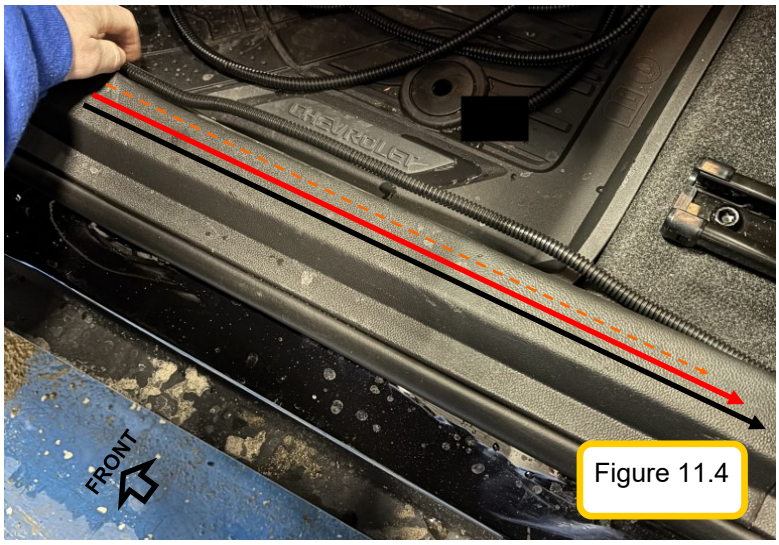

Figure 11.4

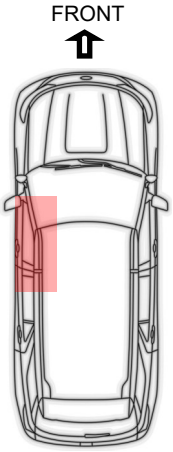


**Step 3:**
The wires will follow this path from the driver door towards the back (under the B-pillar trim), but be careful of the seatbelt/pretensioner.

- When the cables approach the seatbelt pretensioner, they need to be kept away from the mechanism!
- The cables and orange wire will ride along the body sheet metal along the door thresholds.
- The cables will go beneath/around the connector wire of the pretensioner
- **Utilize wire zip ties (where possible) for making sure the wire is well bundled away from the pretensioner. Secure to OEM wiring or vehicle frame where applicable.**
- **Use Figure 12.2 as reference only. Route to avoid interfering with seatbelt is most important!**

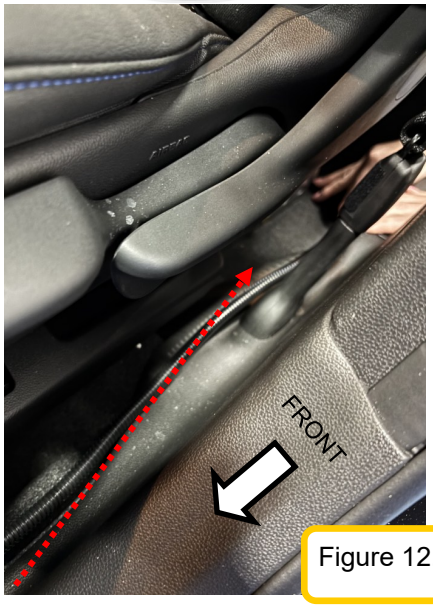

Figure 12.1

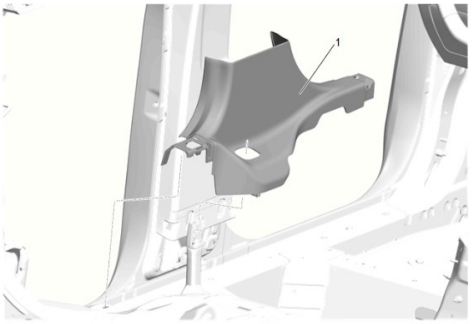


14. Release the retainers with a suitable plastic trim tool.
15. Center Pillar Lower Trim Panel (1) » Remove

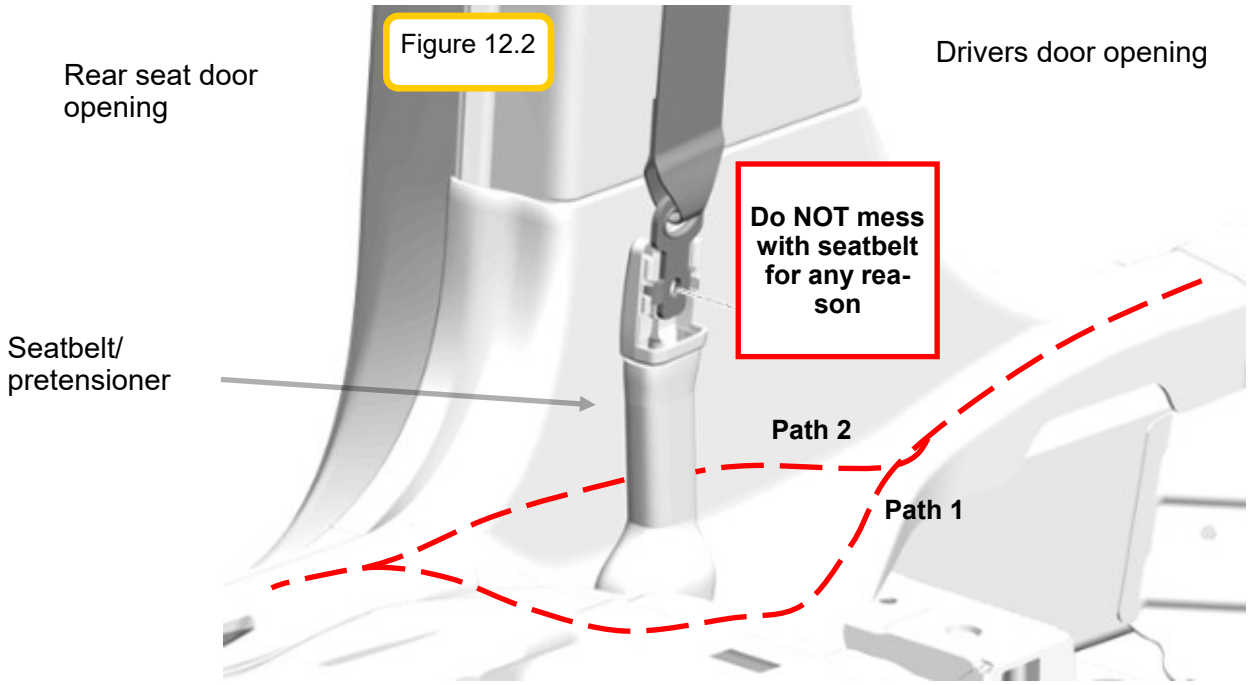

Figure 12.2

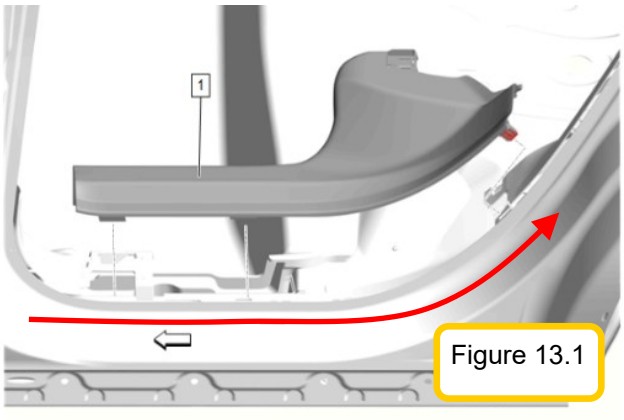

Figure 13.1

**Step 4:**
Remove the rear side door sill trim piece on the driver's side, and continue routing the rear strobe harnessing towards the back of the vehicle (Figure 13.1).

Open the back hatch, and pull out the bottom flooring of the cargo area to reveal the spare tire well. (Figure 13.2)
From there, use trim tools to remove the trim piece between the well and the hatch (the liftgate sill trim).

On the lower driver's side cargo wall trim piece, remove the cargo tie on D-ring (Figure 13.3)

On the upper driver's side cargo wall trim piece, use a M7 to remove the retaining bolt. Then use a trim tool (along with pulling up on the trim slightly) to remove the upper trim piece (leaving a cavity like the one circled in the picture). (Figure 13.4)

13. Rear Side Door Sill Garnish Molding (1) » Remove

Figure 13.2

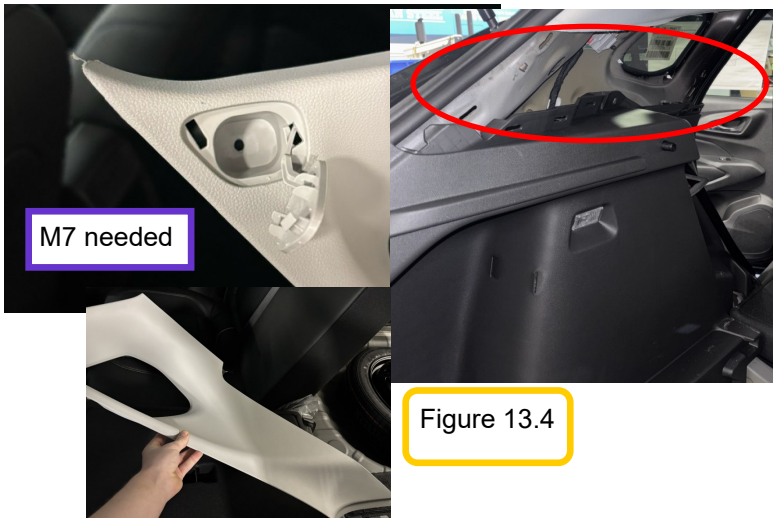

Figure 13.4

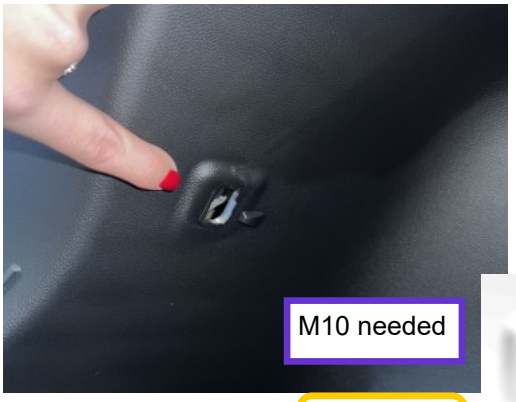

Figure 13.3

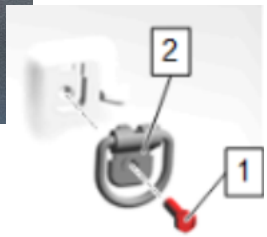

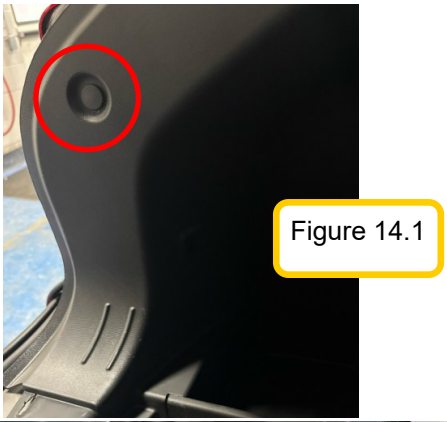
Figure 14.1

**Step 3:**
Remove any remaining trim retainers on the outside of the trim (circled example). Enough restraints need to be removed to gently pull the lower wall trim piece out enough to reach the OEM harnessing.

When able, gently pull back the lower wall trim piece out enough so the area behind it is accessible to feed the rear strobe harness through. Do not remove fully, as many connectors still go to the trim itself. (Figure 14.2)

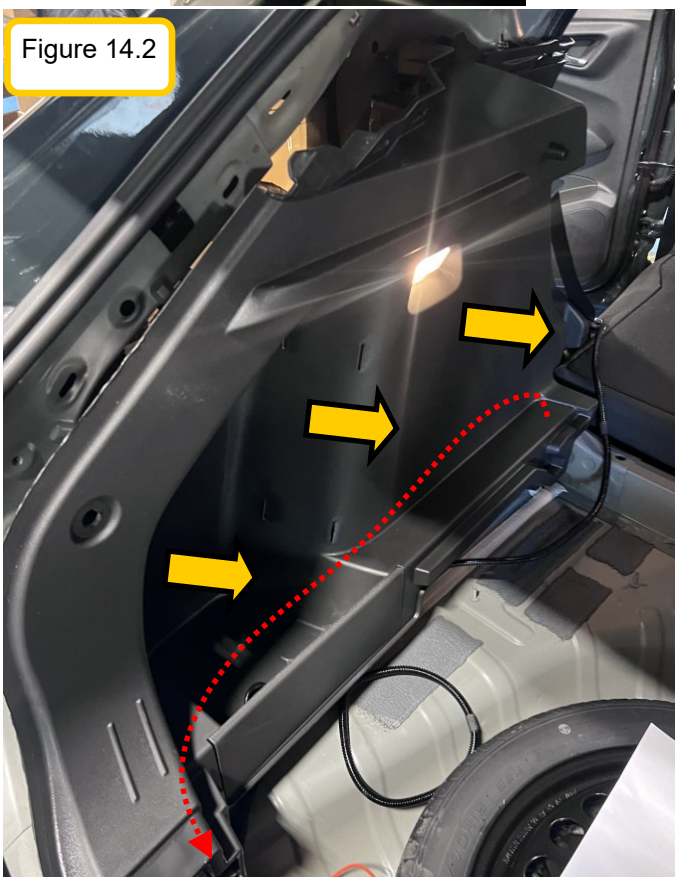
Figure 14.2

**Step 4:**
Route the harnessing rearward behind the pulled-out lower trim piece, still so that the lower trin piece will be able to be reinstalled. (Figure 14.2)

Route the harnessing towards the center of the cargo area along the floor, and into the cavity shown in Figure 14.4.

In that cavity is a grommet to go under the vehicle (Figure 14.3). Cut/drill a small hole in the grommet for wire pass through. Silicone at end on install.

Figure 14.3

Figure 14.4

**Step 4: Mounting Rear Strobes**

Line up the strobes wide enough so the outside part of strobe casing lines up with the liftgate side sill trims (see Figure 15.1 for reference).

Use the strobe as a template, mark the center hole location on the bumper (for routing the wires through).

Drill a 3/8” hole for the wire pass through of the strobe. Use primer on the hole to prevent rusting. Figure 15.2.

Use fish tape to route the harness through the grommet to the desire strobe location
Connect the strobe light to the harness and silicone the hole.
Place the strobes in their desired locations and fasten them onto the bumper with the **Ecco supplied screws.**

*****TORQUE STROBES TO 10-IN-LB’S MAXIMUM*****

Repeat for the right side strobe.

**Use below picture as REFERENCE ONLY, since picture is from a F150**

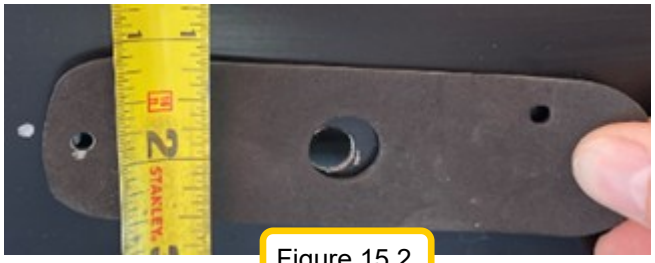

Figure 15.2

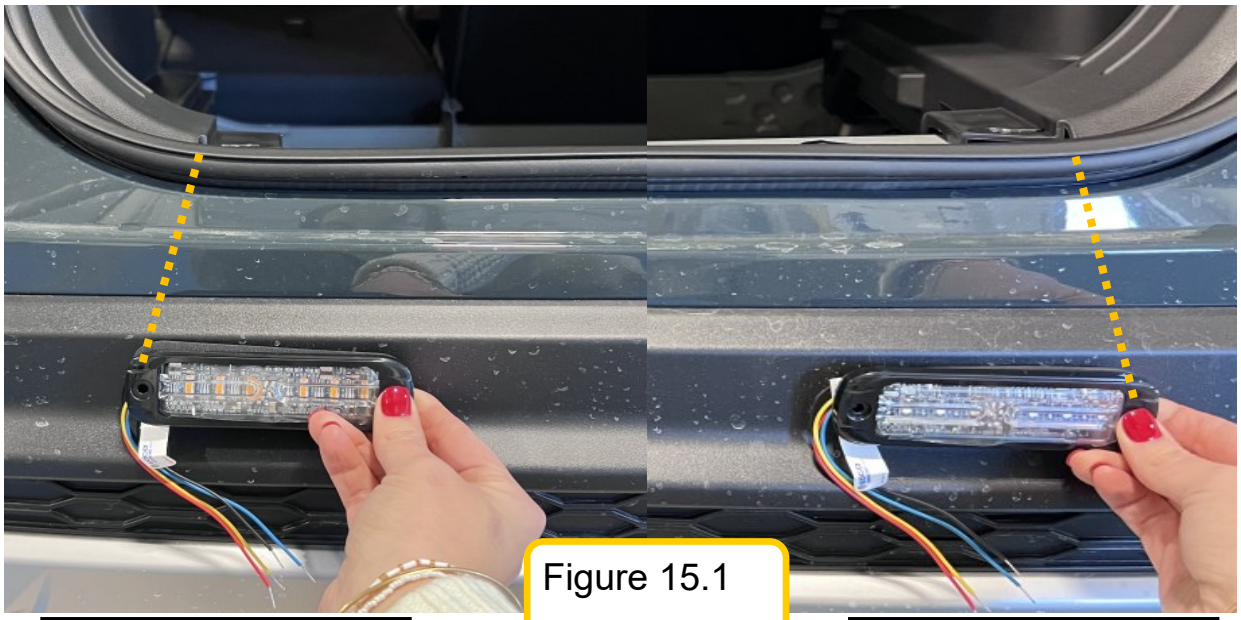

Figure 15.1

Driver Side Strobe

Curb Side Strobe

Figure 16.1

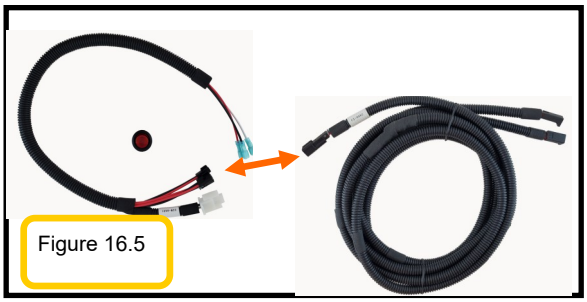

Figure 16.5

**Step 7: Mounting Front Strobes**

Locate front strobe harness #67102.
**This harness should already be routed from the engine compartment to the driver side foot well, with the power harness. If this is not done, please do this now.**

Connect the front strobe harness to the switch harness (one of the remaining unused connectors) in the driver's foot well (Figure 16.5).

Route the front strobe harness leads to their respective areas at the front under the hood (Figure 16.1)

Locate the passenger front headlight area.

Line the bottom edge of the strobe with the left edge of the front metal decal (Figure 16.2).

Place the strobe 2.5" up from the bottom edge of the front metal decal (Figure 16.3).

Use the strobe as a template, mark the center hole location on the panel (for routing the wires through).

Drill a 3/8" hole for the wire pass through on the strobe.

Place the strobes in their desired locations and fasten them onto the grill with the supplied screws.

*****TORQUE STROBES TO 10-IN-LB'S MAXIMUM*****

Repeat for the other side strobe.

**NOTE:** If model of the Trax doesn't have that front metal decal used to determine strobe mounting location, they will generally be mounted in the same spot regardless of model (see Figure 16.4)

Figure 16.2

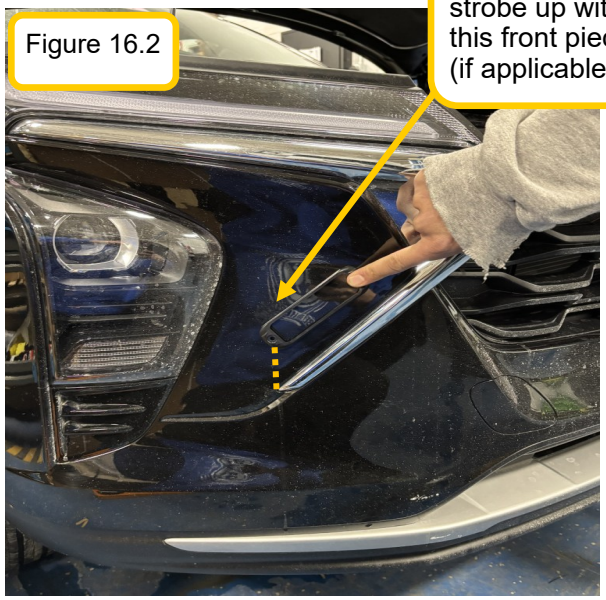

Line edge of strobe up with this front piece (if applicable)

Figure 16.3

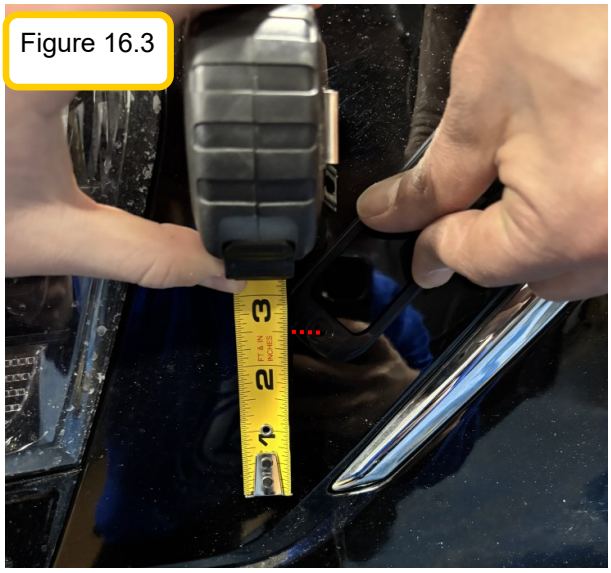

Figure 16.4

# Beacon/Lightbar Install—If Applicable

Beacon/Lightbar and mount pictures are for reference only. Please refer to product structure/ spec sheets for the actual beacon/lightbar/mount for the install.

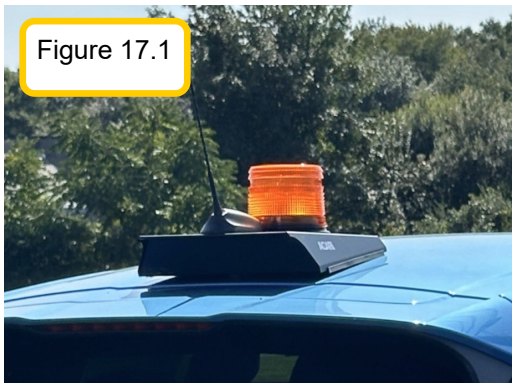


**See Figure 17.1 for beacon Visual reference.**

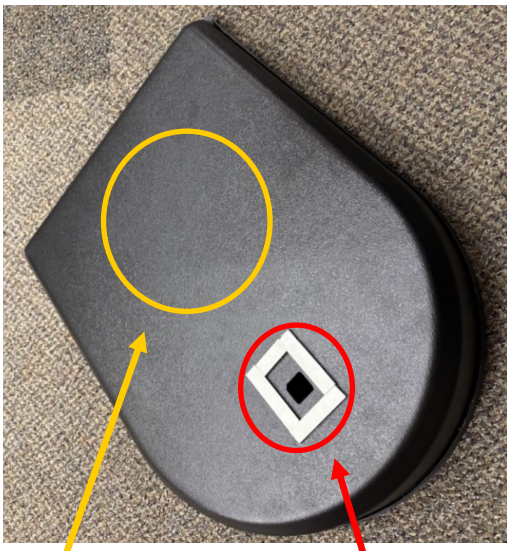


**Step 1: On a table/bench: Assemble the light**
Center the beacon onto the flat section of the mount, keeping in mind to stay away from the antenna hole in the mount

Using the beacon/lightbar as template, mark the needed holes for mounting.
Assemble the beacon to the mount using the supplied fasteners on your marks.

Drill the hole IN THE MOUNT for beacon/lightbar the wiring pass through and insert the provided grommet (if applicable).
**If there is a connector on the end of the light-bar/ beacon, use the 1" grommet (36096-0).**
**If there is not a connector, use the 3/8" grom-met (70805) and refer to the next page.**

Silicone the grommet/pass through hole

(the mount will go under the antenna trim)

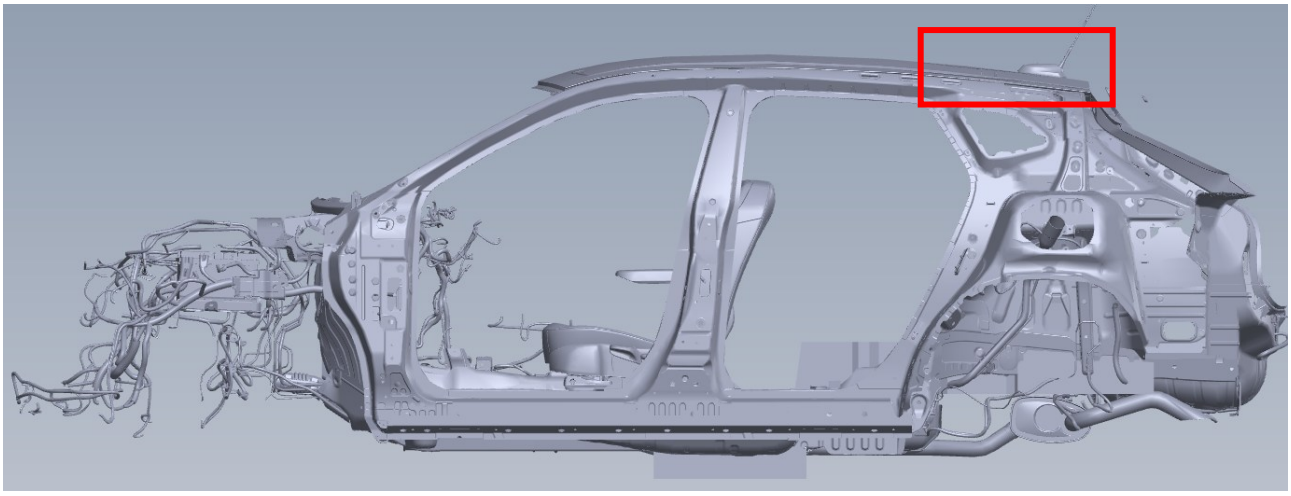

# If Lightbar/Beacon does not have a connector on the wires:

Figure 18.1

Figure 18.2

Figure 18.3

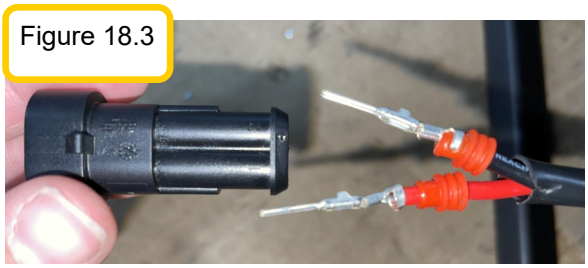

Figure 18.4

Figure 18.5

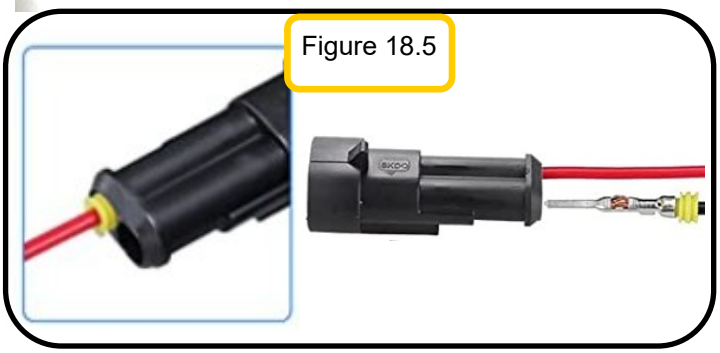

Figure 18.6

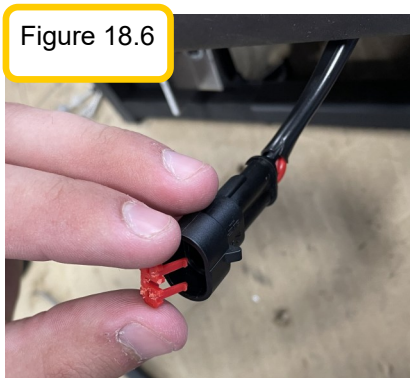

Figure 18.7

**After mounting the light to the Acari mount and pulling the wire through the grommet (70805)**

Locate the connector housing inside the lightbar/beacon box. Figure 18.1.

Note if it has a red insert inside the connector or not. Refer to figure 18.2 for red insert inside the connector.

Insert the lightbar wire terminals into the connector. **See steps below:**

In these steps be very careful to place the terminals into the correct side of the connector.

Line the red wire terminal up with cavity #1 and the black wire terminal up with cavity #2. Figure 18.3.

Note the connector has a “1” and a “2” noted on the connector (circled in red). Figure 18.4. The red wire will be inserted into the #1 cavity of the connector. The black wire will be inserted into the #2 cavity on the connector.

Be sure to align the terminal prongs up with the inside of the connector pin outs.

Carefully insert the terminals into their designated section. Figure 18.5.

Also be sure the terminals snap into position. You should feel or hear a click when they are correctly inserted.

Pull on the wiring to be sure the connectors have been inserted completely.

**If not already done:**
Insert the red plastic piece into the top end of the connector. This will also click into place. Figure 18.6 and 18.7.

Silicone the grommet/wiring.

**See Figure 19.1 for beacon Visual reference.**

**Step 2: Prepare the Roof for Mounting**
If haven't done so already, in the upper driver's side cargo wall trim piece, use a M7 to remove the retaining bolt. Then use a trim tool (along with pulling up on the trim slightly) to remove the upper trim piece (leaving a cavity like the one circled in the picture). (Figure 19.2).

Repeat above procedure for the passenger side.

Remove the OEM connector on the driver's side of the vehicle in the cargo area (Figure 19.3)

At the rear inside the vehicle, remove the two trim retainers holding the headliner up (Figure 19.4). After that carefully remove the back portion of the headliner, enough so that the wiring going up to the antenna can be accessed.

**Make sure no creases are made in the headliner when pulled down.**

From inside the cargo area, on the now-exposed antenna, loosen and remove spring retention clip from underside of antenna (Figure 19.5 for location reference). Disconnect both wire connectors and then on top of the Trax, remove the antenna from the vehicle. Set the assembly aside for later.

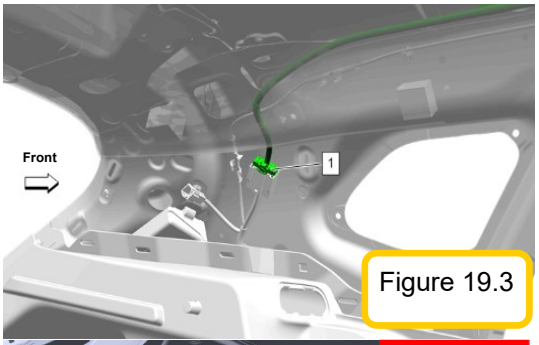


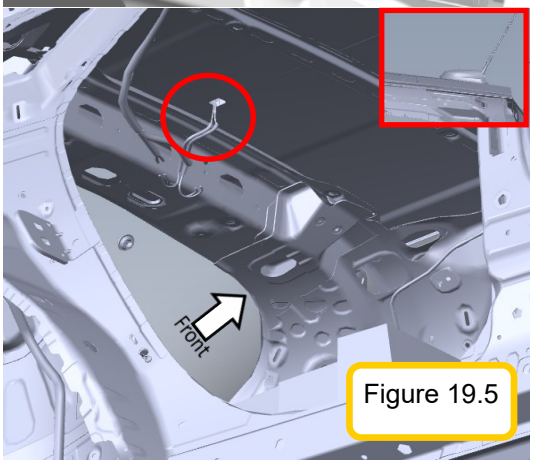


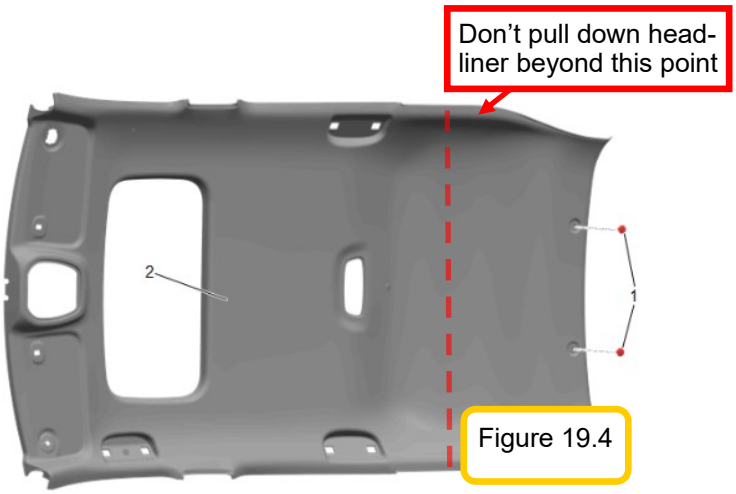

**Step 3: Routing (Refer to routing diagrams earlier in the instructions)**
Locate the beacon/lightbar harness #67112
Connect the beacon harness to the switch harness in the driver's foot well (Figure 16.5). Remove cable gland.

Route the beacon harness following the same routing path as the rear strobes (on previous pages) until you reach the cargo area.

****BE SURE TO AVOID ALL SEAT BELT RETENSIONERS****

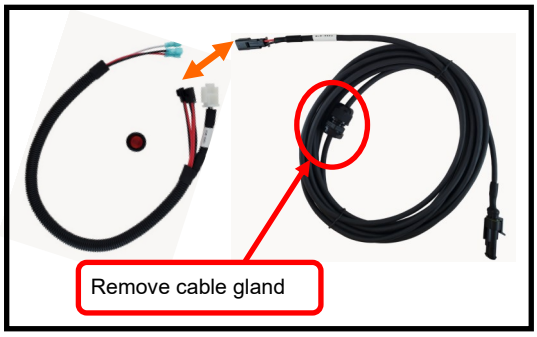


**Step 4:** Once the harnessing reaches the cargo area, and the appropriate driver side cargo area trim pieces have been removed on the wall, route the harnessing as shown in the Figures 20.1 through 20.4. Fish tape is recommended.

The harness will go up the C-pillar (far enough back to go behind that small driver's side window behind the rear seats), up over the liner on top of the vehicle, and through the OEM antenna wiring hole to reach the outside of the vehicle.

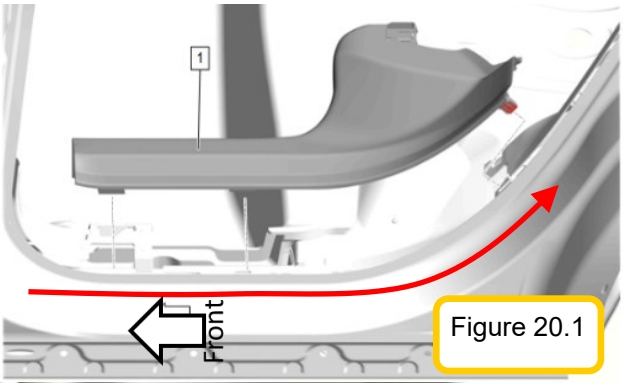

Figure 20.1

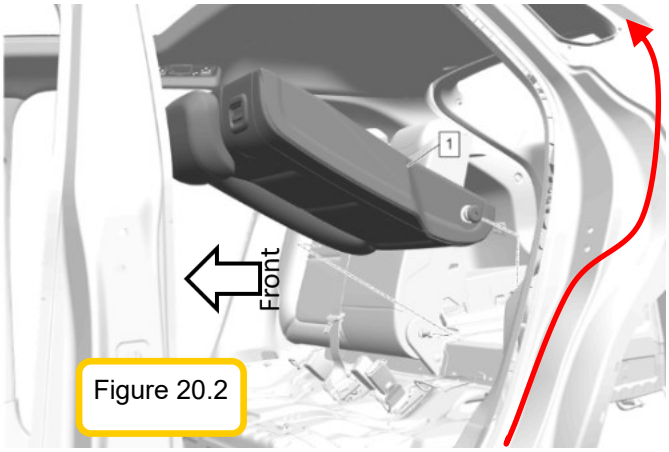

Figure 20.2

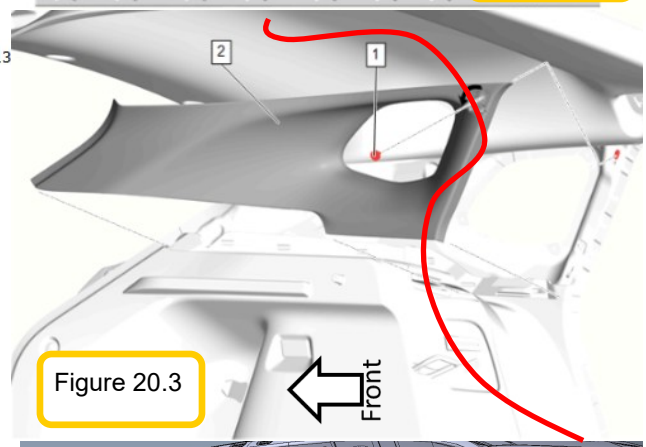

Figure 20.3

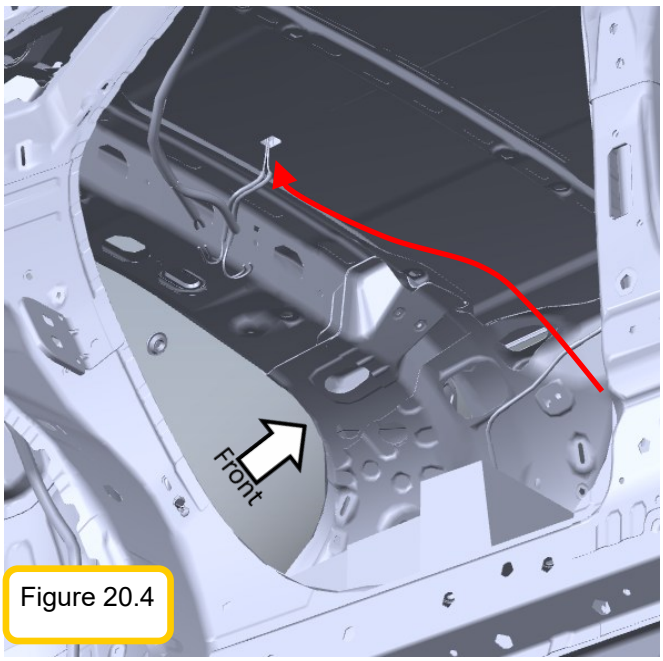

Figure 20.4

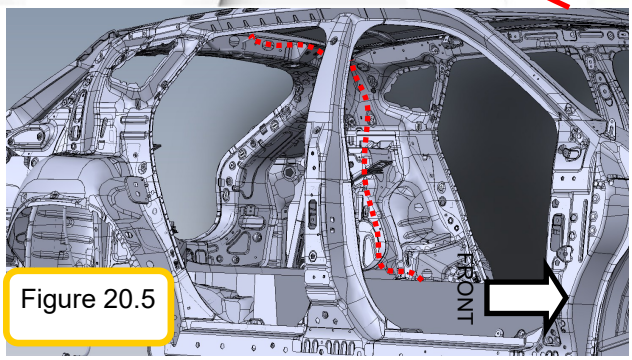

Figure 20.5

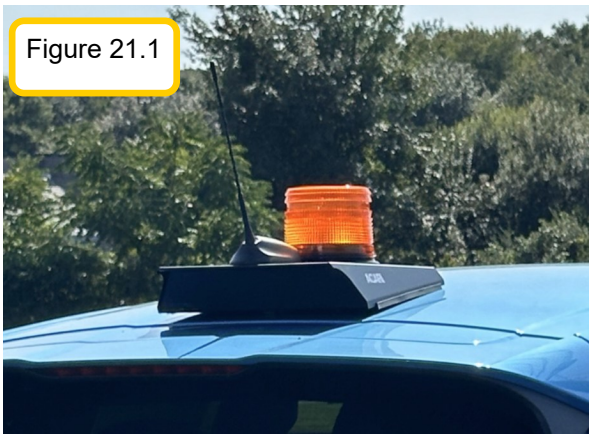
Figure 21.1

Figure 21.2

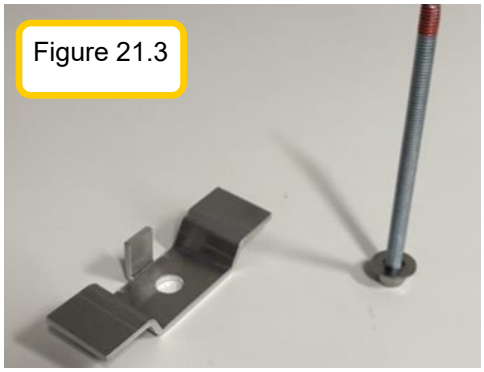
Figure 21.3

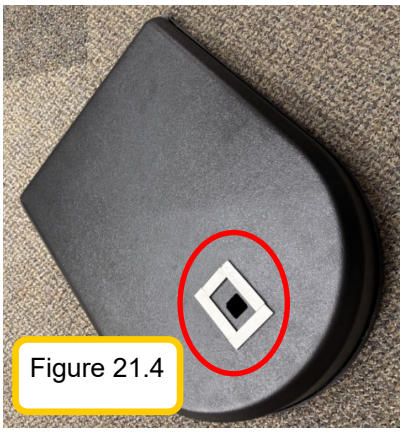
Figure 21.4

**See Figure 21.1 for beacon mounting reference.**

**Step 5: Install Mount**
Using the provided alcohol pred pad, clean the mounting surface on the rear top of the Trax where the VHB tape (Figure 21.2) will contact the roof around the perimeter of the mount.

Install the threaded rod (provided with mount; Figure 21.3) onto the underside of the base of the factory antenna unit (using the same mounting hole previously used by spring clip. Tighten threaded rod to ensure thread-locker bonding.

Remove the gasket adhesive backing around the antenna hole on top of the mount (Figure 21.4). Insert the threaded rod/wire connectors through the top mounting hole in the mount. Now secure the antenna unit to the top of the mount, and apply pressure to the top of the unit to ensure a secure fit.

Holding the mount above the vehicle, insert the threaded rods/antenna connectors/beacon harness #67112 through the roof hole. Plug the antenna connectors back into the antenna, and connect the beacon harness to the beacon's mating connector. Silicone roof hole from outside.

Remove the VHB tape backing along the front edge/perimeter of the mount and press down firmly. Now inside the vehicle, install the mounting clip to underside of roof, with registration clip facing the rear of the vehicle and the threaded rod extending through the hole in the mounting clip.

Install washer and nyloc nut to the threaded rod and tighten.

**Step 6:**

Once happy with the mount, tape up any excess wire around the roof hole, and reinstall the headliner, Store any excess beacon harnessing under the instrument panel.

Assemble the rest of the needed beacon pieces (if needed)

**Insert the fuse into the inline-fuse holder on the power harness. Secure all wiring with zip ties. Re-attach all trim. Re-assure all pass through holes have been silicone. Double check the functionality of the lights and switches.**

**THE INSTALL IS NOW COMPLETE**

PART NUMBER
13905-0

## ITEM DESCRIPTION: WIRE TIE, NYLON 40Lb, 8.5” BLACK

MANUFACTURER: WAYTEK, INC. or equivalent
MANUFACTURERS PART NUMBER: 21093M or 21093C

SPECIFICATIONS: STANDARD CABLE TIE
BLACK, NYLON
8-1/2” LONG
TENSILE STRENGTH: 40.0 LBS
21093M = 1,000 quanity
21093C = 100 quanity

SPECIAL NOTES: PART NUMBER IS BLACK.

# SUPPLIED BY: THIS ITEM IS ADRIAN AVAILABLE!

## PURCHASED PRODUCT DATA SHEET (PPDS)

THIS DRAWING/INFORMATION IS THE PROPERTY OF ADRIAN STEEL COMPANY AND IS NOT TO BE USED IN ANY MANNER THAT IS DETRIMENTAL TO THE INTEREST OF ADRIAN STEEL. COPYRIGHTS AND OR PATENTS THAT MAY BE THE PROPERTY OF APPLICABLE OWNERS MAY PROTECT INFORMATION AND/OR DRAWINGS OF SUPPLIED PRODUCTS.

ADRIAN STEEL®
VAN AND PICKUP EQUIPMENT

906 JAMES STREET
ADRIAN, MI 49221
517-265-6194
WWW.ADRIANSTEEL.COM

⚠ CAUTION ⚠

WHEN INSTALLING EQUIPMENT IN OR ON VEHICLES CHECK FOR FUEL TANKS, FUEL LINES, CONTROL LINES AND ELECTRICAL WIRING BEFORE DRILLING! ALWAYS USE DRILL BITS WITH INTEGRAL STOPS WHENEVER POSSIBLE!

| | |
|---|---|
| DRAWN BY: MDG | DATE DRAWN: 10/26/2006 |
| ECN NUMBER: 18021 | ECN DATE: 11/13/2015 |
| PART WEIGHT: 0.01 LBS. | REV. LEVEL: D |
| PART NUMBER: 13905-0 | |

PART NUMBER
26618-0

## ITEM DESCRIPTION: SILICONE, 1oz. TUBE

SPECIFICATIONS: SU5005 RTV SILICONE
1oz. TUBE
CLEAR OR EQUIVILENT
SELF PIERCING CAP

SPECIAL NOTES:

# SUPPLIED BY: THIS ITEM IS ADRIAN AVAILABLE!

## PURCHASED PRODUCT DATA SHEET (PPDS)

THIS DRAWING/INFORMATION IS THE PROPERTY OF ADRIAN STEEL COMPANY AND IS NOT TO BE USED IN ANY MANNER THAT IS DETRIMENTAL TO THE INTEREST OF ADRIAN STEEL. COPYRIGHTS AND OR PATENTS THAT MAY BE THE PROPERTY OF APPLICABLE OWNERS MAY PROTECT INFORMATION AND/OR DRAWINGS OF SUPPLIED PRODUCTS.

ADRIAN STEEL®
VAN AND PICKUP EQUIPMENT

906 JAMES STREET
ADRIAN, MI 49221
517-265-6194
WWW.ADRIANSTEEL.COM

⚠ CAUTION ⚠

WHEN INSTALLING EQUIPMENT IN OR ON VEHICLES CHECK FOR FUEL TANKS, FUEL LINES, CONTROL LINES AND ELECTRICAL WIRING BEFORE DRILLING! ALWAYS USE DRILL BITS WITH INTEGRAL STOPS WHENEVER POSSIBLE!

| | |
|---|---|
| DRAWN BY: JLC | DATE DRAWN: 7/21/2001 |
| ECN NUMBER: 16551 | ECN DATE: 7/22/2014 |
| PART WEIGHT: 0.02 LBS. | REV. LEVEL: C |
| PART NUMBER: 26618-0 | |

PART NUMBER
26618-0

## ITEM DESCRIPTION: SILICONE, 1oz. TUBE

SPECIFICATIONS: SU5005 RTV SILICONE
1oz. TUBE
CLEAR OR EQUIVILENT
SELF PIERCING CAP

SPECIAL NOTES:

# SUPPLIED BY: THIS ITEM IS ADRIAN AVAILABLE!

## PURCHASED PRODUCT DATA SHEET (PPDS)

THIS DRAWING/INFORMATION IS THE PROPERTY OF ADRIAN STEEL COMPANY AND IS NOT TO BE USED IN ANY MANNER THAT IS DETRIMENTAL TO THE INTEREST OF ADRIAN STEEL. COPYRIGHTS AND OR PATENTS THAT MAY BE THE PROPERTY OF APPLICABLE OWNERS MAY PROTECT INFORMATION AND/OR DRAWINGS OF SUPPLIED PRODUCTS.

ADRIAN STEEL®
VAN AND PICKUP EQUIPMENT

906 JAMES STREET
ADRIAN, MI 49221
517-265-6194
WWW.ADRIANSTEEL.COM

⚠ CAUTION ⚠

WHEN INSTALLING EQUIPMENT IN OR ON VEHICLES CHECK FOR FUEL TANKS, FUEL LINES, CONTROL LINES AND ELECTRICAL WIRING BEFORE DRILLING! ALWAYS USE DRILL BITS WITH INTEGRAL STOPS WHENEVER POSSIBLE!

| | |
|---|---|
| DRAWN BY: JLC | DATE DRAWN: 7/21/2001 |
| ECN NUMBER: 16551 | ECN DATE: 7/22/2014 |
| PART WEIGHT: 0.02 LBS. | REV. LEVEL: C |
| PART NUMBER: 26618-0 | |

PART NUMBER
36096-0

## ITEM DESCRIPTION: GROMMET,RUBBER,1" ID

MANUFACTURER: CTW (or equiv.)
MANUFACTURERS PART NUMBER: G2930

SPECIFICATIONS:
1" I.D.
1-1/4" PANEL HOLE DIA.
3/16" MAX PANEL THICKNESS
1-1/2" O.D.
7/16" THICKNESS

SPECIAL NOTES: NONE

## SUPPLIED BY: THIS ITEM IS ADRIAN AVAILABLE!

### PURCHASED PRODUCT DATA SHEET (PPDS)

THIS DRAWING/INFORMATION IS THE PROPERTY OF ADRIAN STEEL COMPANY AND IS NOT TO BE USED IN ANY MANNER THAT IS DETRIMENTAL TO THE INTEREST OF ADRIAN STEEL. COPYRIGHTS AND OR PATENTS THAT MAY BE THE PROPERTY OF APPLICABLE OWNERS MAY PROTECT INFORMATION AND/OR DRAWINGS OF SUPPLIED PRODUCTS.

ADRIAN STEEL
VAN AND PICKUP EQUIPMENT

906 JAMES STREET
ADRIAN, MI 49221
517-265-6194
WWW.ADRIANSTEEL.COM

⚠ CAUTION ⚠

WHEN INSTALLING EQUIPMENT IN OR ON VEHICLES CHECK FOR FUEL TANKS, FUEL LINES, CONTROL LINES AND ELECTRICAL WIRING BEFORE DRILLING! ALWAYS USE DRILL BITS WITH INTEGRAL STOPS WHENEVER POSSIBLE!

| | |
|---|---|
| DRAWN BY: HJE | DATE DRAWN: 04/01/2008 |
| ECN NUMBER: 19252 | ECN DATE: 01/31/2017 |
| PART WEIGHT: 0.01 LBS. | REV. LEVEL: D |
| PART NUMBER: 36096-0 | |

PART NUMBER
**55073**

## ITEM DESCRIPTION: STROBE SWITCH DECAL SET

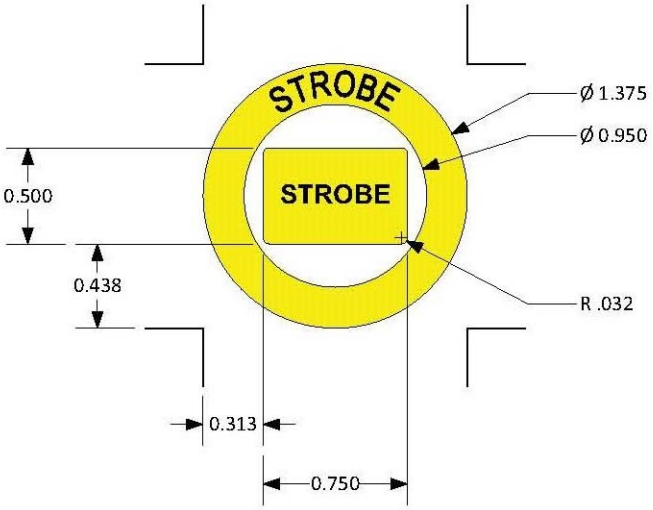


MANUFACTURER: VANNER
MANUFACTURERS PART NUMBER: TBD

SPECIFICATIONS: (1) Circular Yellow Decal (ID=0.950", OD=1.375") with "STROBE" in black letters
(1) Rectangular Yellow Decal (H=0.500", L=0.750") with "STROBE" in black letters

SPECIAL NOTES: For round rocker switch (OD=0.780") and Ford Transit Upfitter Switches.

# SUPPLIED BY: THIS ITEM IS ADRIAN AVAILABLE!

## PURCHASED PRODUCT DATA SHEET (PPDS)



THIS DRAWING/INFORMATION IS THE PROPERTY OF ADRIAN STEEL COMPANY AND IS NOT TO BE USED IN ANY MANNER THAT IS DETRIMENTAL TO THE INTEREST OF ADRIAN STEEL. COPYRIGHTS AND OR PATENTS THAT MAY BE THE PROPERTY OF APPLICABLE OWNERS MAY PROTECT INFORMATION AND/OR DRAWINGS OF SUPPLIED PRODUCTS.

ADRIAN STEEL
Cargo Management Solutions for Commercial Vehicles
906 JAMES STREET
ADRIAN, MI 49221
517-265-6194
WWW.ADRIANSTEEL.COM

**⚠ CAUTION ⚠**

**WHEN INSTALLING EQUIPMENT IN OR ON VEHICLES CHECK FOR FUEL TANKS, FUEL LINES, CONTROL LINES AND ELECTRICAL WIRING BEFORE DRILLING! ALWAYS USE DRILL BITS WITH INTEGRAL STOPS WHENEVER POSSIBLE!**

| | |
|---|---|
| DRAWN BY: RJB | DATE DRAWN: 11/15/2017 |
| ECN NUMBER: XXXX | ECN DATE: XXXXXX |
| PART WEIGHT: 0.02 LBS. | REV. LEVEL: A |
| PART NUMBER: 55073 | |

PART NUMBER
**55073**



THIS DRAWING/INFORMATION IS THE PROPERTY OF ADRIAN STEEL COMPANY AND IS NOT TO BE USED IN ANY MANNER THAT IS DETRIMENTAL TO THE INTEREST OF ADRIAN STEEL. COPYRIGHTS AND OR PATENTS THAT MAY BE THE PROPERTY OF APPLICABLE OWNERS MAY PROTECT INFORMATION AND/OR DRAWINGS OF SUPPLIED PRODUCTS.

**ADRIAN STEEL**
Cargo Management Solutions for Commercial Vehicles

**906 JAMES STREET**
**ADRIAN, MI 49221**
**517-265-6194**
**WWW.ADRIANSTEEL.COM**

**⚠ CAUTION ⚠**

**WHEN INSTALLING EQUIPMENT IN OR ON VEHICLES CHECK FOR FUEL TANKS, FUEL LINES, CONTROL LINES AND ELECTRICAL WIRING BEFORE DRILLING! ALWAYS USE DRILL BITS WITH INTEGRAL STOPS WHENEVER POSSIBLE!**

| | |
|---|---|
| DRAWN BY: RJB | DATE DRAWN: 11/15/2017 |
| ECN NUMBER: XXXX | ECN DATE: XXXXXXX |
| PART WEIGHT: 0.02 LBS. | REV. LEVEL: A |
| PART NUMBER: 55073 | |

# FINAL APPLICATION LAYOUT

**IMPORTANT NOTE TO INSTALL CREWS:**

**LOC I QTY I Part # I Description I Size**

**Material: IJ39 I Lamination: 8518**

1 1: 6039597.Strobe Switch-1.52" x 2.07"

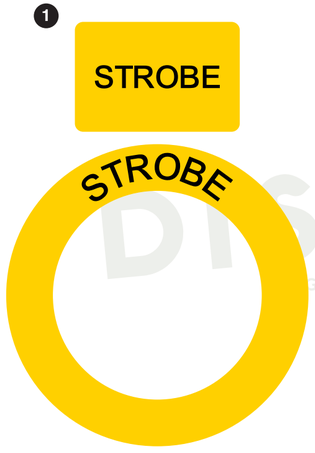


## Note: Part will not be weeded, just cut.

**Kit# 8001872 | Adrian Steel Part # 55073**

**06/01/2023 • JY**

© 2022 DISTYLL Graphics Solutions. All rights reserved.

ASCO REV.1 6/14/2023

| DISTYLL GRAPHIC SOLUTIONS FINAL DESIGN | CLIENT NAME: Adrian Steel | | Switch Decals | | O-ID: O15319-1 |
|---|---|---|---|---|---|
| | | | | | Rev #: XXXX |
| | DATE: 05/31/2023 | DESIGNER: TRN | | | Opt #: A |

Please check information to confirm accurate vehicle specifications.

**CLEANING INSTRUCTIONS** All surfaces must be considered contaminated. Clean the vehicle surface immediately before applying the film. Dust and other contaminates can collect quickly on the surface and prevent the film from adhering properly. Even a freshly painted surface can collect dust before graphics can be applied.

For the best success with the films recommended for vehicle graphics, always apply the graphics when the air and vehicle surface are both above 60°F (16°C) and below 90°F (32°C) before beginning the installation.

# PURCHASED COMPONENT KEY FEATURES

| DESCRIPTION OF REQUIREMENTS |
|---|
| DIMENSIONAL REQUIREMENTS (AS SHOWN ON DRAWING)<br>**N/A** |
| LOAD/RATING REQUIREMENT<br>**N/A** |
| MATERIAL REQUIREMENT<br>**N/A** |
| PACKAGING REQUIREMENT<br>**N/A** |
| OTHER REQUIREMENTS |

| Coverings | |
|---|---|
| Id | Assembly |
| [7] | |
| [8] | |

| Notes |
|---|
| 1 Lock Tape Loom with Tesa 51036 |
| 2 Add 15A Mini Fuse |
| 3 Add rubber grommet over harness loom; 150mm behind C2 |

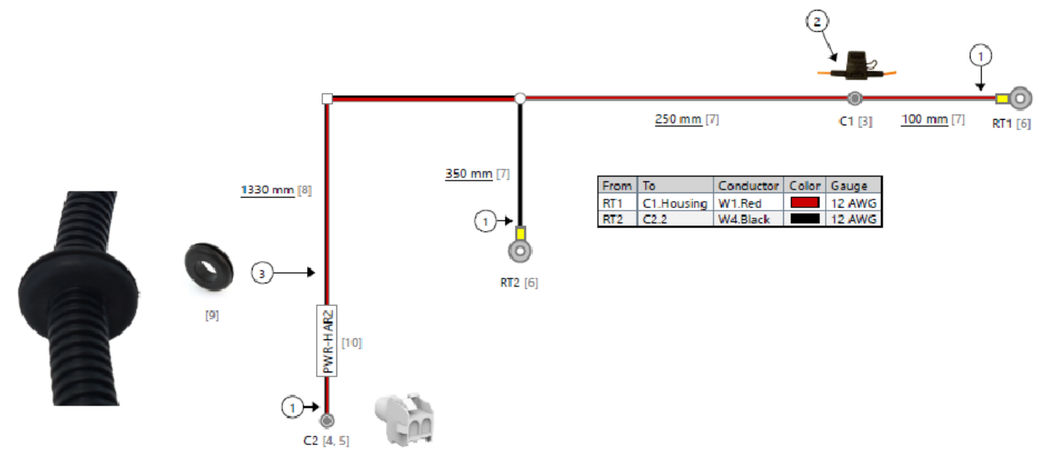


| From | To | Conductor | Color | Gauge |
|---|---|---|---|---|
| RT1 | C1.Housing | W1.Red | | 12 AWG |
| RT2 | C2.2 | W4.Black | | 12 AWG |

| From | To | Color | Gauge |
|---|---|---|---|
| C2.1 | C1.Housing | | 12 AWG |
| C2.2 | RT2 | | 12 AWG |

| Revisions | | | |
|---|---|---|---|
| Rev. | Date | Author | Description |
| A | 11/5/2021 | Bennet Fisher | Initial Drawing |

UNLESS OTHERWISE SPECIFIED
DIMENSIONS ARE IN MILLIMETERS [INCHES]
TOLERANCES: ±5MM

**PROPRIETARY AND CONFIDENTIAL**

THE INFORMATION CONTAINED IN THIS DRAWING IS THE SOLE PROPERTY OF AAMP GLOBAL. ANY REPRODUCTION IN PART OR AS A WHOLE WITHOUT THE WRITTEN PERMISSION OF AAMP GLOBAL IS PROHIBITED.

| | Name | Date |
|---|---|---|
| Designed By | Bennet Fisher | 11/5/2021 |
| Engineering Approval | ---- | ---- |
| Manufacturing Approval | ---- | ---- |
| Revision Approval | ---- | ---- |
| Quality Assurance | ---- | ---- |

AAMP — ADVANCING VEHICLE TECHNOLOGY

Part Number: PWR-HAR2 | Revision: ----
Description: Exterior Light Battery Harness | Sheet: 1 of 1

*THIS DRAWING IS THE PROPERTY OF ADRIAN STEEL COMPANY AND IS NOT TO BE USED IN ANY MANNER DETRIMENTAL TO THE INTERESTS OF ADRIAN STEEL COMPANY*

PRINTED DOCUMENT IS UNCONTROLLED



## TOLERANCES & INSPECTION

*UNLESS OTHERWISE SPECIFIED*

**ALL BEND ANGLES ARE 90 DEGREES**

**ALL DIMENSIONS ARE IN INCHES.**

**REFERENCE DIMENSIONS (X.XXX) DO NOT REQUIRE INSPECTION**

| FEATURES | HOLES/SLOTS | ANGLES |
|---|---|---|
| 0.0 = ± .125 | 0.0 = ± .062 | 0° = ± 2° |
| 0.00 = ± .062 | 0.00 = ± .031 | 0.0° = ± 1° |
| 0.000 = ± .031 | 0.000 = ± .015 | |

**Material Thickness: per ASTM Std.**
**Weld Callouts per AWS**

## RELEASE & REVISIONS

INITIAL ECN: **25378**

CURRENT ECN: **25378**

ECN DESCRIPTION:

**RELEASE FOR PRODUCTION**

REVISED BY:

# PURCHASED COMPONENT

REFERENCED SUPPLIER AND/OR MANUFACTURER
**AAMP GLOBAL**

REFERENCED SUPPLIER AND/OR MANUFACTURER PART NUMBER
**67093 OR PWR-HAR2**

COLOR (ONLY LIST IF COLOR SPECIFIC)

COMODITY ITEM (Y/N) (YES = ALL DIMENSIONS AND NOTES ARE REFERANCE)
(NOTE: DIMENSIONS AND FEATURES MAY VARY FOR A COMODITY ITEM.)
**NO**

## PART / PRODUCT IDENTIFICATION

**ADRIAN STEEL®**

**ADRIAN STEEL COMPANY**
**906 JAMES STREET, ADRIAN, MI 49221**

REVISION LEVEL **A**

MAT'L USED: **PURCHASED**

DESIGNED BY: **E.BURKE**

DESCRIPTION: **POWER HARNESS EXTERIOR 2**

WEIGHT (Lbs.): **0.2**

SEGMENT CODE: **ELE**

PART NUMBER: **67093**

| Coverings | |
|---|---|
| Id | Assembly |
| [7] | |
| [8] | |

| Notes | |
|---|---|
| 1 | Lock Tape Loom with Tesa 51036 |
| 2 | Add 15A Mini Fuse |
| 3 | Add rubber grommet over harness loom; 150mm behind C2 |

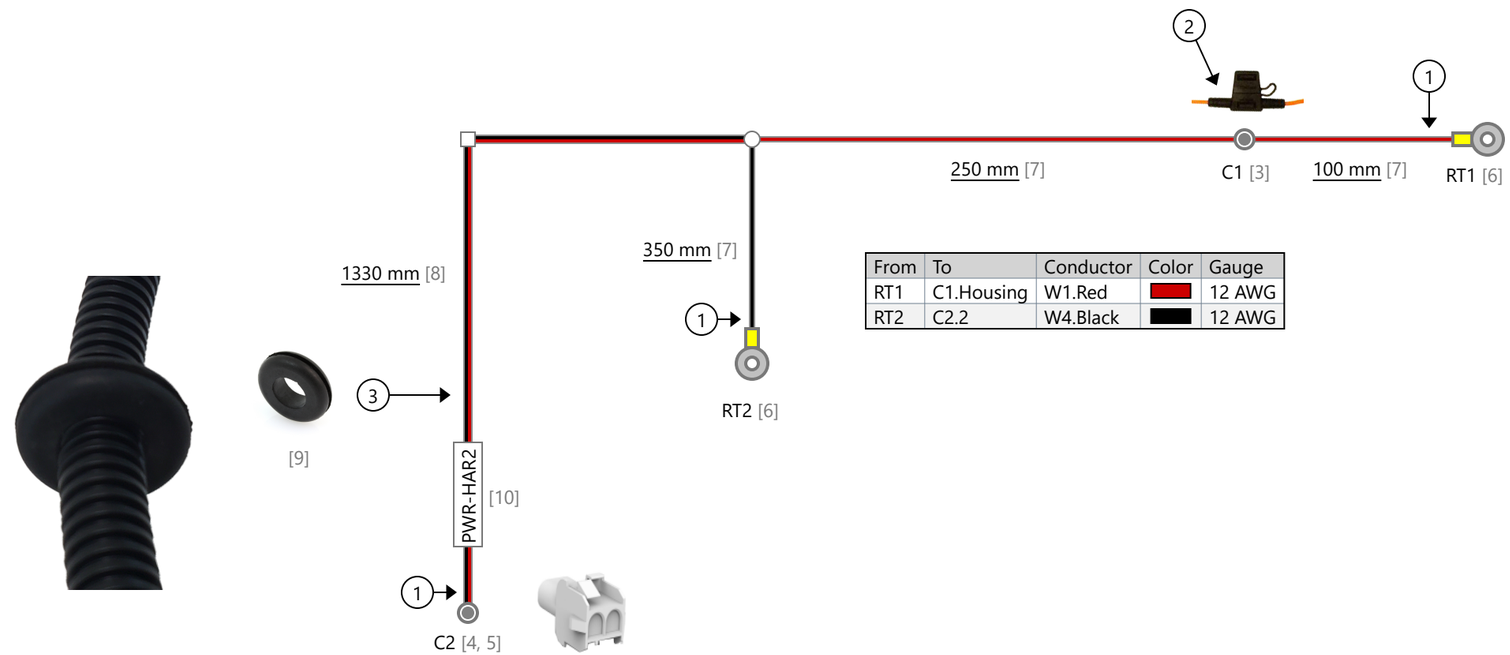


| From | To | Conductor | Color | Gauge |
|---|---|---|---|---|
| RT1 | C1.Housing | W1.Red | | 12 AWG |
| RT2 | C2.2 | W4.Black | | 12 AWG |

| From | To | Color | Gauge |
|---|---|---|---|
| C2.1 | C1.Housing | | 12 AWG |
| C2.2 | RT2 | | 12 AWG |

| Revisions | | | |
|---|---|---|---|
| Rev. | Date | Author | Description |
| A | 11/5/2021 | Bennet Fisher | Initial Drawing |

UNLESS OTHERWISE SPECIFIED

DIMENSIONS ARE IN MILLIMETERS [INCHES]
TOLERANCES: ±5MM

**PROPRIETARY AND CONFIDENTIAL**

THE INFORMATION CONTAINED IN THIS DRAWING IS THE SOLE PROPERTY OF AAMP GLOBAL. ANY REPRODUCTION IN PART OR AS A WHOLE WITHOUT THE WRITTEN PERMISSION OF AAMP GLOBAL IS PROHIBITED.

| | Name | Date |
|---|---|---|
| Designed By | Bennet Fisher | 11/5/2021 |
| Engineering Approval | ---- | ---- |
| Manufacturing Approval | ---- | ---- |
| Revision Approval | ---- | ---- |
| Quality Assurance | ---- | ---- |

AAMP
ADVANCING VEHICLE TECHNOLOGY

Part Number: PWR-HAR2

Revision: ----

Description:
Exterior Light Battery Harness

Sheet: 1 of 1

# PURCHASED COMPONENT KEY FEATURES

| DESCRIPTION OF REQUIREMENTS |
|---|
| DIMENSIONAL REQUIREMENTS (AS SHOWN ON DRAWING)<br>**N/A** |
| LOAD/RATING REQUIREMENT<br>**N/A** |
| MATERIAL REQUIREMENT<br>**N/A** |
| PACKAGING REQUIREMENT<br>**N/A** |
| OTHER REQUIREMENTS |

*THIS DRAWING IS THE PROPERTY OF ADRIAN STEEL COMPANY AND IS NOT TO BE USED IN ANY MANNER DETRIMENTAL TO THE INTERESTS OF ADRIAN STEEL COMPANY*

PRINTED DOCUMENT IS UNCONTROLLED



## TOLERANCES & INSPECTION

*UNLESS OTHERWISE SPECIFIED*

**ALL BEND ANGLES ARE 90 DEGREES**

**ALL DIMENSIONS ARE IN INCHES.**

**REFERENCE DIMENSIONS (X.XXX) DO NOT REQUIRE INSPECTION**

| FEATURES | HOLES/SLOTS | ANGLES |
|---|---|---|
| 0.0 = ± .125 | 0.0 = ± .062 | 0° = ± 2° |
| 0.00 = ± .062 | 0.00 = ± .031 | 0.0° = ± 1° |
| 0.000 = ± .031 | 0.000 = ± .015 | |

**Material Thickness: per ASTM Std.**
**Weld Callouts per AWS**

## RELEASE & REVISIONS

INITIAL ECN: **25378**

CURRENT ECN: **25378**

ECN DESCRIPTION:

**RELEASE FOR PRODUCTION**

REVISED BY:

# PURCHASED COMPONENT

REFERENCED SUPPLIER AND/OR MANUFACTURER
**AAMP GLOBAL**

REFERENCED SUPPLIER AND/OR MANUFACTURER PART NUMBER
**SSW-HAR1 OR 67097**

COLOR (ONLY LIST IF COLOR SPECIFIC)

COMODITY ITEM (Y/N) (YES = ALL DIMENSIONS AND NOTES ARE REFERANCE)
(NOTE: DIMENSIONS AND FEATURES MAY VARY FOR A COMODITY ITEM.)
**NO**

## PART / PRODUCT IDENTIFICATION

**ADRIAN STEEL®**

**ADRIAN STEEL COMPANY**
**906 JAMES STREET, ADRIAN, MI 49221**

REVISION LEVEL **A**

MAT'L USED: **PURCHASED**

DESIGNED BY: **E.BURKE**

DESCRIPTION: **SWITCH HARNESS 1 EXTERIOR LIGHTING**

WEIGHT (Lbs.): **0.2**

SEGMENT CODE: **ELE**

PART NUMBER: **67097**

| Coverings | |
|---|---|
| Id | Assembly |
| [12] | |

| Notes | |
|---|---|
| 1 | Lock Tape Loom with Tesa 51608 |
| 2 | 75mm between end of loom and Quick Connects |

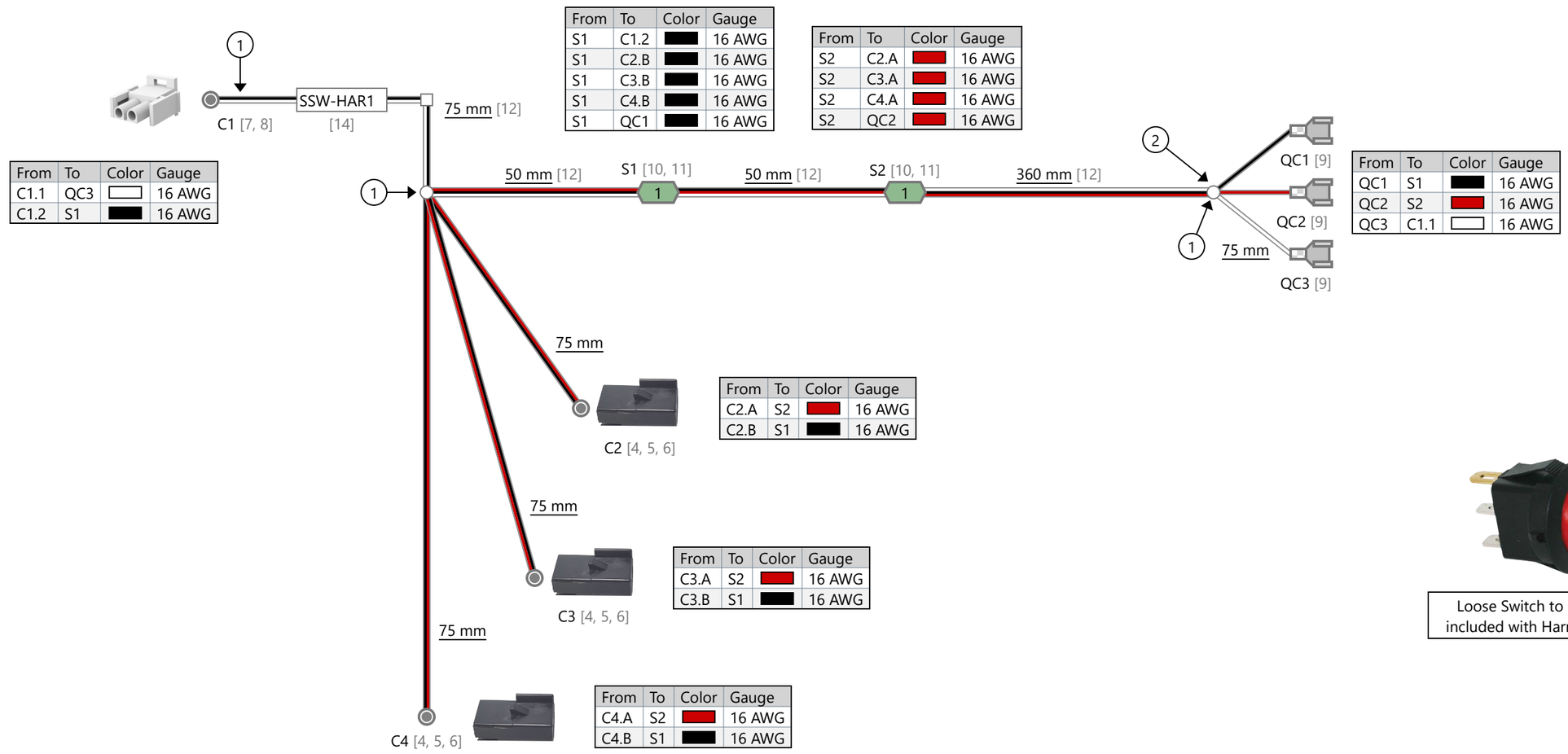


| From | To | Color | Gauge |
|---|---|---|---|
| C1.1 | QC3 | | 16 AWG |
| C1.2 | S1 | | 16 AWG |

| From | To | Color | Gauge |
|---|---|---|---|
| S1 | C1.2 | | 16 AWG |
| S1 | C2.B | | 16 AWG |
| S1 | C3.B | | 16 AWG |
| S1 | C4.B | | 16 AWG |
| S1 | QC1 | | 16 AWG |

| From | To | Color | Gauge |
|---|---|---|---|
| S2 | C2.A | | 16 AWG |
| S2 | C3.A | | 16 AWG |
| S2 | C4.A | | 16 AWG |
| S2 | QC2 | | 16 AWG |

| From | To | Color | Gauge |
|---|---|---|---|
| QC1 | S1 | | 16 AWG |
| QC2 | S2 | | 16 AWG |
| QC3 | C1.1 | | 16 AWG |

| From | To | Color | Gauge |
|---|---|---|---|
| C2.A | S2 | | 16 AWG |
| C2.B | S1 | | 16 AWG |

| From | To | Color | Gauge |
|---|---|---|---|
| C3.A | S2 | | 16 AWG |
| C3.B | S1 | | 16 AWG |

| From | To | Color | Gauge |
|---|---|---|---|
| C4.A | S2 | | 16 AWG |
| C4.B | S1 | | 16 AWG |

Loose Switch to be included with Harness

| Revisions | | | |
|---|---|---|---|
| Rev. | Date | Author | Description |
| A | 11/5/2021 | Bennet Fisher | Initial Drawing |

UNLESS OTHERWISE SPECIFIED

DIMENSIONS ARE IN MILLIMETERS [INCHES]
TOLERANCES: ±5MM

**PROPRIETARY AND CONFIDENTIAL**

THE INFORMATION CONTAINED IN THIS DRAWING IS THE SOLE PROPERTY OF AAMP GLOBAL. ANY REPRODUCTION IN PART OR AS A WHOLE WITHOUT THE WRITTEN PERMISSION OF AAMP GLOBAL IS PROHIBITED.

| | Name | Date |
|---|---|---|
| Designed By | Bennet Fisher | 11/5/2021 |
| Engineering Approval | ---- | ---- |
| Manufacturing Approval | ---- | ---- |
| Revision Approval | ---- | ---- |
| Quality Assurance | ---- | ---- |

AAMP
ADVANCING VEHICLE TECHNOLOGY

Part Number: SSW-HAR1

Revision: ----

Description:
Strobe Switch Harness - 3 Outputs

Sheet: 1 of 1

# PURCHASED COMPONENT KEY FEATURES

| DESCRIPTION OF REQUIREMENTS |
|---|
| DIMENSIONAL REQUIREMENTS (AS SHOWN ON DRAWING)<br>**N/A** |
| LOAD/RATING REQUIREMENT<br>**N/A** |
| MATERIAL REQUIREMENT<br>**N/A** |
| PACKAGING REQUIREMENT<br>**N/A** |
| OTHER REQUIREMENTS |

*THIS DRAWING IS THE PROPERTY OF ADRIAN STEEL COMPANY AND IS NOT TO BE USED IN ANY MANNER DETRIMENTAL TO THE INTERESTS OF ADRIAN STEEL COMPANY*

PRINTED DOCUMENT IS UNCONTROLLED



## TOLERANCES & INSPECTION

*UNLESS OTHERWISE SPECIFIED*

**ALL BEND ANGLES ARE 90 DEGREES**

**ALL DIMENSIONS ARE IN INCHES.**

**REFERENCE DIMENSIONS (X.XXX) DO NOT REQUIRE INSPECTION**

| FEATURES | HOLES/SLOTS | ANGLES |
|---|---|---|
| 0.0 = ± .125 | 0.0 = ± .062 | 0° = ± 2° |
| 0.00 = ± .062 | 0.00 = ± .031 | 0.0° = ± 1° |
| 0.000 = ± .031 | 0.000 = ± .015 | |

**Material Thickness: per ASTM Std.**
**Weld Callouts per AWS**

## RELEASE & REVISIONS

INITIAL ECN: **25378**

CURRENT ECN: **25378**

ECN DESCRIPTION:

**RELEASE FOR PRODUCTION**

REVISED BY:

# PURCHASED COMPONENT

REFERENCED SUPPLIER AND/OR MANUFACTURER
**AAMP GLOBAL**

REFERENCED SUPPLIER AND/OR MANUFACTURER PART NUMBER
**BLB-HAR2 OR 67112**

COLOR (ONLY LIST IF COLOR SPECIFIC)

COMODITY ITEM (Y/N) (YES = ALL DIMENSIONS AND NOTES ARE REFERANCE)
(NOTE: DIMENSIONS AND FEATURES MAY VARY FOR A COMODITY ITEM.)
**NO**

## PART / PRODUCT IDENTIFICATION

**ADRIAN STEEL®**

**ADRIAN STEEL COMPANY**
**906 JAMES STREET, ADRIAN, MI 49221**

REVISION LEVEL **A**

MAT'L USED: **PURCHASED**

DESIGNED BY: **E.BURKE**

DESCRIPTION: **BEACON/LIGHTBAR HARNESS 2**

WEIGHT (Lbs.): **0.2**

SEGMENT CODE: **EBE**

PART NUMBER: **67112**

## Bill of Materials

| Id | Type | Manufacturer | Part Number | Quantity |
|---|---|---|---|---|
| 1 | Cable | | 16AWG 2C FT2 TPU Cable | 5180 mm |
| 2 | Cord Grip | | PG11 | 1 |

## Notes

1. Heat shrink cable jacket and wire 20mm behind connector (Heat shrink = 38mm long)
2. Place adhesive lined heat shrink over C2 connector wire cavities and cable jacket (Heat shrink = 38mm long)
3. Install Cable Gland/Cord Grip 300mm behind C2
4. Plug C3 into C2
5. C3 Cavities are sealed

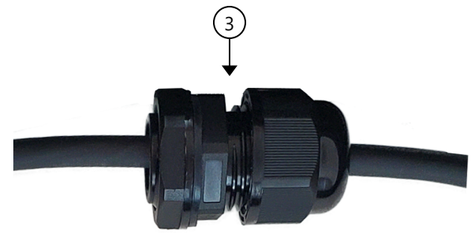


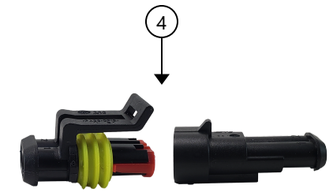

| From | To | Color | Gauge |
|---|---|---|---|
| C1.A | C2.1 | | 16 AWG |
| C1.B | C2.2 | | 16 AWG |

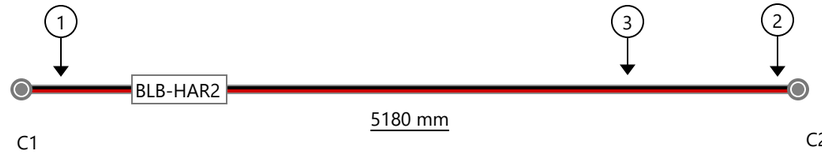

| From | To | Color | Gauge |
|---|---|---|---|
| C2.1 | C1.A | | 16 AWG |
| C2.2 | C1.B | | 16 AWG |

## Revisions

| Rev. | Date | Author | Description |
|---|---|---|---|
| | 11/5/2021 | Bennet Fisher | Initial Drawing |
| | 3/21/2022 | Bennet Fisher | Added 300mm to harness; changed female connector |
| A | 4/26/2022 | Bennet Fisher | Added adhesive lined heat shrink to C2 |

UNLESS OTHERWISE SPECIFIED
DIMENSIONS ARE IN MILLIMETERS [INCHES]
TOLERANCES: ±5MM

**PROPRIETARY AND CONFIDENTIAL**

THE INFORMATION CONTAINED IN THIS DRAWING IS THE SOLE PROPERTY OF AAMP GLOBAL. ANY REPRODUCTION IN PART OR AS A WHOLE WITHOUT THE WRITTEN PERMISSION OF AAMP GLOBAL IS PROHIBITED.

| | Name | Date |
|---|---|---|
| Designed By | Bennet Fisher | 04/26/2022 |
| Engineering Approval | | |
| Manufacturing Approval | | |
| Revision Approval | | |
| Quality Assurance | | |

AAMP
ADVANCING VEHICLE TECHNOLOGY

Part Number: BLB-HAR2_
Revision: A
Description: Beacon/Light Bar Harness - 5.18 Meters
Sheet: 1

# PURCHASED COMPONENT KEY FEATURES

**DESCRIPTION OF REQUIREMENTS**

DIMENSIONAL REQUIREMENTS (AS SHOWN ON DRAWING)

**N/A**

LOAD/RATING REQUIREMENT

**N/A**

MATERIAL REQUIREMENT

**N/A**

PACKAGING REQUIREMENT

**N/A**

OTHER REQUIREMENTS

**ECCO LIGHTBAR: 550CA**
**WITH PLUG AND PLAY CONNECTOR**
**AMBER LEDS WITH CLEAR LENS**

*THIS DRAWING IS THE PROPERTY OF ADRIAN STEEL COMPANY AND IS NOT TO BE USED IN ANY MANNER DETRIMENTAL TO THE INTERESTS OF ADRIAN STEEL COMPANY*

PRINTED DOCUMENT IS UNCONTROLLED



## TOLERANCES & INSPECTION

*UNLESS OTHERWISE SPECIFIED*

**ALL BEND ANGLES ARE 90 DEGREES**

**ALL DIMENSIONS ARE IN INCHES.**

**REFERENCE DIMENSIONS (X.XXX) DO NOT REQUIRE INSPECTION**

| FEATURES | HOLES/SLOTS | ANGLES |
|---|---|---|
| 0.0 = ± .125 | 0.0 = ± .062 | 0° = ± 2° |
| 0.00 = ± .062 | 0.00 = ± .031 | 0.0° = ± 1° |
| 0.000 = ± .031 | 0.000 = ± .015 | |

**Material Thickness: per ASTM Std.**
**Weld Callouts per AWS**

## RELEASE & REVISIONS

**INITIAL ECN:** 25921

**CURRENT ECN:** 25921

ECN DESCRIPTION:

**RELEASE TO PRODUCTION**

REVISED BY: **N/A**

# PURCHASED COMPONENT

REFERENCED SUPPLIER AND/OR MANUFACTURER
**ECCO**

REFERENCED SUPPLIER AND/OR MANUFACTURER PART NUMBER
**5550CA-ADR**

COLOR (ONLY LIST IF COLOR SPECIFIC)
**CLEAR LENS/AMBER LEDS**

COMODITY ITEM (Y/N) (YES = ALL DIMENSIONS AND NOTES ARE REFERANCE)
(NOTE: DIMENSIONS AND FEATURES MAY VARY FOR A COMODITY ITEM.)
**NO**

## PART / PRODUCT IDENTIFICATION

**ADRIAN STEEL®**

**ADRIAN STEEL COMPANY**
**906 JAMES STREET, ADRIAN, MI 49221**

REVISION LEVEL **A**

MAT'L USED: **PURCHASED**

DESIGNED BY: **EMB**

DESCRIPTION: **ECCO LGTBAR 5550 W/CONN**

WEIGHT (Lbs.): **5.00**

SEGMENT CODE: **EBE**

PART NUMBER: **67691**

# PURCHASED COMPONENT KEY FEATURES

**DESCRIPTION OF REQUIREMENTS**

DIMENSIONAL REQUIREMENTS (AS SHOWN ON DRAWING)

**N/A**

LOAD/RATING REQUIREMENT

**N/A**

MATERIAL REQUIREMENT

**N/A**

PACKAGING REQUIREMENT

**N/A**

OTHER REQUIREMENTS

**RUBBER GROMMET:**
**MCMASTER-CARR 9600K33**

**INNER DIAMATER: 3/8"**
**PANEL HOLE DIAMETER: 7/16"**
**PANEL THICKNESS: 3/23"**

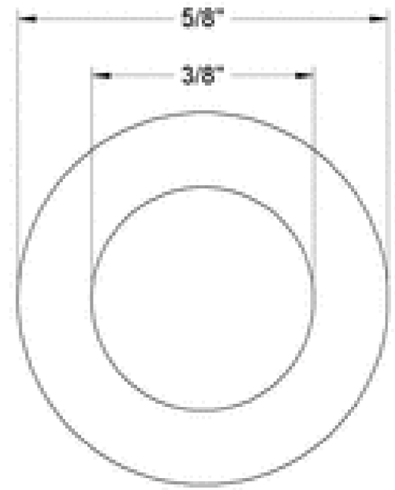

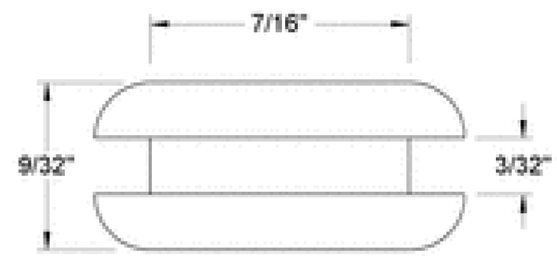


*THIS DRAWING IS THE PROPERTY OF ADRIAN STEEL COMPANY AND IS NOT TO BE USED IN ANY MANNER DETRIMENTAL TO THE INTERESTS OF ADRIAN STEEL COMPANY*

PRINTED DOCUMENT IS UNCONTROLLED



## TOLERANCES & INSPECTION

*UNLESS OTHERWISE SPECIFIED*

**ALL BEND ANGLES ARE 90 DEGREES**

**ALL DIMENSIONS ARE IN INCHES.**

**REFERENCE DIMENSIONS (X.XXX) DO NOT REQUIRE INSPECTION**

| FEATURES | HOLES/SLOTS | ANGLES |
|---|---|---|
| 0.0 = ± .125 | 0.0 = ± .062 | 0° = ± 2° |
| 0.00 = ± .062 | 0.00 = ± .031 | 0.0° = ± 1° |
| 0.000 = ± .031 | 0.000 = ± .015 | |

**Material Thickness: per ASTM Std.**
**Weld Callouts per AWS**

## RELEASE & REVISIONS

INITIAL ECN: **26411**

CURRENT ECN: **26411**

ECN DESCRIPTION:

**RELEASE TO PRODUCTION**

REVISED BY: **N/A**

# PURCHASED COMPONENT

REFERENCED SUPPLIER AND/OR MANUFACTURER
**MCMASTR-CARR**

REFERENCED SUPPLIER AND/OR MANUFACTURER PART NUMBER
**9600K33**

COLOR (ONLY LIST IF COLOR SPECIFIC)
**BLACK/RUBBER**

COMODITY ITEM (Y/N) (YES = ALL DIMENSIONS AND NOTES ARE REFERANCE)
(NOTE: DIMENSIONS AND FEATURES MAY VARY FOR A COMODITY ITEM.)
**NO**

## PART / PRODUCT IDENTIFICATION

**ADRIAN STEEL®**

**ADRIAN STEEL COMPANY**
**906 JAMES STREET, ADRIAN, MI 49221**

REVISION LEVEL **A**

MAT'L USED: **PURCHASED**

DESIGNED BY: **EMB**

DESCRIPTION: **GROMMET,3/8"ID 7/16"OD**

WEIGHT (Lbs.): **0.01**

SEGMENT CODE: **EBE**

PART NUMBER: **70805**

# PURCHASED COMPONENT KEY FEATURES

**DESCRIPTION OF REQUIREMENTS**

DIMENSIONAL REQUIREMENTS (AS SHOWN ON DRAWING)

**N/A**

LOAD/RATING REQUIREMENT

**N/A**

MATERIAL REQUIREMENT

**N/A**

PACKAGING REQUIREMENT

**N/A**

OTHER REQUIREMENTS

**Length: 19"**
**Width: 14"**
**Height of highest part: 3.5"**

**CANNOT MOUNT CERTAIN LIGHTBARS ON IT since it's too thin**

*THIS DRAWING IS THE PROPERTY OF ADRIAN STEEL COMPANY AND IS NOT TO BE USED IN ANY MANNER DETRIMENTAL TO THE INTERESTS OF ADRIAN STEEL COMPANY*

PRINTED DOCUMENT IS UNCONTROLLED



## TOLERANCES & INSPECTION

*UNLESS OTHERWISE SPECIFIED*

**ALL BEND ANGLES ARE 90 DEGREES**

**ALL DIMENSIONS ARE IN INCHES.**

**REFERENCE DIMENSIONS (X.XXX) DO NOT REQUIRE INSPECTION**

| FEATURES | HOLES/SLOTS | ANGLES |
|---|---|---|
| 0.0 = ± .125 | 0.0 = ± .062 | 0° = ± 2° |
| 0.00 = ± .062 | 0.00 = ± .031 | 0.0° = ± 1° |
| 0.000 = ± .031 | 0.000 = ± .015 | |

**Material Thickness: per ASTM Std.**
**Weld Callouts per AWS**

## RELEASE & REVISIONS

INITIAL ECN: **29316**

CURRENT ECN: **29316**

ECN DESCRIPTION:

**Release for Market Fill**

REVISED BY: **MLH**

## PURCHASED COMPONENT

REFERENCED SUPPLIER AND/OR MANUFACTURER
**Acari**

REFERENCED SUPPLIER AND/OR MANUFACTURER PART NUMBER
**FORM-CT-BZ**

COLOR (ONLY LIST IF COLOR SPECIFIC)

COMMODITY ITEM (Y/N) (YES = ALL DIMENSIONS AND NOTES ARE REFERANCE)
(NOTE: DIMENSIONS AND FEATURES MAY VARY FOR A COMODITY ITEM.)
**NO**

## PART / PRODUCT IDENTIFICATION

**ADRIAN STEEL®**

ADRIAN STEEL COMPANY
906 JAMES STREET, ADRIAN, MI 49221

REVISION LEVEL **A**

MAT'L USED:

DESIGNED BY: **MLH**

DESCRIPTION: **MOUNT, DRILL,LOW, TRAX**

WEIGHT (Lbs.): **1.00**

SEGMENT CODE: **EBE**

PART NUMBER: **80681**