Introduction / Comments:

Install Instructions Ladder Rack Lighting for Promaster Vans

Note:

Read all instructions prior to installation. Review the Adrian Steel **GENERAL PRECAUTIONS PAGES (56638**) before attempting installation. Only personnel familiar with using electrical best practices should perform this install. Reference **ELECTRICAL BEST PRACTICES MANUAL (54479)** before attempting installation.

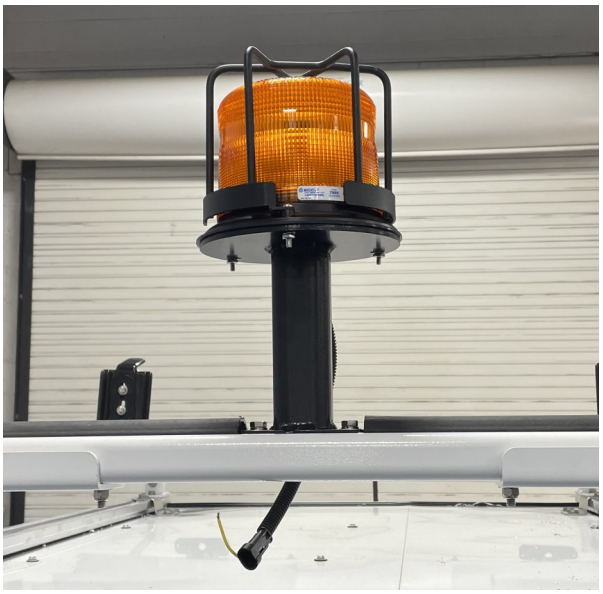

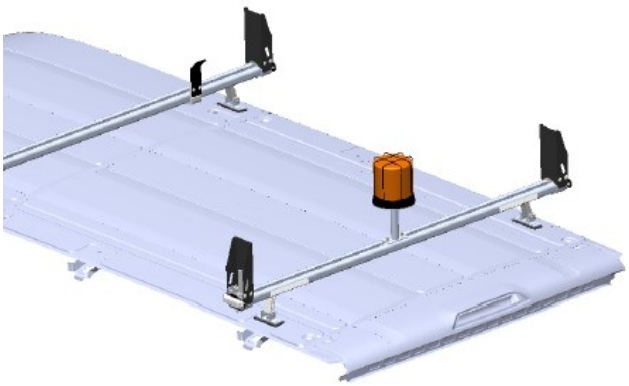

Installation Instructions Ladder Rack Lighting For Promaster Vans

Table of Contents:

Torque Requirements……..……..2

Introduction Statement……..……3

Overall Harness Diagram……..3

Tools Needed……...3

Harnesses/Components Needed ……...……..…4

Fastener Bags Needed……..…10

Cross Bow/Strobe Harness Diagram Example……..…11

Component Placements……...……12

Overall Harness Routing……..13

Beginning Install……....16

Utility Rack 4 Corner Strobes Install……..20

Stowed Beacon Install—All Racks……..……...22

Drive-A-Way Vehicle Beacon Install—All Racks……..23

Grip And Prolift 4 Corner Strobes Install……24

Front And Rear Strobes Install—All Racks……26

After Ladder Rack Mounting—Drilling In Roof……..28

Finishing Install……...……...30

*****TORQUE*****
Torque all strobe fasteners to 10 in-lbs.
DO NOT OVER TIGHTEN

DO NOT MOUNT ON A CURVED SURFACE

<u>Please read statement below before moving forward**</u>**

<u>Before installation, disconnect the OEM's negative battery cable.</u>

These plug and play kits are completely modular and can be configured in many different ways. Placement of lights will be determined by sales order drawings/customer ask. Therefore, these instructions are for the most standard configurations, and for reference only.

Please reference the order drawing and spec sheet to see what components are going to be installed on this particular upfit.

These installation instructions are for most cases and for reference. Not all installs will have strobes, beacons, and lightbars. Reference the instructions for only what you are installing.

Overall Harness Diagram

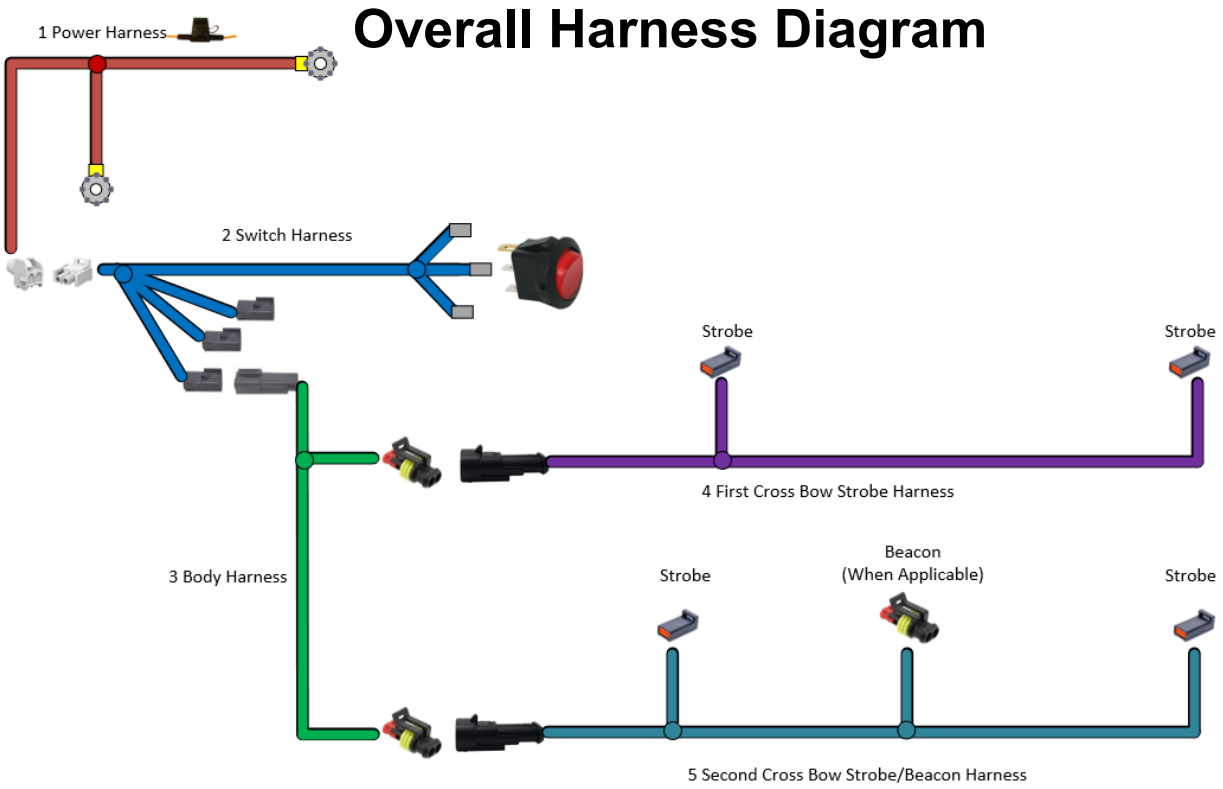

Tools required:

13mm and 10mm socket and wrenches

Phillips #1 and #3 bit,

1/2" drill bit and 5/16" step drill bit

Power drill and impact

Torque wrench

Trim tools

Parts Reference—Only If Needed. Kit Numbers: Kit Type: Product Structures

Promaster Low Roof Ladder Rack Lighting Harnesses

71001: 4 Corner Strobes On Utility Rack

Num	Q	Part Number	Description
1	1	67094	Power Harness Exterior #3
2	1	67100	Switch Harness Exterior #4
3	1	67605	Body Harness Exterior #2
4/5	2	67615	Strobe Harness For 68” Rack

71002: Front And Rear Strobes On Utility Rack

Num	Q	Part Number	Description
1	1	67094	Power Harness Exterior #3
2	1	67100	Switch Harness Exterior #4
3	1	67605	Body Harness Exterior #2
4/5	2	67616	Strobe Harn Front/Rear 58”/68” Rack

71003: 4 Corner Strobes And Beacon On Utility Rack

Num	Q	Part Number	Description
1	1	67094	Power Harness Exterior #3
2	1	67100	Switch Harness Exterior #4
3	1	67605	Body Harness Exterior #2
4	1	67614	Strobe Harness For 58” Rack
5	1	67618	Strobe/Beacon Harn For 58” Rack

71004: Front And Rear Strobes With Beacon On Utility Rack

Num	Q	Part Number	Description
1	1	67094	Power Harness Exterior #3
2	1	67100	Switch Harness Exterior #4
3	1	67605	Body Harness Exterior #2
4	1	67616	Strobe Harn Front/Rear 58”/68” Rack
5	1	67620	Strobe/ Beacon Harn Front/Rear 58”/68” Rack

71057: Beacon Only On Utility Rack And Prolift

Num	Q	Part Number	Description
1	1	67094	Power Harness Exterior #3
2	1	67100	Switch Harness Exterior #4
3	1	67605	Body Harness Exterior #2
5	1	67622	Beacon Harness For 58”/68” Rack

71009: 4 Corner Strobes On Prolift Ladder Rack

Num	Q	Part Number	Description
1	1	67094	Power Harness Exterior #3
2	1	67100	Switch Harness Exterior #4
3	1	67607	Body Harness Exterior #3
4/5	2	67615	Strobe Harness For 68” Rack

71010: Front And Rear Strobes On Prolift Ladder Rack

Num	Q	Part Number	Description
1	1	67094	Power Harness Exterior #3
2	1	67100	Switch Harness Exterior #4
3	1	67607	Body Harness Exterior #3
4/5	2	67616	Strobe Harn Fr/Rr 58”/68” Rack

71011: 4 Corner Strobes And Beacon On Prolift Ladder Rack

Num	Q	Part Number	Description
1	1	67094	Power Harness Exterior #3
2	1	67100	Switch Harness Exterior #4
3	1	67607	Body Harness Exterior #3
4	1	67614	Strobe Harness For 58” Rack
5	1	67618	Strobe/Beacon Harn For 58” Rack

71012: Front/Rear Strobes And Beacon On Prolift Ladder Rack

Num	Q	Part Number	Description
1	1	67094	Power Harness Exterior #3
2	1	67100	Switch Harness Exterior #4
3	1	67607	Body Harness Exterior #3
4	1	67616	Strobe Harn Fr/Rr 58”/68” Rack
5	1	67620	Strobe/ Beacon Harn Front/Rear 58”/68” Rack

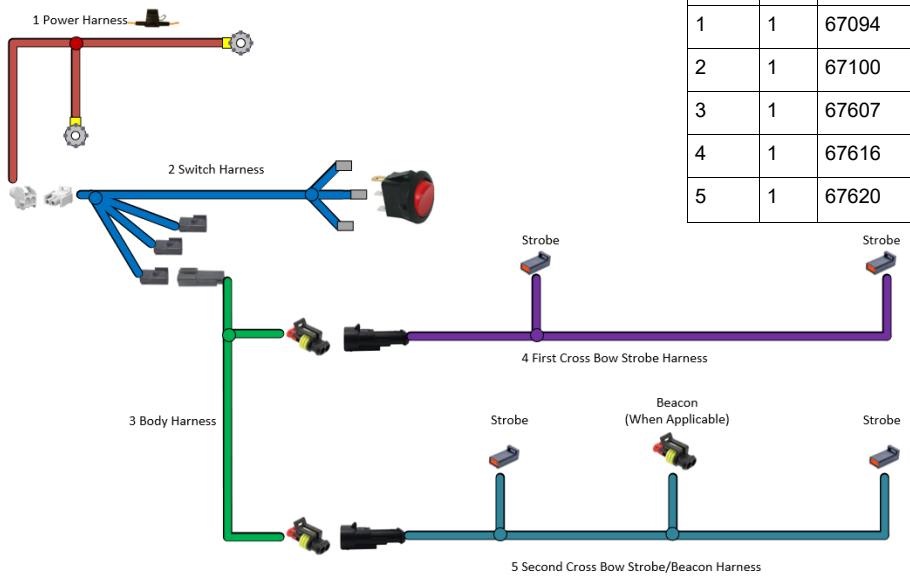

Promaster Low Roof Ladder Rack Brackets And Bags

71001: 4 Corner Strobes On Utility Rack

Num	Q	Part Number	Description
N/A	1	BAG66095	Bag For Strobes On Utility Rack
1	4	67686	Ecco Plug And Play Strobes
2	4	66103-B	Strobe BRacket For Utility Rack

71009: 4 Corner Strobes On Prolift

Num	Q	Part Number	Description
N/A	1	BAG70965	Bag For Strobes On Grip/ Prolift
1	4	67686	Ecco Plug And Play Strobes
4	4	67136-B	Strobe BRacket For Prolift

71003: 4 Corner Strobes And Beacon On Utility Rack

Num	Q	Part Number	Description
N/A	1	BAG66095	Bag For Strobes On Utility Rack
N/A	1	BAG66092	Bag For Beacon On Utility Rack
1	4	67686	Ecco Plug And Play Strobes
2	4	66103-B	Strobe BRacket For Utility Rack
6	1	70970	Beacon Assembly Kit—Boxed

71011: 4 Corner Strobes And Beacon On Prolift

Num	Q	Part Number	Description
N/A	1	BAG70965	Bag For Strobes On Grip/ Prolift
N/A	1	BAG66092	Bag For Beacon On Utility Rack
1	4	67686	Ecco Plug And Play Strobes
4	4	67136-B	Strobe BRacket For Prolift
6	1	70970	Beacon Assembly Kit—Boxed

71057: Beacon Only On Utility Rack And Prolift

Num	Q	Part Number	Description
N/A	1	BAG66092	Bag For Beacon On Utility Rack
6	1	70970	Beacon Assembly Kit—Boxed

71002 / 71010: Front And Rear Strobes On Utility Rack And Prolift

Num	Q	Part Number	Description
N/A	1	BAG70965	Bag For Strobes On Grip/ Prolift
1	4	67686	Ecco Plug And Play Strobes
5	4	67824-B	Front/Rear Strobe BRacket All Racks

71004 / 71012: Front And Rear Strobes With Beacon On Utility Rack And Prolift

Num	Q	Part Number	Description
N/A	1	BAG70965	Bag For Strobes On Grip/ Prolift
N/A	1	BAG66092	Bag For Beacon On Utility Rack
1	4	67686	Ecco Plug And Play Strobes
5	4	67824-B	Front/Rear Strobe BRacket All Racks
6	1	70970	Beacon Assembly Kit—Boxed

1	2	3	4	5	6
		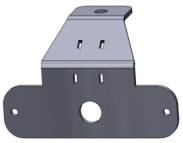	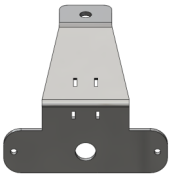		

Parts Reference—Only If Needed. Kit Numbers: Kit Type: Product Structures

Promaster High Roof Ladder Rack Lighting Harnesses

71005: 4 Corner Strobes On Prolift Ladder Rack

Num	Q	Part Number	Description
1	1	67094	Power Harness Exterior #3
2	1	67100	Switch Harness Exterior #4
3	1	67603	Body Harness Exterior #1
4/5	2	67614	Strobe Harness For 58” Rack

71006: Front And Rear Strobes On Prolift Ladder Rack

Num	Q	Part Number	Description
1	1	67094	Power Harness Exterior #3
2	1	67100	Switch Harness Exterior #4
3	1	67603	Body Harness Exterior #1
4/5	2	67616	Strobe Harn Front/Rear 58”/68” Rack

71059: Beacon Only On Prolift Ladder Rack

Num	Q	Part Number	Description
1	1	67094	Power Harness Exterior #3
2	1	67100	Switch Harness Exterior #4
3	1	67603	Body Harness Exterior #1
5	1	67622	Beacon Harness For 58”/68” Rack

71007: 4 Corner Strobes And Beacon On Prolift Ladder Rack

Num	Q	Part Number	Description
1	1	67094	Power Harness Exterior #3
2	1	67100	Switch Harness Exterior #4
3	1	67603	Body Harness Exterior #1
4	1	67614	Strobe Harness For 58” Rack
5	1	67618	Strobe/Beacon Harn For 58” Rack

71008: Front/Rear Strobes And Beacon On Prolift Ladder Rack

Num	Q	Part Number	Description
1	1	67094	Power Harness Exterior #3
2	1	67100	Switch Harness Exterior #4
3	1	67603	Body Harness Exterior #1
4	1	67616	Strobe Harn Fr/Rr 58”/68” Rack
5	1	67620	Strobe/ Beacon Harn Front/ Rear 58”/68” Rack

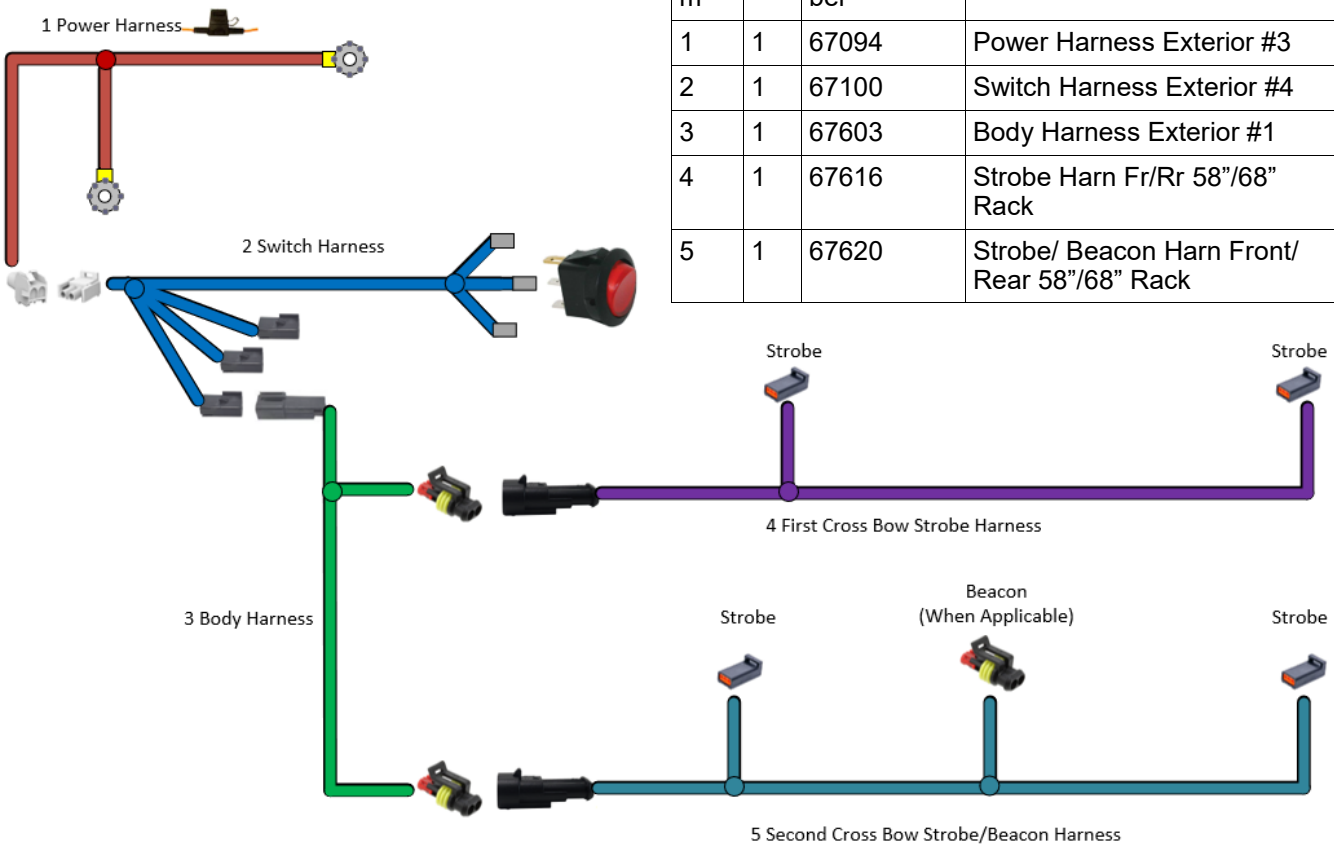

Promaster High Roof Ladder Rack Brackets And Bags

71005: 4 Corner Strobes On Prolift

Num	Q	Part Number	Description
N/A	1	BAG70965	Bag For Strobes On Grip/ Prolift
1	4	67686	Ecco Plug And Play Strobes
4	4	67136-B	Strobe BRacket For Prolift

71007: 4 Corner Strobes And Beacon On Prolift

Num	Q	Part Number	Description
N/A	1	BAG70965	Bag For Strobes On Grip/ Prolift
N/A	1	BAG66092	Bag For Beacon On Utility Rack
1	4	67686	Ecco Plug And Play Strobes
4	4	67136-B	Strobe BRacket For Prolift
6	1	70970	Beacon Assembly Kit—Boxed

71059: Beacon Only On Prolift Rack

Num	Q	Part Number	Description
N/A	1	BAG66092	Bag For Beacon On Utility Rack
6	1	70970	Beacon Assembly Kit—Boxed

71006: Front And Rear Strobes On Prolift Rack

Num	Q	Part Number	Description
N/A	1	BAG70965	Bag For Strobes On Grip/ Prolift
1	4	67686	Ecco Plug And Play Strobes
5	4	67824-B	Front/Rear Strobe BRacket All Racks

71008: Front And Rear Strobes With Beacon On Prolift Rack

Num	Q	Part Number	Description
N/A	1	BAG70965	Bag For Strobes On Grip/ Prolift
N/A	1	BAG66092	Bag For Beacon On Utility Rack
1	4	67686	Ecco Plug And Play Strobes
5	4	67824-B	Front/Rear Strobe BRacket All Racks
6	1	70970	Beacon Assembly Kit—Boxed

1	2	3	4	5	6
		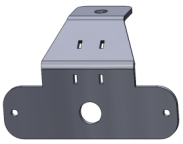	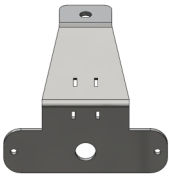		

Promaster Low Roof Half/Half Ladder Rack Lighting Harnesses

Parts Reference—Only If Needed. Kit Numbers: Kit Type: Product Structures

71539: 4 Corner Strobes: Half Utility / Half Prolift

Num	Q	Part Number	Description
1	1	67094	Power Harness Exterior #3
2	1	67100	Switch Harness Exterior #4
3	1	67607	Body Harness Exterior #3
4/5	2	67614	Strobe Harness For 58” Rack

71540: 4 Corner Strobes With Beacon: Half Utility / Half Prolift

Num	Q	Part Number	Description
1	1	67094	Power Harness Exterior #3
2	1	67100	Switch Harness Exterior #4
3	1	67607	Body Harness Exterior #3
4	1	67614	Strobe Harness For 58” Rack
5	1	67618	Strobe/Beacon Harn For 58” Rack

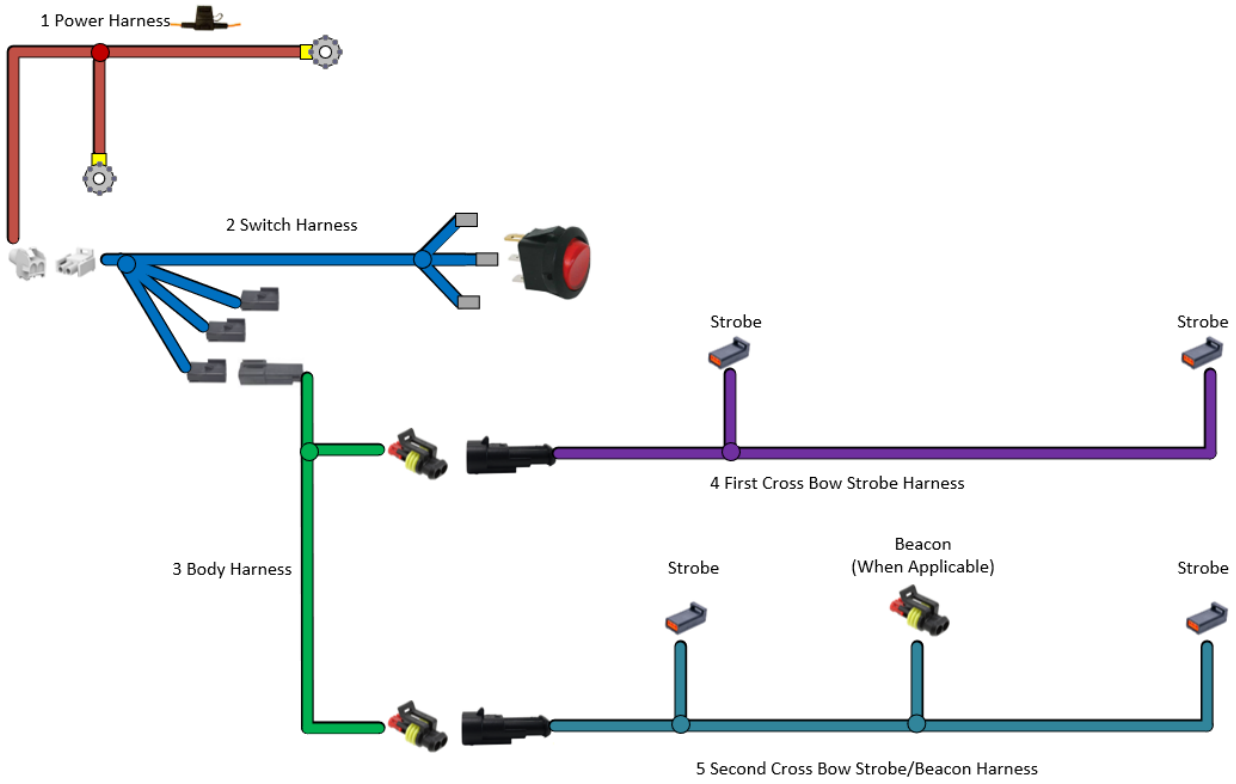

Promaster Low Roof Half/Half Ladder Rack Brackets And Bags

71539: 4 Corner Strobes: Half Utility / Half Prolift

Num	Q	Part Number	Description
N/A	1	BAG66095	Bag For Strobes On Utility Rack
N/A	1	BAG70965	Bag For Strobes On Grip/Prolift
1	4	67686	Ecco Plug And Play Strobes
2	2	66103-B	Strobe Bracket For Utility Rack
4	2	67136-B	Strobe Bracket For Prolift

71540: 4 Corner Strobes With Beacon: Half Utility / Half Prolift

Num	Q	Part Number	Description
N/A	1	BAG66095	Bag For Strobes On Utility Rack
N/A	1	BAG66092	Bag For Beacon On Utility Rack
N/A	1	BAG70965	Bag For Strobes On Grip/Prolift
1	4	67686	Ecco Plug And Play Strobes
2	2	66103-B	Strobe Bracket For Utility Rack
4	2	67136-B	Strobe Bracket For Prolift
6	1	70970	Beacon Assembly Kit—Boxed

1	2	3	4	5	6
		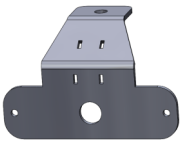	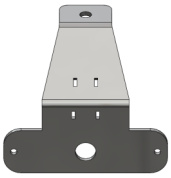		

Fastener Bags

Note: Not all components in the bags will be used on every install

BAG66095 For utility Rack strobe kit only:

ITEM NO.	PART NUMBER	DESCRIPTION	QTY.
1	BAG0406-A	4" x 6" 3MIL AUTOBAG	1
2	FAS0501	NUT,HEX NLK 8-32 SS	8
3	FAS0502	SCREW,FHPSD 12-14X1.00 SS	8
4	FAS0503	SCREW,RHP 8-32X.75 SS	8
5	65314	Vented Plastic Submersible Cord Grip	2
6	66843	Nylon Clamp 3/8" ID	14
7	FAS0842	SCREW,FHP TEK 18-8X.5 SS	14

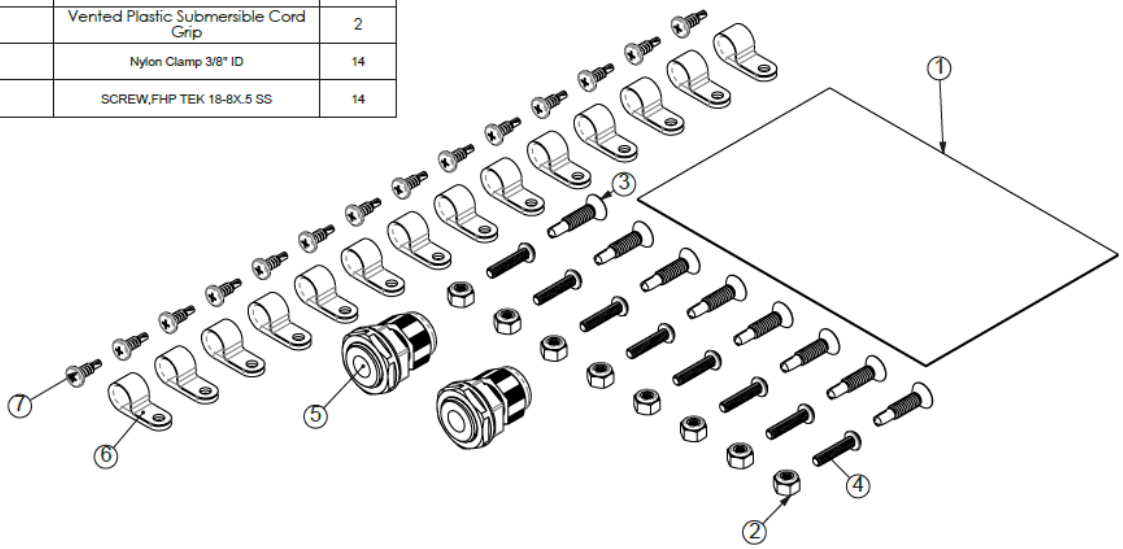

BAG66092 For all ladder Rack beacon kits:

ITEM NO.	PART NUMBER	DESCRIPTION	QTY.
1	BAG0406-A	4" x 6" 3MIL AUTOBAG	1
2	35335-0	SLIDE, 1.5" / AD RAIL	2
3	FAS0799	Screw, Hex Hd, 5/16-18x0.75 SS	2
4	FAS0588	Washer, Lock, Split, 5/16, SS	2
5	FAS0552	Washer, Flat, 5/16, SST	2
6	66843	Nylon Clamp 3/8" ID	7
7	FAS0842	SCREW,FHP TEK 18-8X.5 SS	7
8	64831	REAR ROLLER, SPACER	1
9	65314	Vented Plastic Submersible Cord Grip	1

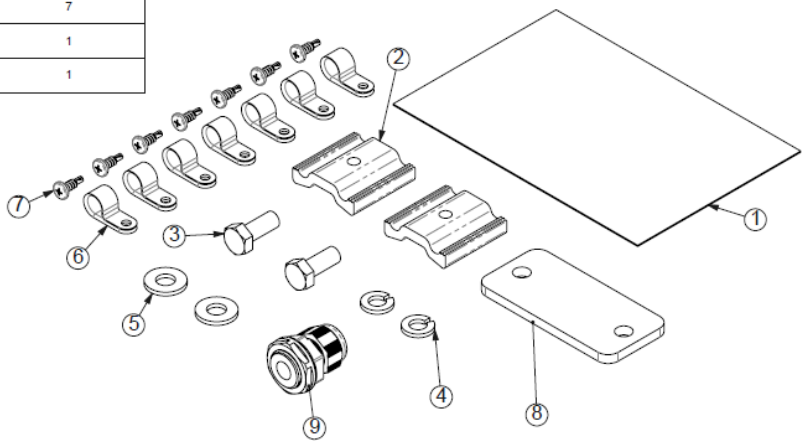

BAG70965 For all grip lock and prolift Rack strobe kits -4 corner strobes and front / rear strobes:

ITEM NO.	PART NUMBER	DESCRIPTION	QTY.
1	BAG0406-A	4" x 6" 3MIL AUTOBAG	1
2	FAS0501	NUT,HEX NLK 8-32 SS	8
3	FAS0503	SCREW,RHP 8-32X.75 SS	8
4	66843	Nylon Clamp 3/8" ID	16
5	FAS0842	SCREW,FHP TEK 18-8X.5 SS	16
6	FAS0398	BOLT,CRG 5/16-18X1.0 SS	8
7	63933	UTILITY, COM MOUNT PLATE	4
8	FAS0861	NUT,HEX NLK FLG 5/16-18SS	8

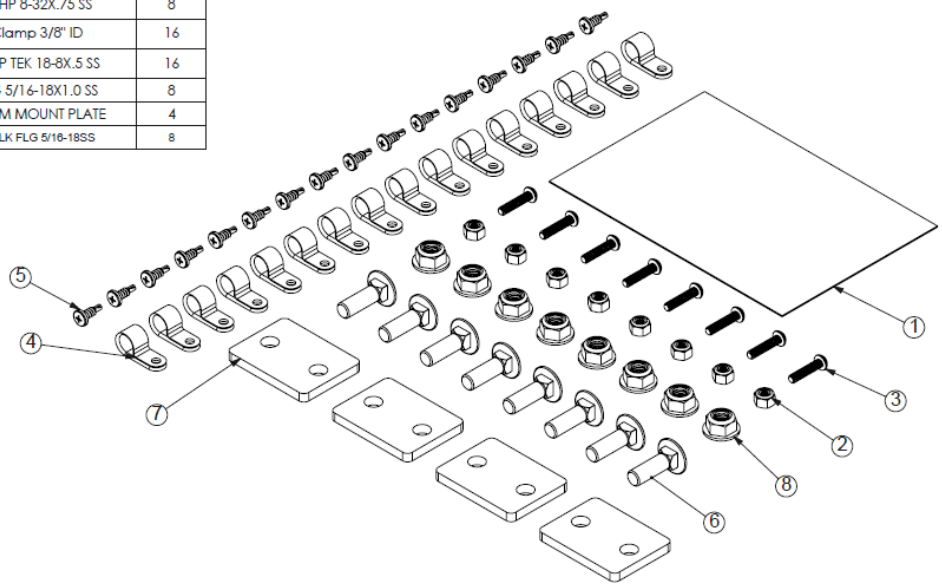

****Important note: Installing the beacon hardware, strobes, and wiring may be much easier to do before installing anything onto the ladder Rack cross bows. Also, before installation of the ladder Rack to the vehicle.****

67618 Cross Bow Harness Reference Diagram:

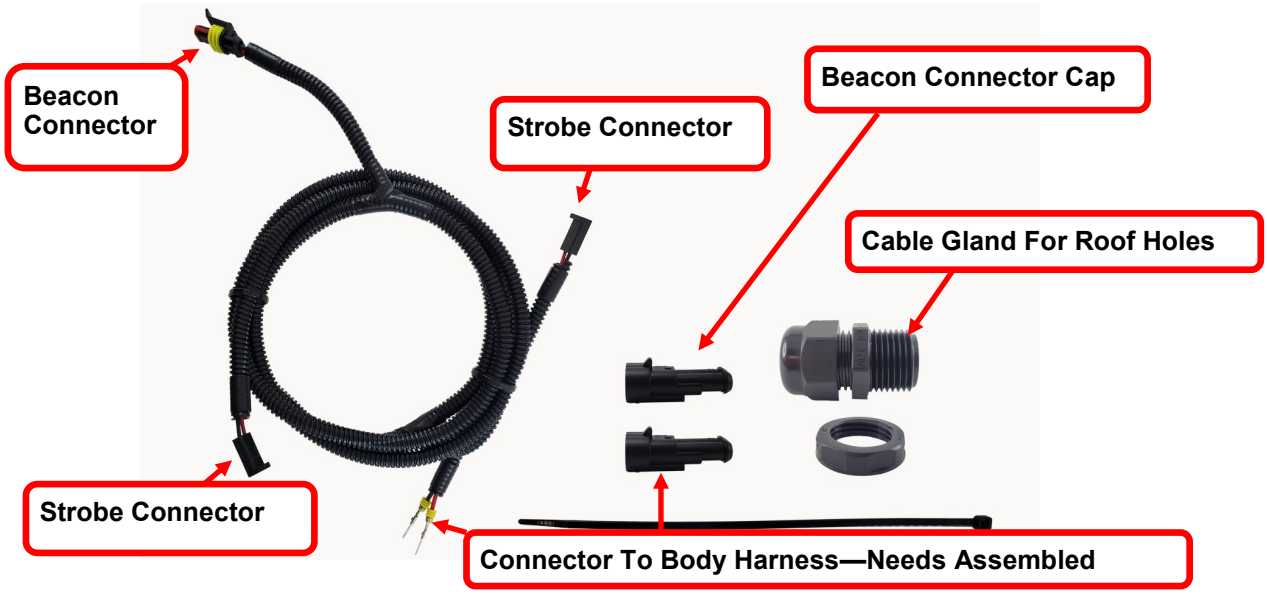

Placements

Switch placement: Under Radio On Dash

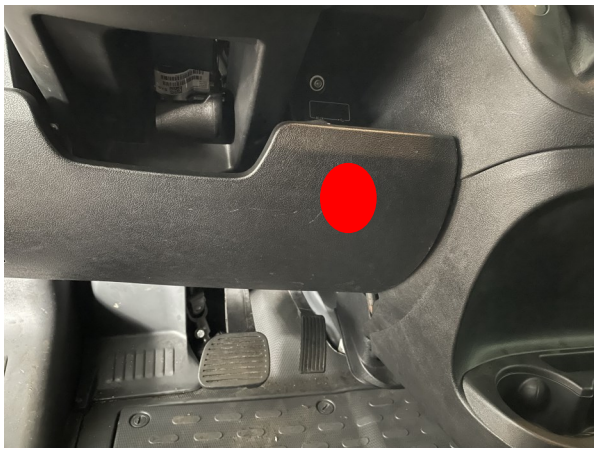

Corner Strobes: On Corners Of All Ladder Rack Cross Bows

*****TORQUE STROBES TO 10-IN-LB'S MAXIMUM*****

Beacon: Middle Of Rear Cross Bow

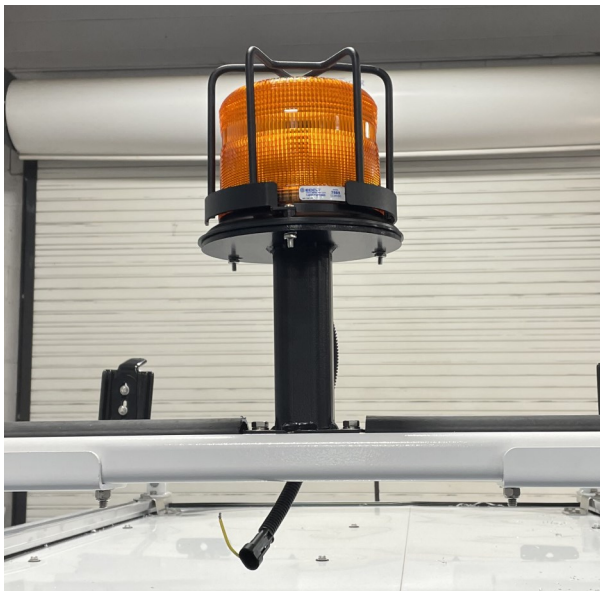

Front / Rear Strobes: Middle Of Cross Bows

The purpose of plug and play lighting is to be completely modular. Due to this feature, refer to the order drawing for all exact lighting placements. These installation instructions are for most cases and for reference. Not all installs will have strobes or beacons. Reference the instructions for only what you are installing.

Routing Overview

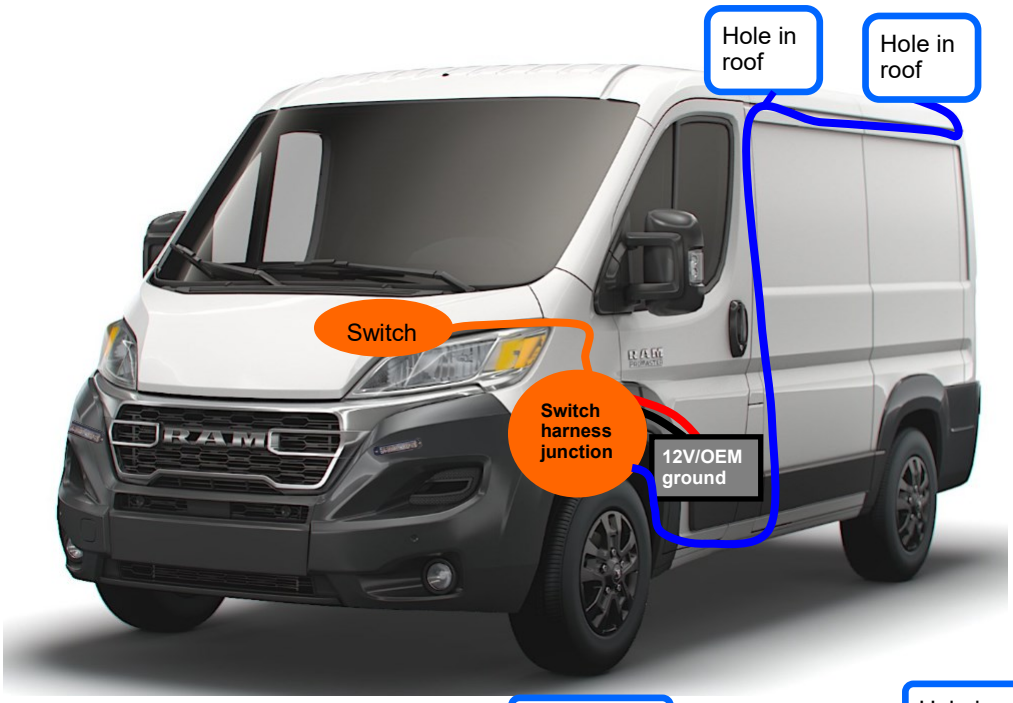

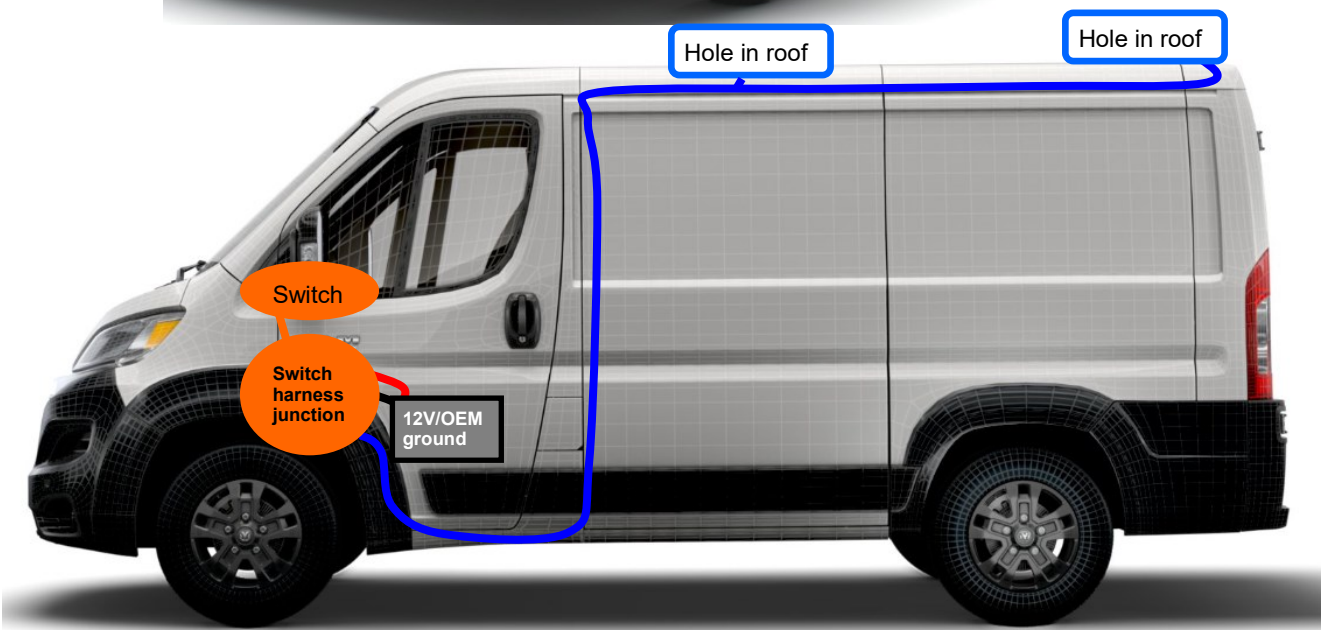

Color	Key - Items
Red/Black	Power harness: Battery to kick panel
Orange	Switch harness: Switch in dash
Blue	Body Harness: Switch to ladder Rack harnesses

Corner Strobes Routing: All Racks

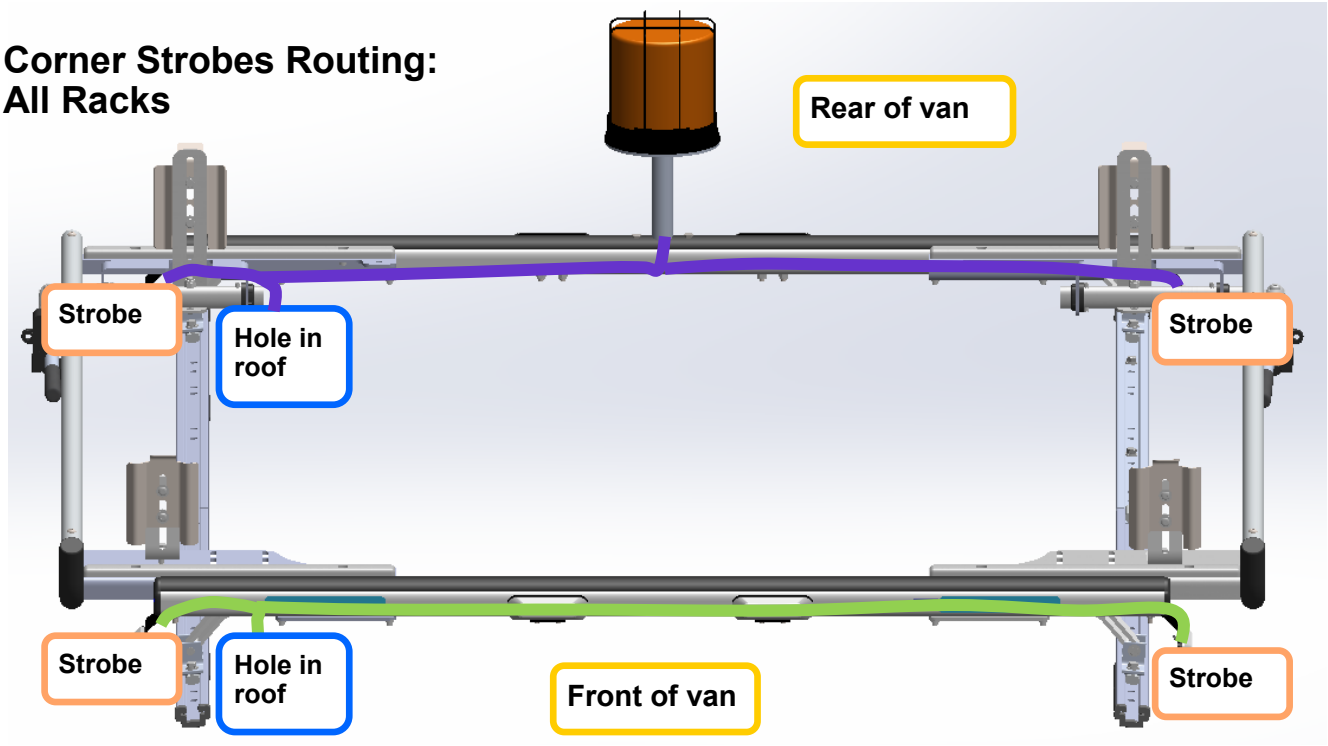

Color	Key - Items
Green	Front Cross Bow Strobe Harness
Purple	Rear Cross Bow Strobe / Beacon Harness

Front/Rear Strobe Routing: All Racks

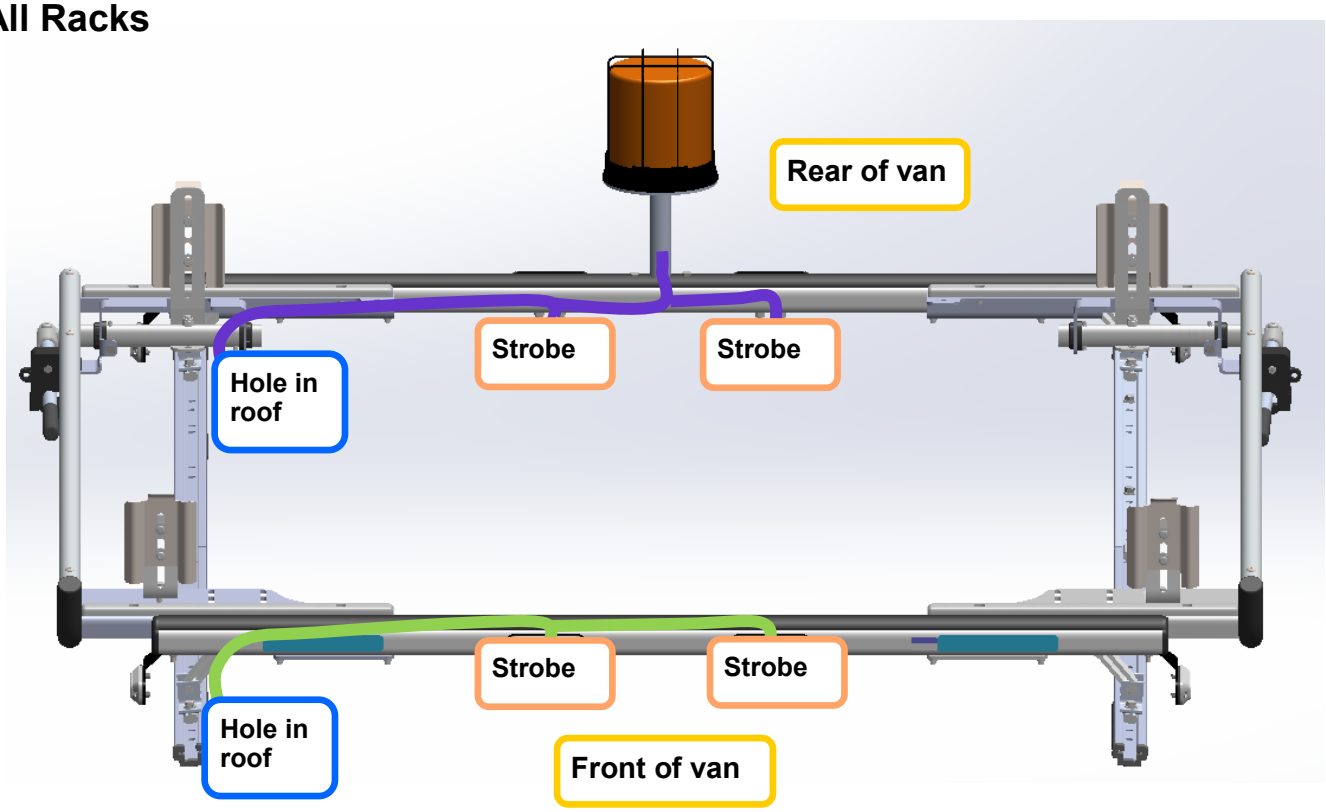

Utility Rack Routing

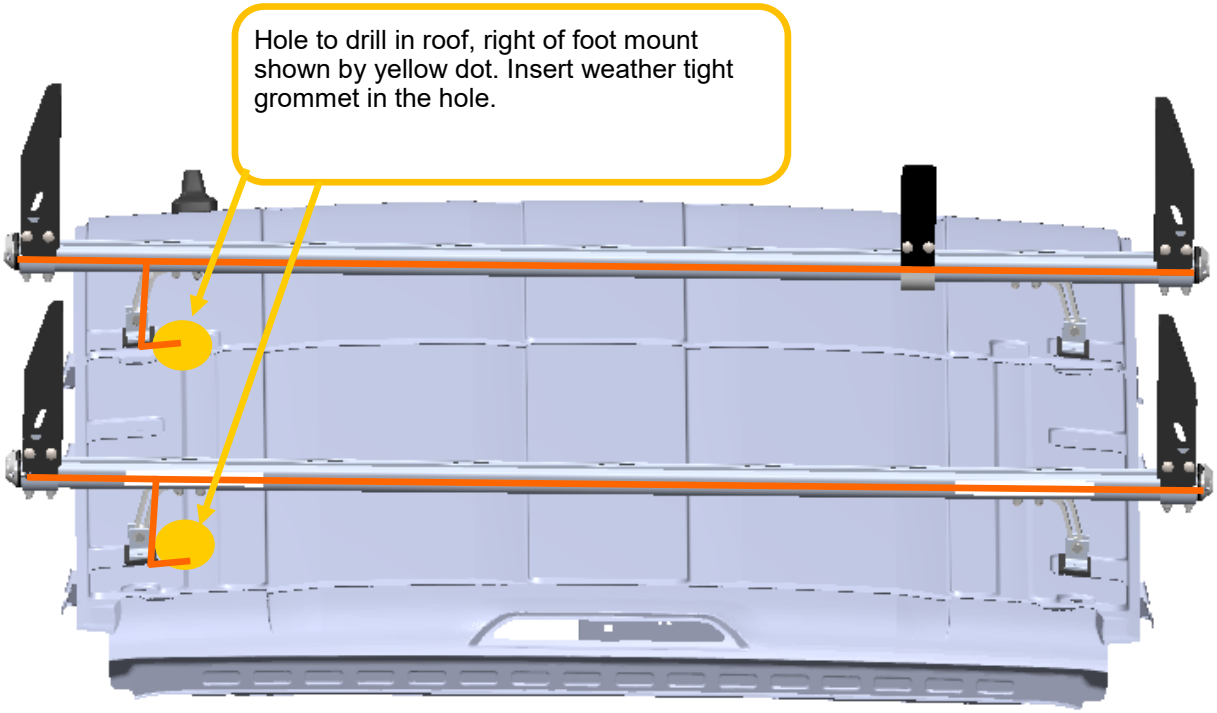

Drill hole in rail through the channels, to the right of the foot mount. (Shown Below) in orange.

Routing shown in orange. Route through the hole/grommet in roof, up the foot, then to both strobes. Route using the upper channel.

If need be, route the wires using the bottom channel. Then use the self tapping screws and nylon clips to secure the wiring.

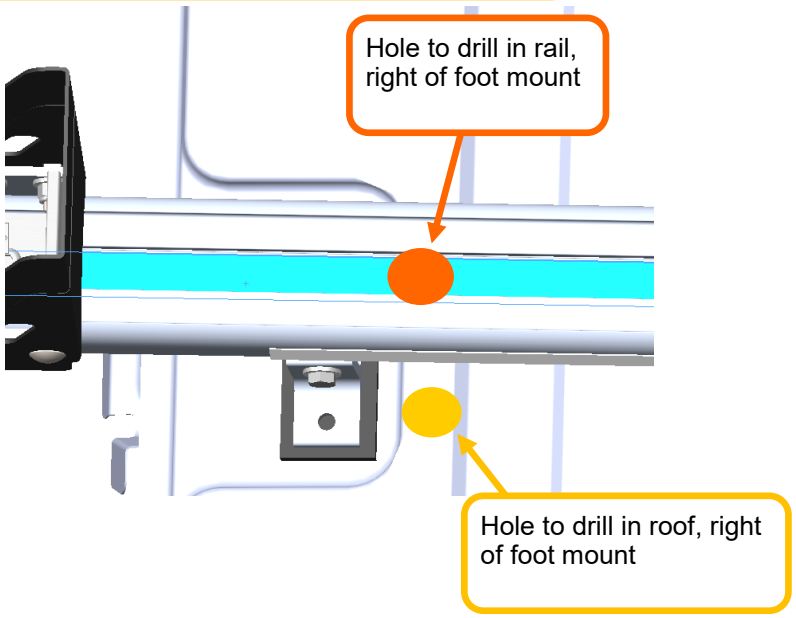

Beginning Install

Step 1: Locate the power harness #67094.

Remove the fuse from the inline fuse holder until he end of the install.

Driver's Foot Area:
Locate the OEM battery under the cover.

Remove the red positive battery cover.

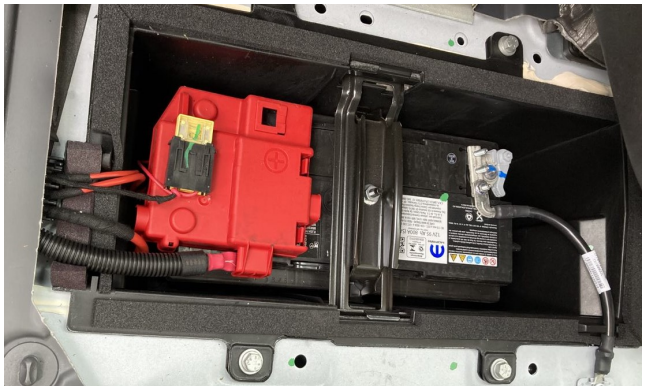

Attach the red wire with the ring terminal to the 12V positive post.

Attach the black wire with the ring terminal to the battery ground post.

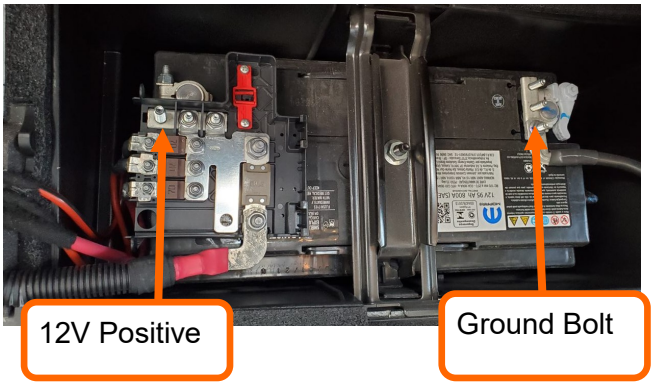

Route the white connector end towards the driver's foot well. Remove any needed trim to route wires. Keep the trim removed for beacon or strobe routing.

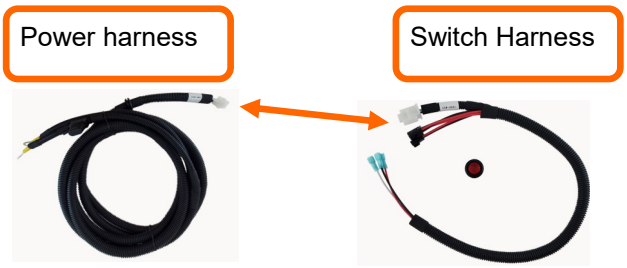

Step 2: Locate the switch harness #67100

Connect the switch harness connector to the power harness in the kick panel area.

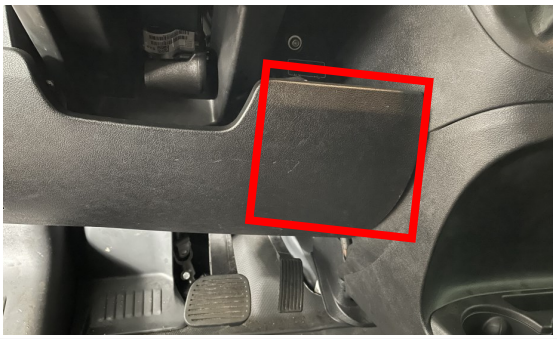

Step 3: IF NEED: Use a trim tool to carefully remove the knee bolster panel.

Locate the farthest right side of the knee bolster panel.
Measure and mark 1.5” down and centered in the square. Drill a hole in the center of the trim panel for the switch: A hole diameter of 3/4” (19mm) is necessary to install the snap in switch (do not insert switch yet).

If an inverter switch is already in this place, move the strobe switch to the left of the inverter switch, directly in line with it. Or however you can fit both switches in the same panel.

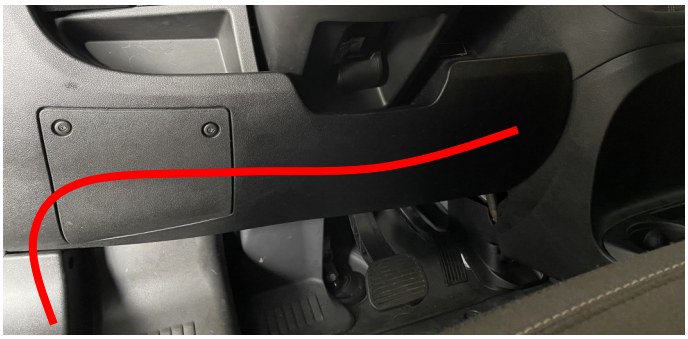

Using a fish tape: Route the switch end of the switch harness under the steering column behind the panels and through the opening in the switch location. AVOID MOVING/ROTATING OBJECTS.
Secure with zip ties.

Connect the ground spade to the gold pin on the rocker switch

Connect the white battery power spade to the opposite terminal on the switch.

Connect the red spade to the middle pin.

Insert the switch into the hole and place the strobe/beacon decal (if supplied) around the switch.
Reassemble all trim and secure wiring.

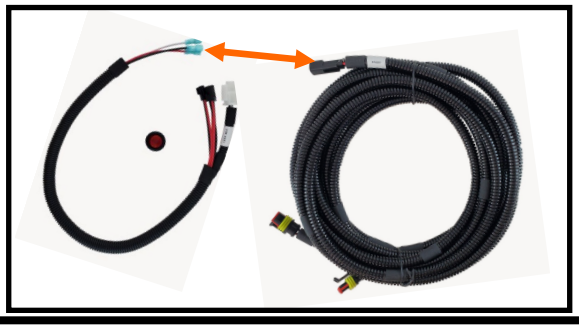

Step 4: Locate the body harness:
Promaster Low Roof: 67605
Promaster High Roof: 67603

Connect the harness to the switch harness (one of the remaining unused connectors) in the driver's foot well.

Step 5:
Locate the driver's side door sill area.

Carefully route the strobe harness through the door trim down to the floor.

Continue routing the harness down to the floor, under the sill trim, and under the driver's seat.

Re-insert trim that was pulled up after routing.

Continue routing the harness up the partition and secure with zip-ties.

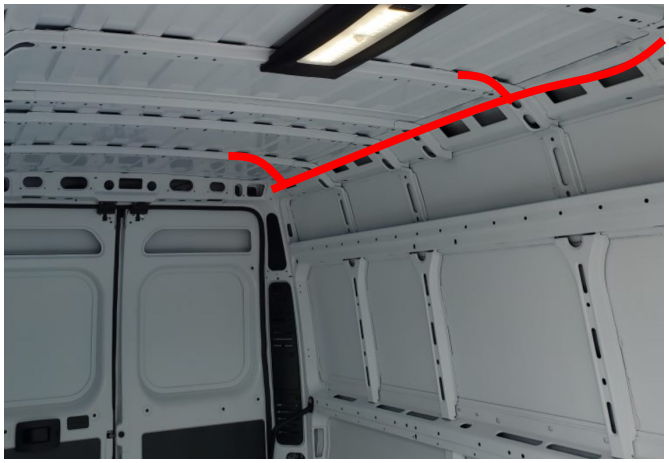

Continue routing the harness rearward inside the roof channel.

Loosely secure the wiring to the OEM harness (if applicable), as you may need to adjust the harness once the ladder Rack has been installed and holes have been drilled in the roof.

The first body harness connector to the ladder Rack harness should be loosely placed where the front cross bow will sit. Then the second connector should be placed loosely where the rear cross bow will sit.

Please note there will be slack in the harness, tie these up with zip ties.

Once the ladder Rack harnesses are connected to the body harness, you can completely secure the body harness.

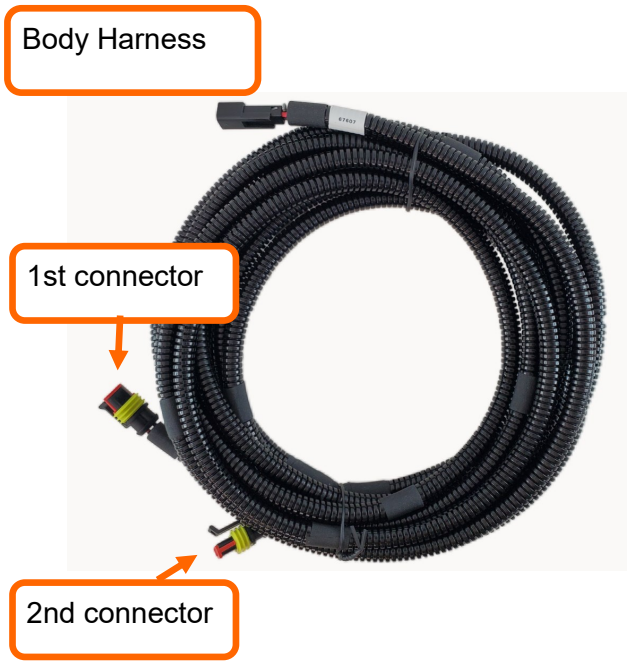

Please read carefully for next steps to the install:

You will not need to reference the entirety of the following instructions. You will only need to reference per the install you are completing.

Please note there are many configurations of the ladder racks. Refer to the order drawing for type of ladder rack per each side of the vehicle. (There can half grip lock / half prolift / half utility rack, full grip lock, full prolift, full utility rack, etc). Then assemble the corresponding bracketry per each ladder rack. Note there are different brackets for the strobes for the utility rack, grip lock, and prolift. For any uncertainties please refer to pages 4-15 for the needed harnesses and bracketry per the kit installing.

Please note the following strobe brackets per ladder rack:
Front/rear strobe brackets:67824-B
Utility rack corners: 66103-B
Grip lock corners: 67130-B
Prolift corners: 67136-B

Utility Rack Corner Strobe Install

Note: utility Rack wiring will be ran inside the cross bow channels of the ladder Rack for 4 corner strobes.

Step 1: Locate the strobe harnesses for both the front and rear cross bows.

List of applicable part numbers:
67614 - 58” cross bow corner strobe harness
67615 - 68”cross bow corner strobe harness
67618 - 58” cross bow corner strobe with beacon harness
67619 - 68” cross bow corner strobe with beacon harness

Notch to relief wires from strobe

Step 2: Preassemble wiring and lights to the utility Rack before mounting to the roof of the van.

The channel you will use to route the wire harness will depend on the utility Rack uprights being installed onto the Rack.

If the uprights use the upper channel for mounting, use the bottom channel for wire routing. And Vise Versa.

You may also need to go back and fourth between the upper and lower channel depending on the utility Rack accessories. Drill a 3/8” hole in the Rack to move the wire harness between the two channels

If using the bottom channel immediately after the strobe, notch the utility Rack middle, to relieve space for the strobe wires. See pictures to the left for reference.

Use the self taping screws and nylon clips to secure wiring if using the bottom channel.

Be sure NOT TO PINCH any wiring when tightening down utility Rack accessories with sides

You do NOT want to pinch wires like shown in this picture

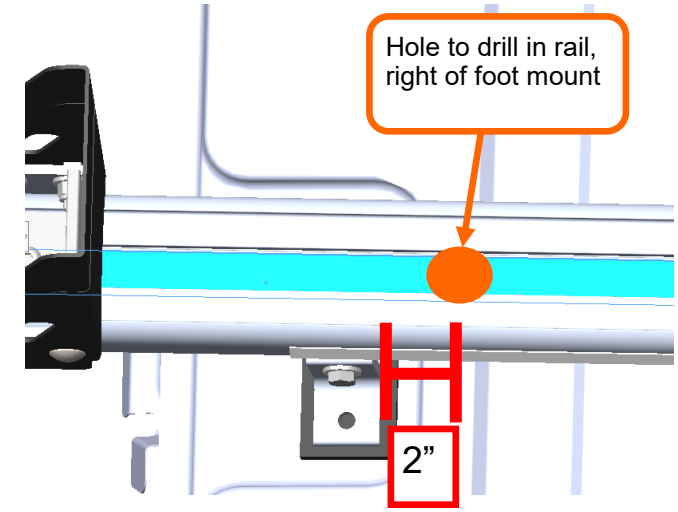

Step 3: Route the wires between the strobes (on both Racks)

Option 1: (The preferred option)
Drill a 3/8” hole from the top channel to the bottom channel, 2 inches to the right of the where the foot mounts to the rail.

Route the wires in the top rail channel (before inserting the weather strip).

Option 2: Route the wiring in the underside of the channel. You will need to drill a 3/8” hole from the top channel to the bottom channel directly under the beacon mount if there is a beacon installation for this build. This hole should directly in the middle of the crossbow. If the cross bow is 68”, the hole should be 34” from the end. If the cross bow is 58”, the hole should be 29” from the end.

Use the supplied tek screws (FAS0842) and nylon clips (66843) to secure the wiring under the utility Rack.

Where you route the wires will depend on what all options you are installing on the utility Rack.

If you are installing a few accessories onto the rail that mount to the bottom channel, use the top channel for wire routing. Or vise versa.

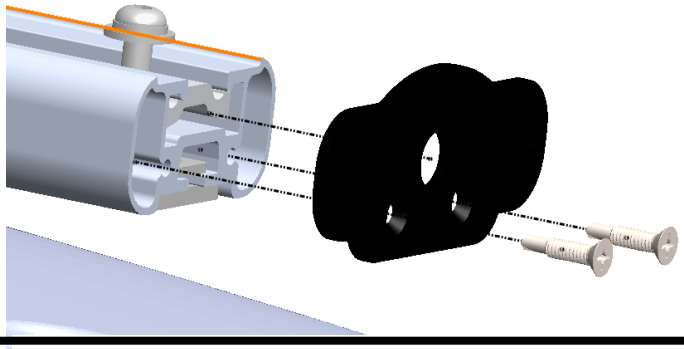

Step 4: Using BAG66095: Mount the strobe bRacket to the rail using the supplied self drilling screws (FAS0502). Use a No.3 philips head driver.

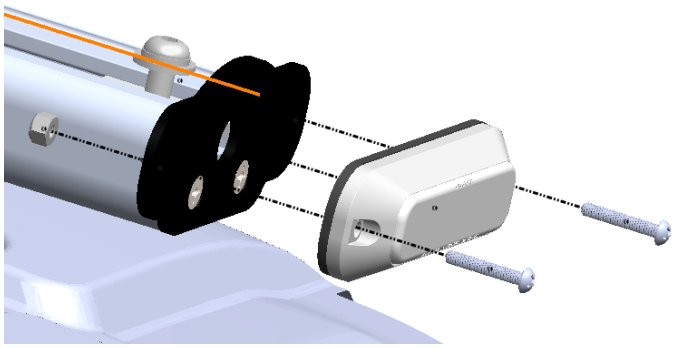

Step 5: Route the strobe wires through the center hole slot of the strobe bRacket.

Connect the strobe to the harness connector.

Mount the strobe light to the bRacket using the small Philips head screws (FAS0503) and nylon nuts (FAS0501).

Do steps 4 and 5 for all 4 utility Rack ends.

Beacon Install For Ship Thru—Non Drive-A-Way Vehicles. For ALL Racks—Stowed Beacon

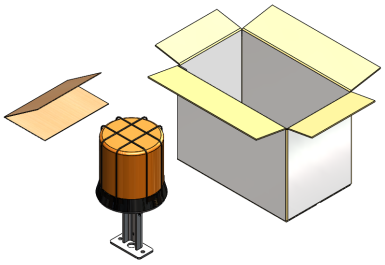

Step 1: Locate the beacon box assembly (this will be in a brown box) labeled 70970 Stow this into the vehicle (if not a drive-a-way vehicle). If this is a drive-a-way vehicle, please follow the dealer instructions inside the beacon assembly box (part number 70972) once these instructions are completed. Or skip to the next page.

Step 2: Locate the fastener bag BAG66092.
Grab the 2 identical spacers, part number 35335-0. Insert them (note orientation of the spacers) into the top channel of the rear cross bow rail. Slide them to middle of the cross bow rail.

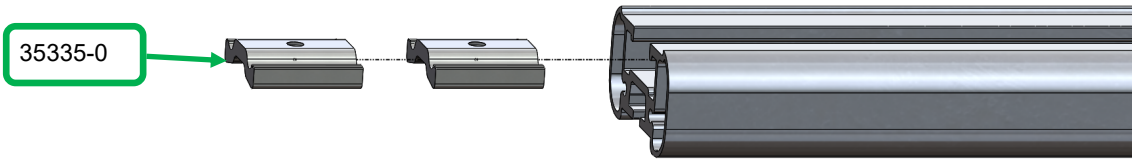

Step 3: Locate the flat spacer (64831), 5/16 bolts(FAS0799), lock washers (FAS0588), and flat washers (FAS0552). Once the spacers from the previous step are in the middle of the cross bow, insert the bolts through the lock washers, flat washers, then flat spacer, into the 35335-0 spacers. Tighten these down so they cannot slide.

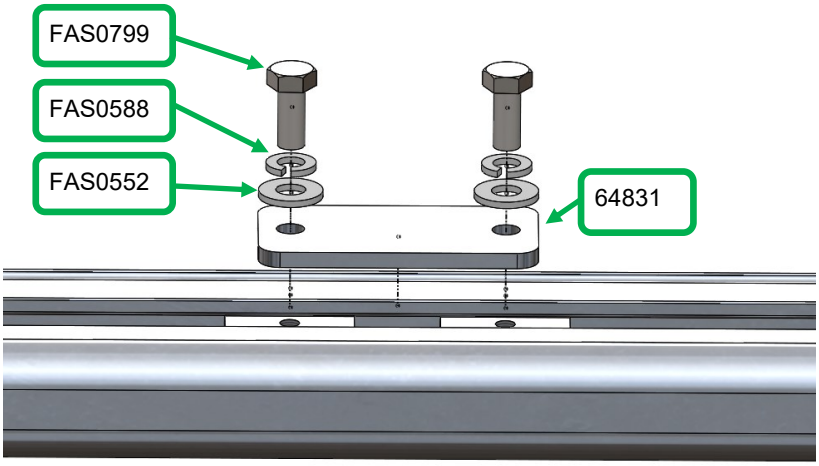

Place the beacon connector cap (found in the harness bag) over the weather proof connector (on the cross bow harness) to keep from water damage.

Beacon Install For Drive-A-Way Vehicles: Not Stowed

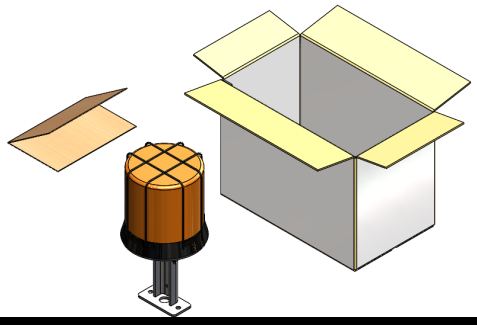

Step 1: Locate the beacon assembly box 70970. Open the box and remove the assembly and instructions.

Locate the fastener bag BAG66092 and grab the 5/16 bolts(FAS0799), lock washers (FAS0588),flat washers (FAS0552), and the rail spacers (35335-0) .

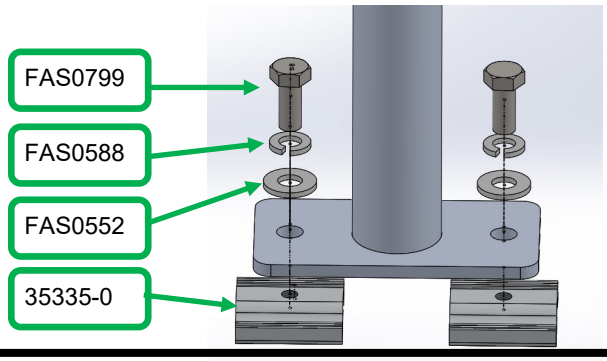

Step 2: Assemble the beacon mount feet by inserting the bolts (FAS0799) through the lock washers (FAS0588) then flat washers (FAS0552) then through the foot into the slides (35335-0). Do not tighten down at this point.

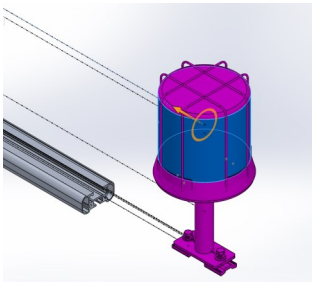

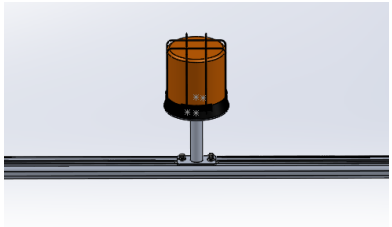

Step 3: Slide the beacon/mount to the center of the rail.

Note for Utility Racks: Be cautious of the wire sliding through the rail.

Tighten the bolts once you have positioned the beacon in the center.

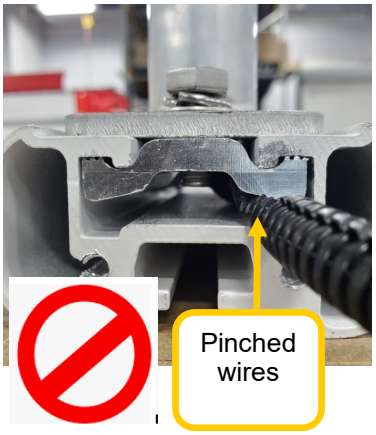

****Utility Rack risk and anytime you use the top channel for routing the beacon harness through.****

*****Be cautious the wires are not pinched after tightening the slides*****

Connect the beacon harness connector to the beacon. Please note routing to the beacon can be different between each Rack, as some will be routed using the top channel, some will use the bottom channel, and some will be routed on the outside of the channel up to the beacon. This will strictly depend on the install and what is best for the installer at this time.

Grip Lock And Prolift Rack— Corner Strobes

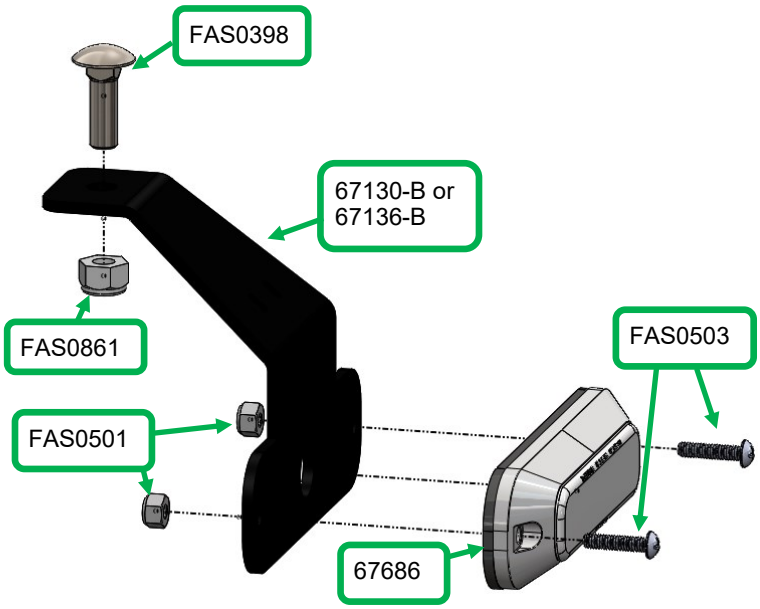

Step 1: Using BAG70965:
Assemble the strobe light to the grip lock bRacket (67130-B) or prolift bRacket (67136-B) using the small philips head screws and nylon nuts. (2 X FAS0501 and 2 X FAS0503). Note orientation of the bRacket and the strobe light.

Now insert the 5/16 carriage bolt (FAS0398) through the top of the bRacket hole. Thread the 5/16 nylon bolt (FAS0861) on the bolt but do not tighten yet.

Pull the strobe connector through the hole in the strobe bRacket. Secure the wiring with zip ties using the slots in the bRackets.

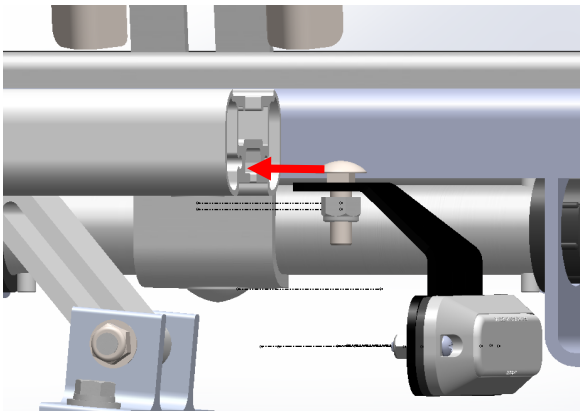

Step 2: Slide the nylon nut into the bottom channel of the cross bow. Once it is just far enough in the cross bow to clear the end cap, you can tighten the bolt to the nut to secure the bRacket. Then insert the end cap onto the cross bow.

Do this for all the corners of the ladder Rack that require a strobe.

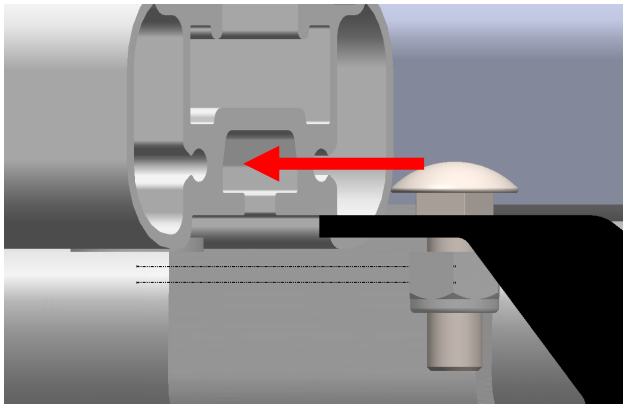

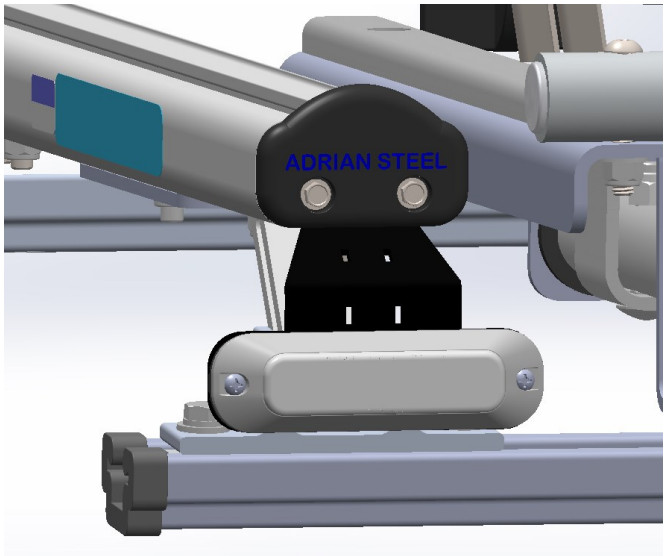

Step 3: Locate the strobe harnesses for both the front and rear cross bows.

List of applicable part numbers:
67614 - 58” cross bow corner strobe harness
67615 - 68”cross bow corner strobe harness
67618 - 58” cross bow corner strobe with beacon harness
67619 - 68” cross bow corner strobe with beacon harness

Identify the wire end with the terminals WITHOUT the connector. This end will route through the cable gland / hole in the roof and connect to the body harness inside the van.

Step 4: Keep the terminal end without the connector on the drivers side of the ladder Rack. Locate the strobe connector end that is closest to the non-connector end, and connect it to the strobe on the drivers side of the vehicle. Run the wiring across the cross bow and connect the opposing end to the passenger side strobe. Do this for the front and rear cross bows / strobes.

Step 5: Use the small self tapping screws (FAS0842) and the nylon clamps (66843) to secure the wiring. The ideal routing path is on the insides of the ladder Rack cross bows. If this is not applicable, route the wiring under the cross bows. **Do not secure wiring to any moving objects.**

All Ladder Racks—Front And Rear Strobes

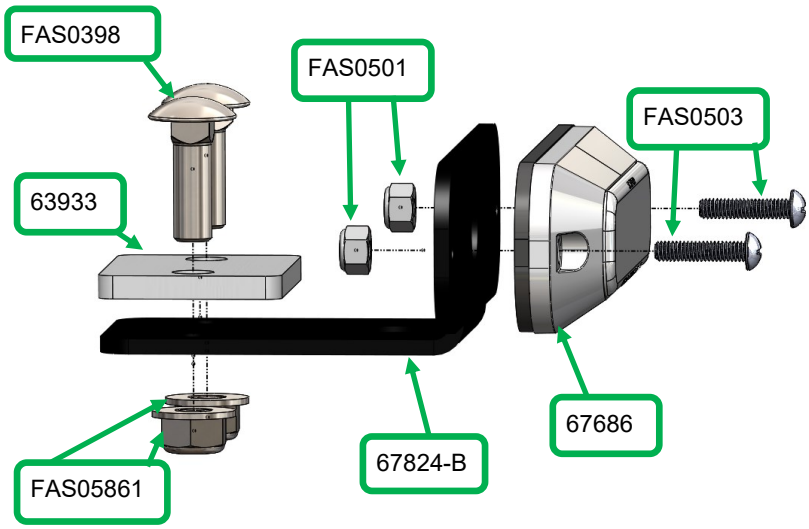

Step 1: Using BAG70965:
Assemble the strobe light to the bRacket (67824-B) using the small philips head screws and nylon nuts. (2 X FAS0501 and 2 X FAS0503).

Now insert the 2 5/16 carriage bolts (FAS0398) through the spacer (63933) holes then through bRacket holes. Thread the 2 5/16 nylon bolts (FAS0861) onto the carriage bolts but do not tighten yet.
Note orientation of the bRacket, bolts, nuts, and the spacer.

Step 2: Pull the strobe connector through the hole in the strobe bRacket. Secure the wiring with zip ties using the slots in the bRackets.

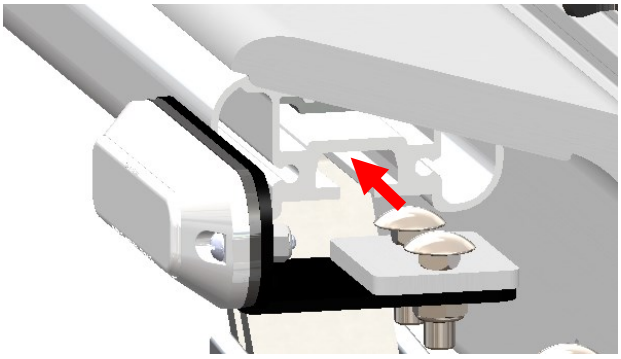

Step 3: Slide the carriage bolt heads into the bottom channel of the ladder Rack cross bar until the desired locations of the strobes. These strobes can be placed in various spots across the cross bow. Ideal locations is to have them symmetrical from the center. Be sure to have enough wiring to get to each connector on the harness.

Note the strobe locations will change based off each Rack due to the ladder Rack components on the cross bow.

Picture below is an example of the grip lock.

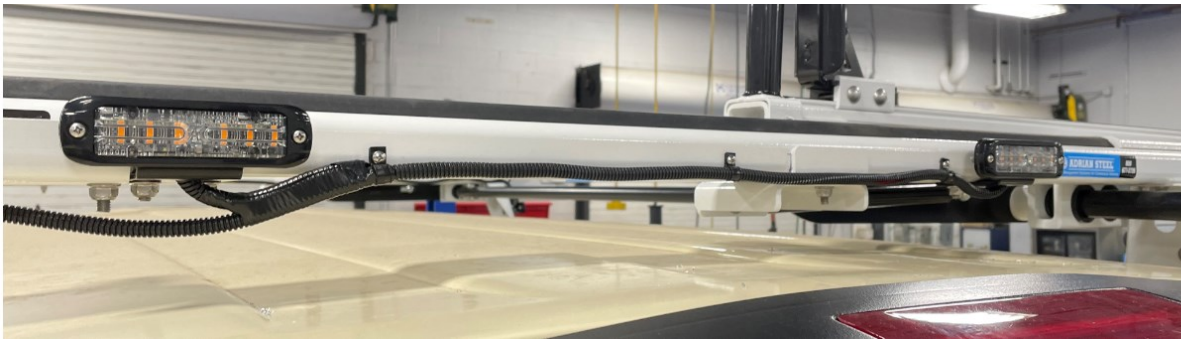

Step 4: Locate the strobe harnesses for both the front and rear cross bows.

List of applicable part numbers:
67616 - Front and rear strobes harness
67620 - Front and rear strobes with beacon harness

Identify the wire end with the terminals WITH-OUT the connector. This end will route through the cable gland / hole in the roof and connect to the body harness inside the van.

Step 5: Keep the terminal end without the connector on the drivers side of the ladder Rack. Locate the strobe connector end that is closest to the non connector end, and connect it to the strobe on the drivers side of the vehicle. Run the wiring across the cross bow and connect the opposing end to the passenger side strobe. Do this for the front and rear cross bows / strobes.

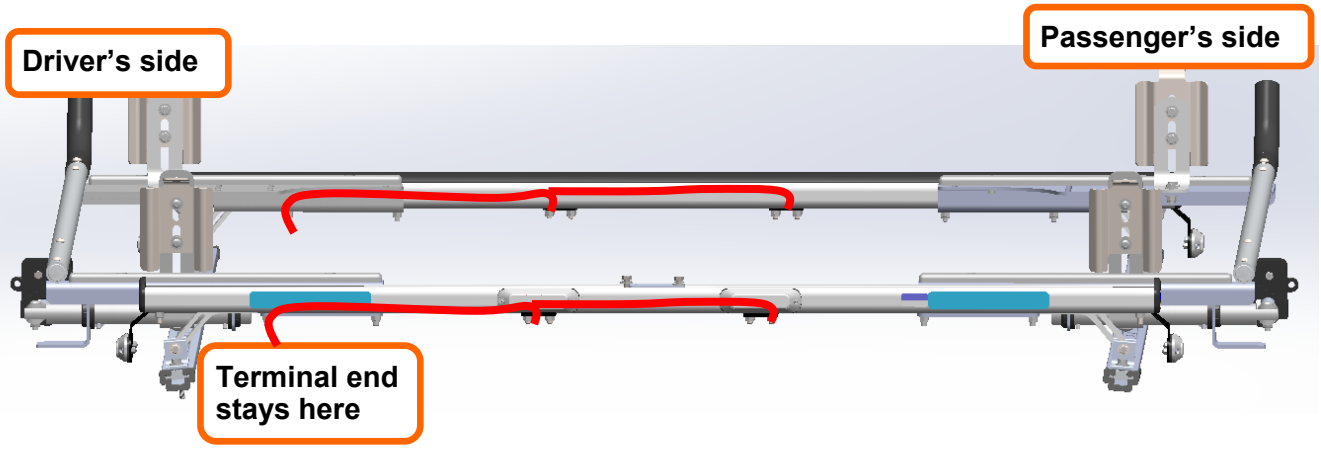

Step 6: Use the small self tapping screws (FAS0842) and the nylon clamps (66843) to secure the wiring. The ideal routing path is on the insides of the ladder Rack cross bows. If this is not applica-ble, route the wiring under the cross bows. **Do not secure wiring to any moving objects.** **Use the harness to help determine the locations of the strobes. Once fully determined, tighten down the strobe bRackets.

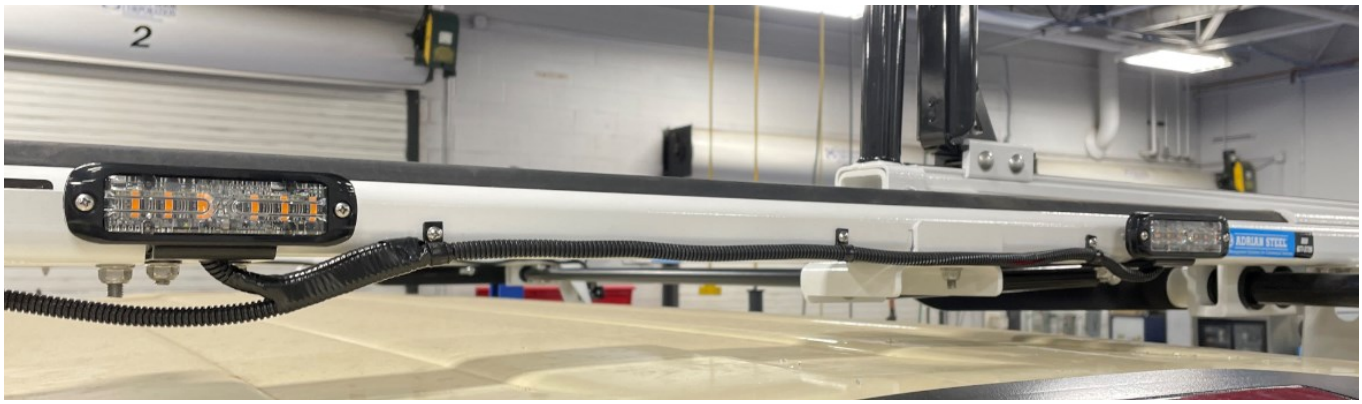

All Ladder Racks—Mounting And Roof Drilling

Use the ladder Rack instructions to finish the ladder Rack install. Mount the Rack to the roof—or at least know exactly where it is going to mount. Determine the hole location that is needed for the wire pass through cable gland. This should be as close as possible to the Rack foot on the drivers side, to the right of the foot. See the diagram below for approximate location. Each vehicle will be different, so be sure to check the inside of the van before drilling the hole.

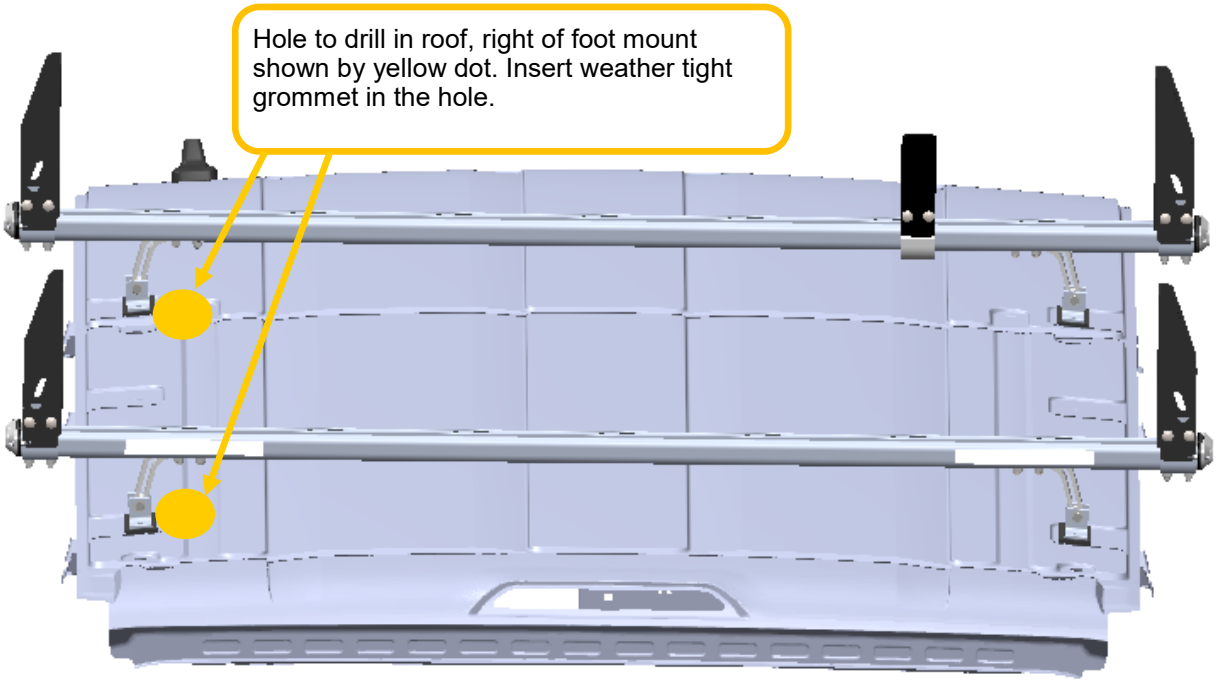

Drill a 7/8” hole in the roof. Insert the cable gland into the hole. Route the wire terminal end of the harness through the hole and silicone. Do this for both the front and rear cross bows. Picture below is an example of the Chevy Express roof.

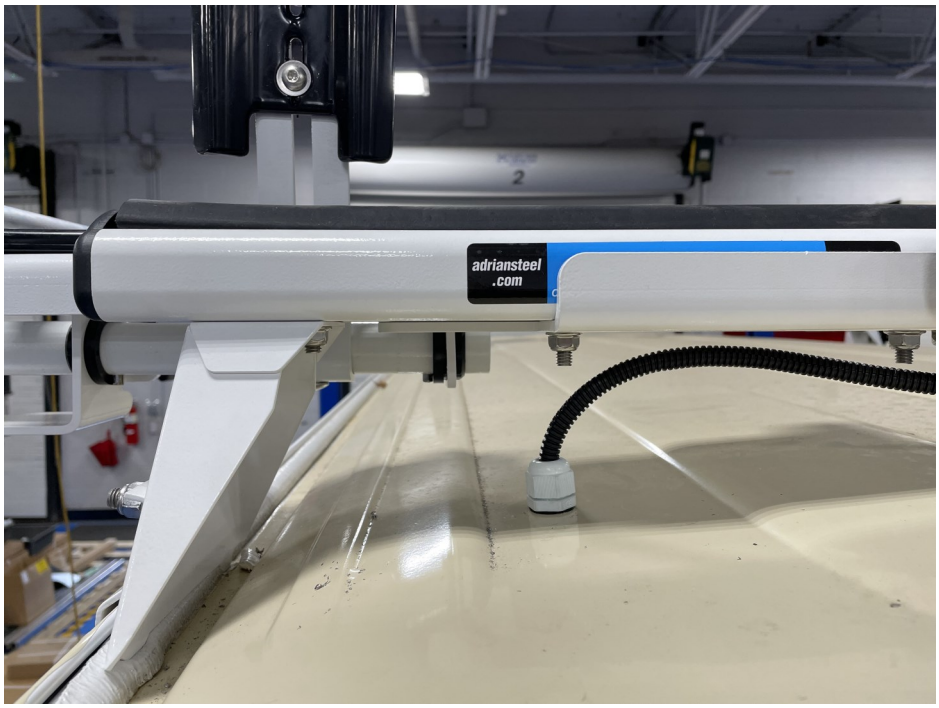

Terminal ends of the harness WITHOUT the connector

Locate the connector housing inside the light-bar/beacon box.

Note if it has a red insert inside the connector or not. Refer to picture for red insert inside the connector.

Insert the lightbar wire terminals into the connector. **See steps below:**

In these steps be very careful to place the terminals into the correct side of the connector.

Line the red wire terminal up with cavity #1 and the black wire terminal up with cavity #2.

Note the connector has a “1” and a “2” noted on the connector (circled in red). The red wire will be inserted into the #1 cavity of the connector. The black wire will be inserted into the #2 cavity on the connector.

Be sure to align the terminal prongs up with the inside of the connector pin outs.

Carefully insert the terminals into their designated section.

Also be sure the terminals snap into position. You should feel or hear a click when they are correctly inserted.

Pull on the wiring to be sure the connectors have been inserted completely.

If not already done:
Insert the red plastic piece into the top end of the connector. This will also click into place.

Do this for both the cross bow harnesses.

Now connect this connector/harness to the body harness that has been routed through the van already. Finish securing the harness to the vehicle.

Insert the fuse into the inline-fuse holder on the power harness. The install is now complete. Secure all wiring with zip ties. Re-attach all trim. Re-assure all pass through holes have been silicone. Double check the functionality of the lights and switches.

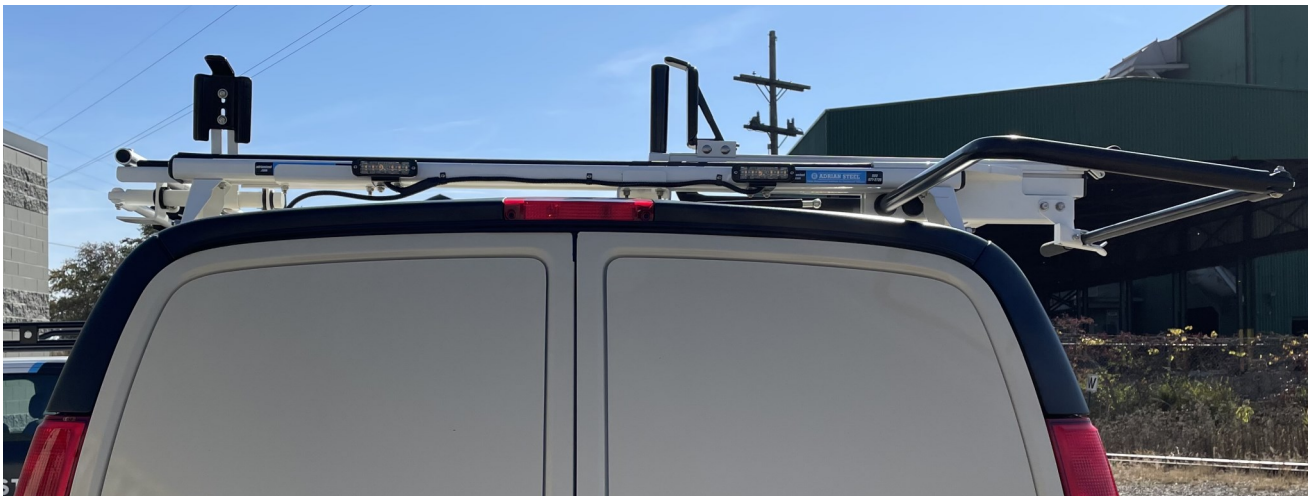

PART NUMBER
13905-0

ITEM DESCRIPTION: WIRE TIE, NYLON 40Lb, 8.5” BLACK

MANUFACTURER: WAYTEK, INC. or equivalent
MANUFACTURERS PART NUMBER: 21093M or 21093C

SPECIFICATIONS: STANDARD CABLE TIE
BLACK, NYLON
8-1/2” LONG
TENSILE STRENGTH: 40.0 LBS
21093M = 1,000 quanity
21093C = 100 quanity

SPECIAL NOTES: PART NUMBER IS BLACK.

SUPPLIED BY: THIS ITEM IS ADRIAN AVAILABLE!

PURCHASED PRODUCT DATA SHEET (PPDS)

THIS DRAWING/INFORMATION IS THE PROPERTY OF ADRIAN STEEL COMPANY AND IS NOT TO BE USED IN ANY MANNER THAT IS DETRIMENTAL TO THE INTEREST OF ADRIAN STEEL. COPYRIGHTS AND OR PATENTS THAT MAY BE THE PROPERTY OF APPLICABLE OWNERS MAY PROTECT INFORMATION AND/OR DRAWINGS OF SUPPLIED PRODUCTS.

ADRIAN STEEL®
VAN AND PICKUP EQUIPMENT

906 JAMES STREET
ADRIAN, MI 49221
517-265-6194
WWW.ADRIANSTEEL.COM

⚠ CAUTION ⚠

WHEN INSTALLING EQUIPMENT IN OR ON VEHICLES CHECK FOR FUEL TANKS, FUEL LINES, CONTROL LINES AND ELECTRICAL WIRING BEFORE DRILLING! ALWAYS USE DRILL BITS WITH INTEGRAL STOPS WHENEVER POSSIBLE!

DRAWN BY: MDG	DATE DRAWN: 10/26/2006
ECN NUMBER: 18021	ECN DATE: 11/13/2015
PART WEIGHT: 0.01 LBS.	REV. LEVEL: D
PART NUMBER: 13905-0	

PART NUMBER
26618-0

ITEM DESCRIPTION: SILICONE, 1oz. TUBE

SPECIFICATIONS: SU5005 RTV SILICONE
1oz. TUBE
CLEAR OR EQUIVILENT
SELF PIERCING CAP

SPECIAL NOTES:

SUPPLIED BY: THIS ITEM IS ADRIAN AVAILABLE!

PURCHASED PRODUCT DATA SHEET (PPDS)

THIS DRAWING/INFORMATION IS THE PROPERTY OF ADRIAN STEEL COMPANY AND IS NOT TO BE USED IN ANY MANNER THAT IS DETRIMENTAL TO THE INTEREST OF ADRIAN STEEL. COPYRIGHTS AND OR PATENTS THAT MAY BE THE PROPERTY OF APPLICABLE OWNERS MAY PROTECT INFORMATION AND/OR DRAWINGS OF SUPPLIED PRODUCTS.

ADRIAN STEEL®
VAN AND PICKUP EQUIPMENT

906 JAMES STREET
ADRIAN, MI 49221
517-265-6194
WWW.ADRIANSTEEL.COM

⚠ CAUTION ⚠

WHEN INSTALLING EQUIPMENT IN OR ON VEHICLES CHECK FOR FUEL TANKS, FUEL LINES, CONTROL LINES AND ELECTRICAL WIRING BEFORE DRILLING! ALWAYS USE DRILL BITS WITH INTEGRAL STOPS WHENEVER POSSIBLE!

DRAWN BY: JLC	DATE DRAWN: 7/21/2001
ECN NUMBER: 16551	ECN DATE: 7/22/2014
PART WEIGHT: 0.02 LBS.	REV. LEVEL: C
PART NUMBER: 26618-0	

PART NUMBER
26618-0

ITEM DESCRIPTION: SILICONE, 1oz. TUBE

SPECIFICATIONS: SU5005 RTV SILICONE
1oz. TUBE
CLEAR OR EQUIVILENT
SELF PIERCING CAP

SPECIAL NOTES:

SUPPLIED BY: THIS ITEM IS ADRIAN AVAILABLE!

PURCHASED PRODUCT DATA SHEET (PPDS)

THIS DRAWING/INFORMATION IS THE PROPERTY OF ADRIAN STEEL COMPANY AND IS NOT TO BE USED IN ANY MANNER THAT IS DETRIMENTAL TO THE INTEREST OF ADRIAN STEEL. COPYRIGHTS AND OR PATENTS THAT MAY BE THE PROPERTY OF APPLICABLE OWNERS MAY PROTECT INFORMATION AND/OR DRAWINGS OF SUPPLIED PRODUCTS.

ADRIAN STEEL®
VAN AND PICKUP EQUIPMENT

906 JAMES STREET
ADRIAN, MI 49221
517-265-6194
WWW.ADRIANSTEEL.COM

⚠ CAUTION ⚠

WHEN INSTALLING EQUIPMENT IN OR ON VEHICLES CHECK FOR FUEL TANKS, FUEL LINES, CONTROL LINES AND ELECTRICAL WIRING BEFORE DRILLING! ALWAYS USE DRILL BITS WITH INTEGRAL STOPS WHENEVER POSSIBLE!

DRAWN BY: JLC	DATE DRAWN: 7/21/2001
ECN NUMBER: 16551	ECN DATE: 7/22/2014
PART WEIGHT: 0.02 LBS.	REV. LEVEL: C
PART NUMBER: 26618-0	

PART NUMBER
55073

ITEM DESCRIPTION: STROBE SWITCH DECAL SET

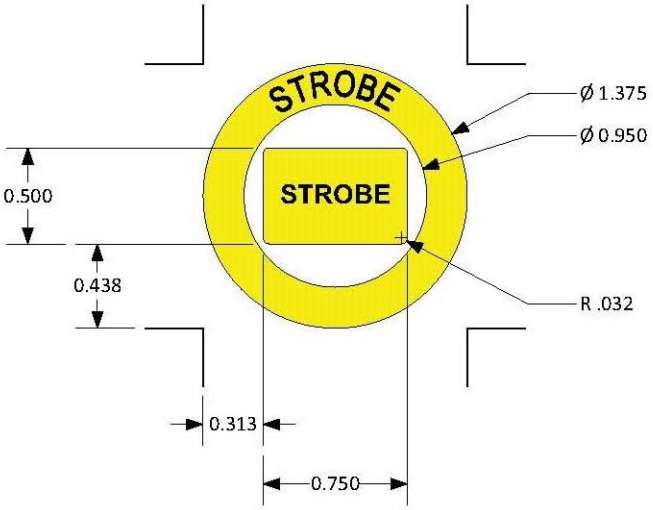

MANUFACTURER: VANNER
MANUFACTURERS PART NUMBER: TBD

SPECIFICATIONS: (1) Circular Yellow Decal (ID=0.950", OD=1.375") with "STROBE" in black letters
(1) Rectangular Yellow Decal (H=0.500", L=0.750") with "STROBE" in black letters

SPECIAL NOTES: For round rocker switch (OD=0.780") and Ford Transit Upfitter Switches.

SUPPLIED BY: THIS ITEM IS ADRIAN AVAILABLE!

PURCHASED PRODUCT DATA SHEET (PPDS)

THIS DRAWING/INFORMATION IS THE PROPERTY OF ADRIAN STEEL COMPANY AND IS NOT TO BE USED IN ANY MANNER THAT IS DETRIMENTAL TO THE INTEREST OF ADRIAN STEEL. COPYRIGHTS AND OR PATENTS THAT MAY BE THE PROPERTY OF APPLICABLE OWNERS MAY PROTECT INFORMATION AND/OR DRAWINGS OF SUPPLIED PRODUCTS.

ADRIAN STEEL
Cargo Management Solutions for Commercial Vehicles
906 JAMES STREET
ADRIAN, MI 49221
517-265-6194
WWW.ADRIANSTEEL.COM

⚠ CAUTION ⚠

WHEN INSTALLING EQUIPMENT IN OR ON VEHICLES CHECK FOR FUEL TANKS, FUEL LINES, CONTROL LINES AND ELECTRICAL WIRING BEFORE DRILLING! ALWAYS USE DRILL BITS WITH INTEGRAL STOPS WHENEVER POSSIBLE!

DRAWN BY: RJB	DATE DRAWN: 11/15/2017
ECN NUMBER: XXXX	ECN DATE: XXXXXX
PART WEIGHT: 0.02 LBS.	REV. LEVEL: A
PART NUMBER: 55073	

PART NUMBER
55073

THIS DRAWING/INFORMATION IS THE PROPERTY OF ADRIAN STEEL COMPANY AND IS NOT TO BE USED IN ANY MANNER THAT IS DETRIMENTAL TO THE INTEREST OF ADRIAN STEEL. COPYRIGHTS AND OR PATENTS THAT MAY BE THE PROPERTY OF APPLICABLE OWNERS MAY PROTECT INFORMATION AND/OR DRAWINGS OF SUPPLIED PRODUCTS.

ADRIAN STEEL
Cargo Management Solutions for Commercial Vehicles

906 JAMES STREET
ADRIAN, MI 49221
517-265-6194
WWW.ADRIANSTEEL.COM

⚠ CAUTION ⚠

WHEN INSTALLING EQUIPMENT IN OR ON VEHICLES CHECK FOR FUEL TANKS, FUEL LINES, CONTROL LINES AND ELECTRICAL WIRING BEFORE DRILLING! ALWAYS USE DRILL BITS WITH INTEGRAL STOPS WHENEVER POSSIBLE!

DRAWN BY: RJB	DATE DRAWN: 11/15/2017
ECN NUMBER: XXXX	ECN DATE: XXXXXXX
PART WEIGHT: 0.02 LBS.	REV. LEVEL: A
PART NUMBER: 55073	

FINAL APPLICATION LAYOUT

IMPORTANT NOTE TO INSTALL CREWS:

LOC I QTY I Part # I Description I Size

Material: IJ39 I Lamination: 8518

1 1: 6039597.Strobe Switch-1.52" x 2.07"

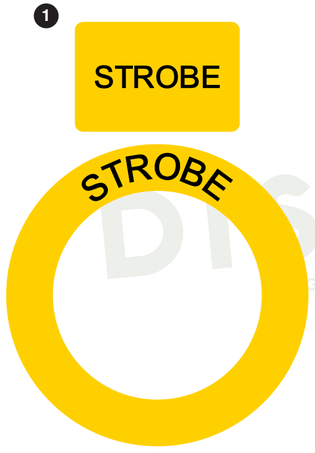

Note: Part will not be weeded, just cut.

Kit# 8001872 | Adrian Steel Part # 55073

06/01/2023 • JY

© 2022 DISTYLL Graphics Solutions. All rights reserved.

ASCO REV.1 6/14/2023

DISTYLL GRAPHIC SOLUTIONS FINAL DESIGN	CLIENT NAME: Adrian Steel		Switch Decals		O-ID: O15319-1
					Rev #: XXXX
	DATE: 05/31/2023	DESIGNER: TRN			Opt #: A

Please check information to confirm accurate vehicle specifications.

CLEANING INSTRUCTIONS All surfaces must be considered contaminated. Clean the vehicle surface immediately before applying the film. Dust and other contaminates can collect quickly on the surface and prevent the film from adhering properly. Even a freshly painted surface can collect dust before graphics can be applied.

For the best success with the films recommended for vehicle graphics, always apply the graphics when the air and vehicle surface are both above 60°F (16°C) and below 90°F (32°C) before beginning the installation.

PURCHASED COMPONENT KEY FEATURES

DESCRIPTION OF REQUIREMENTS
DIMENSIONAL REQUIREMENTS (AS SHOWN ON DRAWING) **N/A**
LOAD/RATING REQUIREMENT **N/A**
MATERIAL REQUIREMENT **N/A**
PACKAGING REQUIREMENT **N/A**
OTHER REQUIREMENTS

Coverings	
Id	Assembly
[7]	
[8]	

Notes	
1	Lock Tape Loom with Tesa 51036
2	Add 15A Mini Fuse
3	Add rubber grommet over harness loom; 150mm behind C2

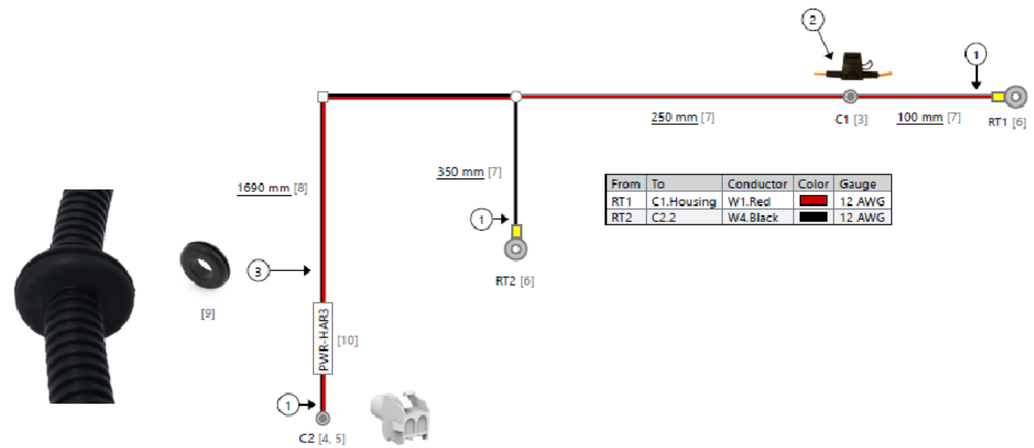

From	To	Conductor	Color	Gauge
RT1	C1.Housing	W1.Red		12 AWG
RT2	C2.2	W4.Black		12 AWG

From	To	Color	Gauge
C2.1	C1.Housing		12 AWG
C2.2	RT2		12 AWG

Revisions			
Rev.	Date	Author	Description
A	11/5/2021	Bennet Fisher	Initial Drawing

UNLESS OTHERWISE SPECIFIED
DIMENSIONS ARE IN MILLIMETERS [INCHES]
TOLERANCES: ±5MM

PROPRIETARY AND CONFIDENTIAL

THE INFORMATION CONTAINED IN THIS DRAWING IS THE SOLE PROPERTY OF AAMP GLOBAL. ANY REPRODUCTION IN PART OR AS A WHOLE WITHOUT THE WRITTEN PERMISSION OF AAMP GLOBAL IS PROHIBITED.

	Name	Date
Designed By	Bennet Fisher	11/5/2021
Engineering Approval	----	----
Manufacturing Approval	----	----
Revision Approval	----	----
Quality Assurance	----	----

AAMP — ADVANCING VEHICLE TECHNOLOGY —

Part Number: PWR-HAR3 | Revision: ----
Description: Exterior Light Battery Harness | Sheet: 1 of 1

THIS DRAWING IS THE PROPERTY OF ADRIAN STEEL COMPANY AND IS NOT TO BE USED IN ANY MANNER DETRIMENTAL TO THE INTERESTS OF ADRIAN STEEL COMPANY

PRINTED DOCUMENT IS UNCONTROLLED

TOLERANCES & INSPECTION

UNLESS OTHERWISE SPECIFIED

ALL BEND ANGLES ARE 90 DEGREES

ALL DIMENSIONS ARE IN INCHES.

REFERENCE DIMENSIONS (X.XXX) DO NOT REQUIRE INSPECTION

FEATURES	HOLES/SLOTS	ANGLES
0.0 = ± .125	0.0 = ± .062	0° = ± 2°
0.00 = ± .062	0.00 = ± .031	0.0° = ± 1°
0.000 = ± .031	0.000 = ± .015	

Material Thickness: per ASTM Std.
Weld Callouts per AWS

RELEASE & REVISIONS

INITIAL ECN: **25378**

CURRENT ECN: **25378**

ECN DESCRIPTION:

RELEASE FOR PRODUCTION

REVISED BY:

PURCHASED COMPONENT

REFERENCED SUPPLIER AND/OR MANUFACTURER
AAMP GLOBAL

REFERENCED SUPPLIER AND/OR MANUFACTURER PART NUMBER
67094 OR PWR-HAR3

COLOR (ONLY LIST IF COLOR SPECIFIC)

COMODITY ITEM (Y/N) (YES = ALL DIMENSIONS AND NOTES ARE REFERANCE)
(NOTE: DIMENSIONS AND FEATURES MAY VARY FOR A COMODITY ITEM.)
NO

PART / PRODUCT IDENTIFICATION

ADRIAN STEEL®

ADRIAN STEEL COMPANY
906 JAMES STREET, ADRIAN, MI 49221

REVISION LEVEL **A**

MAT'L USED: **PURCHASED**

DESIGNED BY: **E.BURKE**

DESCRIPTION: **POWER HARNESS EXTERIOR 3**

WEIGHT (Lbs.): **0.2**

SEGMENT CODE: **ELE**

PART NUMBER: **67094**

Coverings	
Id	Assembly
[7]	
[8]	

Notes	
1	Lock Tape Loom with Tesa 51036
2	Add 15A Mini Fuse
3	Add rubber grommet over harness loom; 150mm behind C2

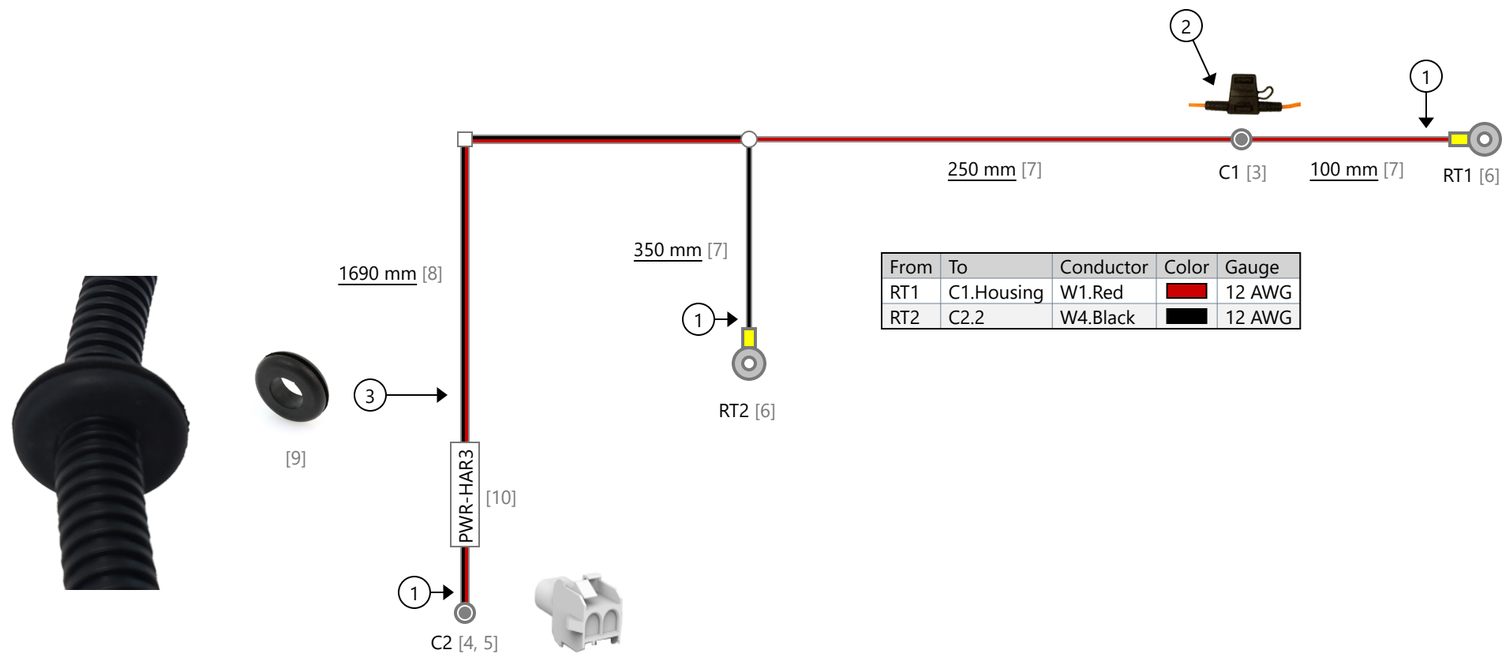

From	To	Conductor	Color	Gauge
RT1	C1.Housing	W1.Red		12 AWG
RT2	C2.2	W4.Black		12 AWG

From	To	Color	Gauge
C2.1	C1.Housing		12 AWG
C2.2	RT2		12 AWG

Revisions			
Rev.	Date	Author	Description
A	11/5/2021	Bennet Fisher	Initial Drawing

UNLESS OTHERWISE SPECIFIED

DIMENSIONS ARE IN MILLIMETERS [INCHES]
TOLERANCES: ±5MM

PROPRIETARY AND CONFIDENTIAL

THE INFORMATION CONTAINED IN THIS DRAWING IS THE SOLE PROPERTY OF AAMP GLOBAL. ANY REPRODUCTION IN PART OR AS A WHOLE WITHOUT THE WRITTEN PERMISSION OF AAMP GLOBAL IS PROHIBITED.

	Name	Date
Designed By	Bennet Fisher	11/5/2021
Engineering Approval	----	----
Manufacturing Approval	----	----
Revision Approval	----	----
Quality Assurance	----	----

AAMP
ADVANCING VEHICLE TECHNOLOGY

Part Number: PWR-HAR3

Revision: ----

Description:
Exterior Light Battery Harness

Sheet: 1 of 1

PURCHASED COMPONENT KEY FEATURES

DESCRIPTION OF REQUIREMENTS
DIMENSIONAL REQUIREMENTS (AS SHOWN ON DRAWING) **N/A**
LOAD/RATING REQUIREMENT **N/A**
MATERIAL REQUIREMENT **N/A**
PACKAGING REQUIREMENT **N/A**
OTHER REQUIREMENTS

THIS DRAWING IS THE PROPERTY OF ADRIAN STEEL COMPANY AND IS NOT TO BE USED IN ANY MANNER DETRIMENTAL TO THE INTERESTS OF ADRIAN STEEL COMPANY

PRINTED DOCUMENT IS UNCONTROLLED

TOLERANCES & INSPECTION

UNLESS OTHERWISE SPECIFIED

ALL BEND ANGLES ARE 90 DEGREES

ALL DIMENSIONS ARE IN INCHES.

REFERENCE DIMENSIONS (X.XXX) DO NOT REQUIRE INSPECTION

FEATURES	HOLES/SLOTS	ANGLES
0.0 = ± .125	0.0 = ± .062	0° = ± 2°
0.00 = ± .062	0.00 = ± .031	0.0° = ± 1°
0.000 = ± .031	0.000 = ± .015	

Material Thickness: per ASTM Std.
Weld Callouts per AWS

RELEASE & REVISIONS

INITIAL ECN: **25378**

CURRENT ECN: **25378**

ECN DESCRIPTION:

RELEASE FOR PRODUCTION

REVISED BY:

PURCHASED COMPONENT

REFERENCED SUPPLIER AND/OR MANUFACTURER
AAMP GLOBAL

REFERENCED SUPPLIER AND/OR MANUFACTURER PART NUMBER
SSW-HAR4 OR 67100

COLOR (ONLY LIST IF COLOR SPECIFIC)

COMODITY ITEM (Y/N) (YES = ALL DIMENSIONS AND NOTES ARE REFERANCE)
(NOTE: DIMENSIONS AND FEATURES MAY VARY FOR A COMODITY ITEM.)
NO

PART / PRODUCT IDENTIFICATION

ADRIAN STEEL®

ADRIAN STEEL COMPANY
906 JAMES STREET, ADRIAN, MI 49221

REVISION LEVEL **A**

MAT'L USED: **PURCHASED**

DESIGNED BY: **E.BURKE**

DESCRIPTION: **SWITCH HARNESS 4 EXTERIOR LIGHTING**

WEIGHT (Lbs.): **0.2**

SEGMENT CODE: **ELE**

PART NUMBER: **67100**

Coverings	
Id	Assembly
[12]	

Notes	
1	Lock Tape Loom with Tesa 51608
2	75mm between end of loom and Quick Connects

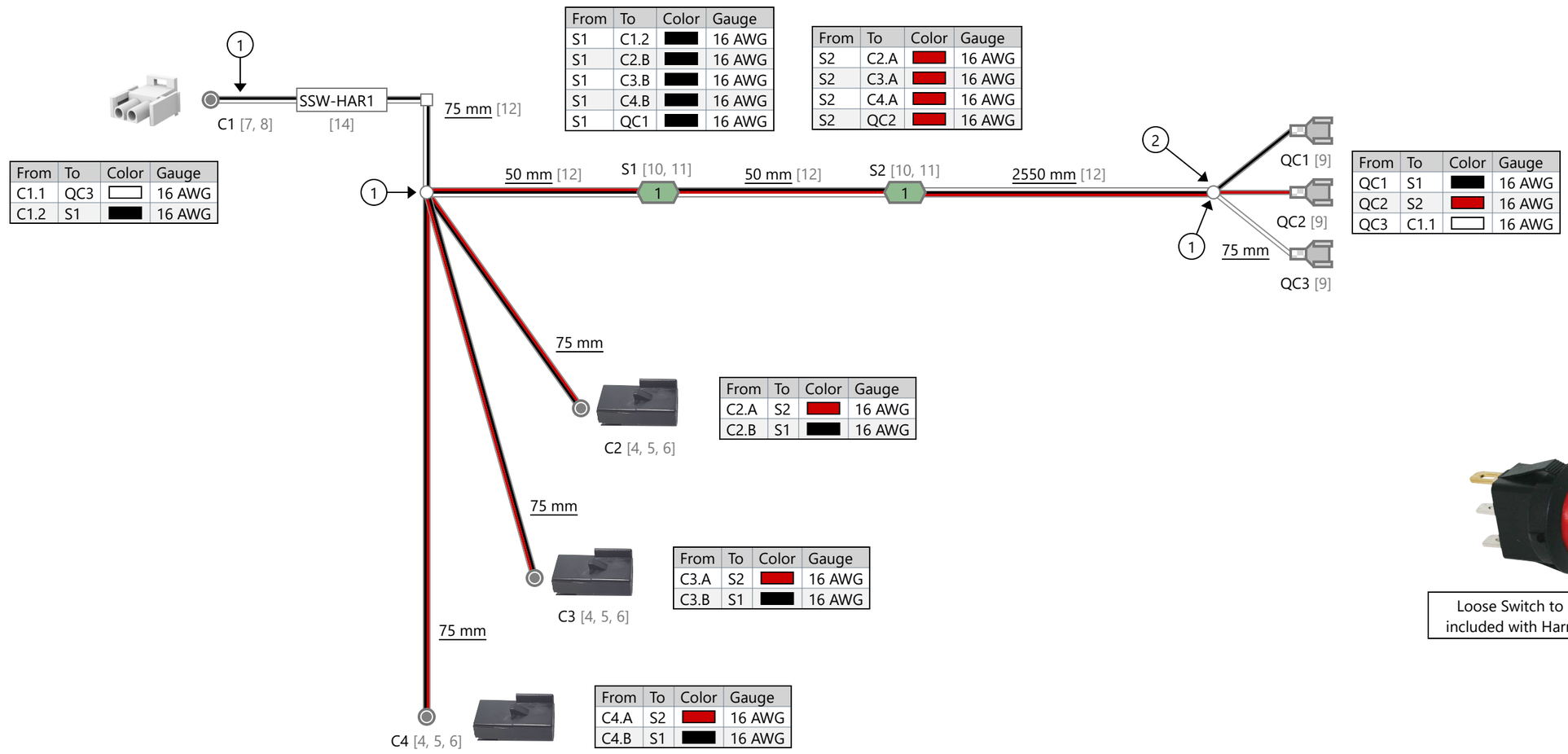

From	To	Color	Gauge
C1.1	QC3		16 AWG
C1.2	S1		16 AWG

From	To	Color	Gauge
S1	C1.2		16 AWG
S1	C2.B		16 AWG
S1	C3.B		16 AWG
S1	C4.B		16 AWG
S1	QC1		16 AWG

From	To	Color	Gauge
S2	C2.A		16 AWG
S2	C3.A		16 AWG
S2	C4.A		16 AWG
S2	QC2		16 AWG

From	To	Color	Gauge
QC1	S1		16 AWG
QC2	S2		16 AWG
QC3	C1.1		16 AWG

From	To	Color	Gauge
C2.A	S2		16 AWG
C2.B	S1		16 AWG

From	To	Color	Gauge
C3.A	S2		16 AWG
C3.B	S1		16 AWG

From	To	Color	Gauge
C4.A	S2		16 AWG
C4.B	S1		16 AWG

Loose Switch to be included with Harness

Revisions			
Rev.	Date	Author	Description
A	11/5/2021	Bennet Fisher	Initial Drawing

UNLESS OTHERWISE SPECIFIED

DIMENSIONS ARE IN MILLIMETERS [INCHES]
TOLERANCES: ±5MM

PROPRIETARY AND CONFIDENTIAL

THE INFORMATION CONTAINED IN THIS DRAWING IS THE SOLE PROPERTY OF AAMP GLOBAL. ANY REPRODUCTION IN PART OR AS A WHOLE WITHOUT THE WRITTEN PERMISSION OF AAMP GLOBAL IS PROHIBITED.

	Name	Date
Designed By	Bennet Fisher	11/5/2021
Engineering Approval	----	----
Manufacturing Approval	----	----
Revision Approval	----	----
Quality Assurance	----	----

AAMP
ADVANCING VEHICLE TECHNOLOGY

Part Number: SSW-HAR4

Revision: ----

Description:
Strobe Switch Harness - 3 Outputs

Sheet: 1 of 1

PURCHASED COMPONENT KEY FEATURES

DESCRIPTION OF REQUIREMENTS

DIMENSIONAL REQUIREMENTS (AS SHOWN ON DRAWING)

N/A

LOAD/RATING REQUIREMENT

N/A

MATERIAL REQUIREMENT

N/A

PACKAGING REQUIREMENT

N/A

OTHER REQUIREMENTS

PLUG AND PLAY BODY HARNESS 1 FOR LADDER RACK LIGHTING

INCLUDES:
20 CABLE TIES
5 WIRE TIE WITH CHRISTMAS TREES
7 STICKEY BACKED CABLE TIE HOLDERS

#1

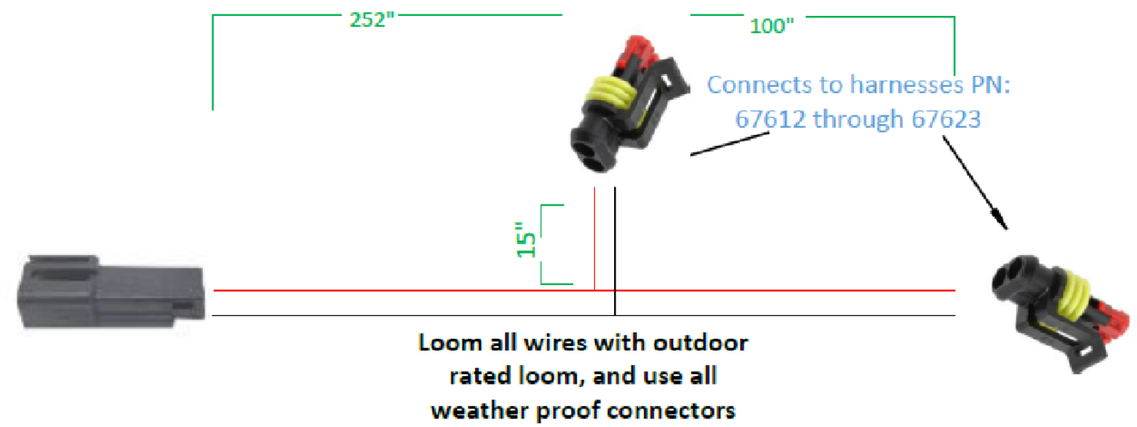

THIS DRAWING IS THE PROPERTY OF ADRIAN STEEL COMPANY AND IS NOT TO BE USED IN ANY MANNER DETRIMENTAL TO THE INTERESTS OF ADRIAN STEEL COMPANY

PRINTED DOCUMENT IS UNCONTROLLED

TOLERANCES & INSPECTION

UNLESS OTHERWISE SPECIFIED

ALL BEND ANGLES ARE 90 DEGREES

ALL DIMENSIONS ARE IN INCHES.

REFERENCE DIMENSIONS (X.XXX) DO NOT REQUIRE INSPECTION

FEATURES	HOLES/SLOTS	ANGLES
0.0 = ± .125	0.0 = ± .062	0° = ± 2°
0.00 = ± .062	0.00 = ± .031	0.0° = ± 1°
0.000 = ± .031	0.000 = ± .015	

Material Thickness: per ASTM Std.
Weld Callouts per AWS

RELEASE & REVISIONS

INITIAL ECN: 26041

CURRENT ECN: 26041

ECN DESCRIPTION:

RELEASE TO PRODUCTION

REVISED BY: **EMB**

PURCHASED COMPONENT

REFERENCED SUPPLIER AND/OR MANUFACTURER
AAMP

REFERENCED SUPPLIER AND/OR MANUFACTURER PART NUMBER
67603

COLOR (ONLY LIST IF COLOR SPECIFIC)

COMODITY ITEM (Y/N) (YES = ALL DIMENSIONS AND NOTES ARE REFERANCE)
(NOTE: DIMENSIONS AND FEATURES MAY VARY FOR A COMODITY ITEM.)
NO

PART / PRODUCT IDENTIFICATION

ADRIAN STEEL®

ADRIAN STEEL COMPANY
906 JAMES STREET, ADRIAN, MI 49221

REVISION LEVEL **A**

MAT'L USED: **PURCHASED**

DESIGNED BY: **E.BURKE**

DESCRIPTION: **BODY HARN 1 EXT P&P**

WEIGHT (Lbs.): **0.1**

SEGMENT CODE: **ELE**

PART NUMBER: **67603**

PURCHASED COMPONENT KEY FEATURES

DESCRIPTION OF REQUIREMENTS

DIMENSIONAL REQUIREMENTS (AS SHOWN ON DRAWING)

N/A

LOAD/RATING REQUIREMENT

N/A

MATERIAL REQUIREMENT

N/A

PACKAGING REQUIREMENT

N/A

OTHER REQUIREMENTS

PLUG AND PLAY HARNESS FOR LADDER RACKS
2 STROBES IN THE MIDDLE OF 58" AND 68" RACK

INCLUDES:
10 CABLE TIES
1 CABLE GLAND
1 UN-CONNECTED TE282080-1 IN BAG

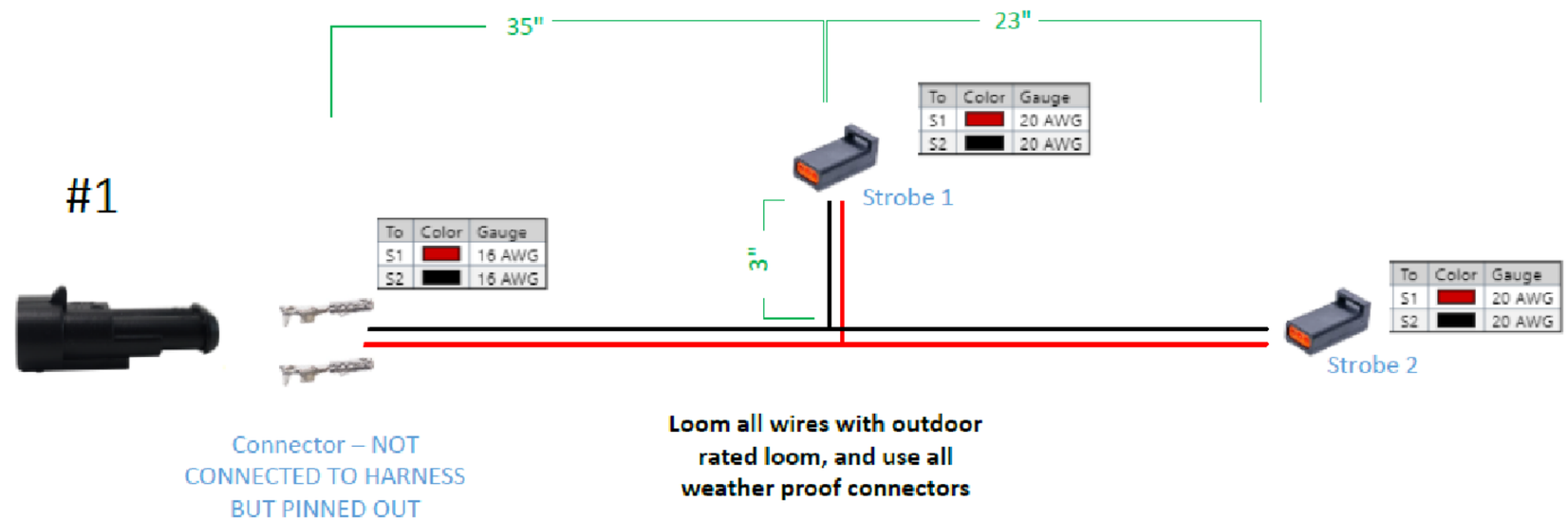

THIS DRAWING IS THE PROPERTY OF ADRIAN STEEL COMPANY AND IS NOT TO BE USED IN ANY MANNER DETRIMENTAL TO THE INTERESTS OF ADRIAN STEEL COMPANY

PRINTED DOCUMENT IS UNCONTROLLED

TOLERANCES & INSPECTION

UNLESS OTHERWISE SPECIFIED

ALL BEND ANGLES ARE 90 DEGREES

ALL DIMENSIONS ARE IN INCHES.

REFERENCE DIMENSIONS (X.XXX) DO NOT REQUIRE INSPECTION

FEATURES	HOLES/SLOTS	ANGLES
0.0 = ± .125	0.0 = ± .062	0° = ± 2°
0.00 = ± .062	0.00 = ± .031	0.0° = ± 1°
0.000 = ± .031	0.000 = ± .015	

Material Thickness: per ASTM Std.
Weld Callouts per AWS

RELEASE & REVISIONS

INITIAL ECN: **26041**

CURRENT ECN: **26041**

ECN DESCRIPTION:

RELEASE TO PRODUCTION

REVISED BY: **EMB**

PURCHASED COMPONENT

REFERENCED SUPPLIER AND/OR MANUFACTURER
AAMP

REFERENCED SUPPLIER AND/OR MANUFACTURER PART NUMBER
67616

COLOR (ONLY LIST IF COLOR SPECIFIC)

COMODITY ITEM (Y/N) (YES = ALL DIMENSIONS AND NOTES ARE REFERANCE)
(NOTE: DIMENSIONS AND FEATURES MAY VARY FOR A COMODITY ITEM.)
NO

PART / PRODUCT IDENTIFICATION

ADRIAN STEEL®

ADRIAN STEEL COMPANY
906 JAMES STREET, ADRIAN, MI 49221

REVISION LEVEL **A**

MAT'L USED: **PURCHASED**

DESIGNED BY: **E.BURKE**

DESCRIPTION: **STROBE HARN RR/FWD 58/68"**

WEIGHT (Lbs.): **0.1**

SEGMENT CODE: **ELE**

PART NUMBER: **67616**

PURCHASED COMPONENT KEY FEATURES

DESCRIPTION OF REQUIREMENTS

DIMENSIONAL REQUIREMENTS (AS SHOWN ON DRAWING)

N/A

LOAD/RATING REQUIREMENT

N/A

MATERIAL REQUIREMENT

N/A

PACKAGING REQUIREMENT

N/A

OTHER REQUIREMENTS

ECCO STROBE LIGHT: ED3801
WITH EXTERIOR PLUG AND PLAY CONNECTOR

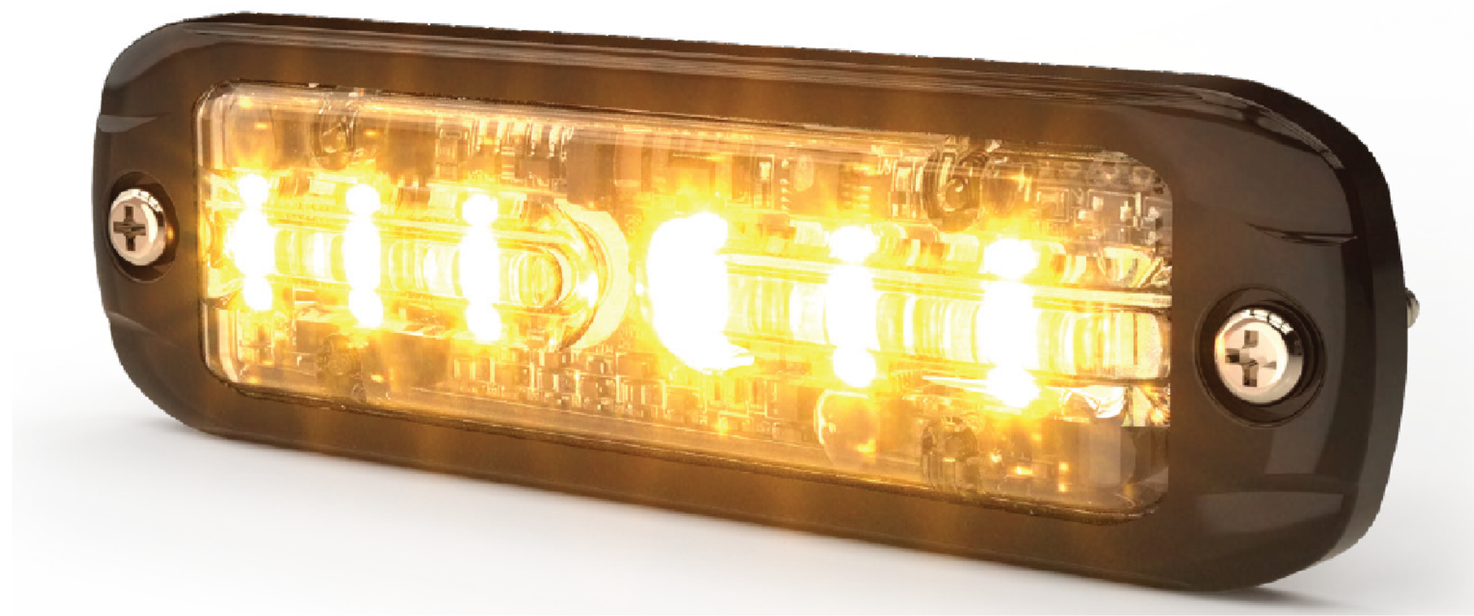

THIS DRAWING IS THE PROPERTY OF ADRIAN STEEL COMPANY AND IS NOT TO BE USED IN ANY MANNER DETRIMENTAL TO THE INTERESTS OF ADRIAN STEEL COMPANY

PRINTED DOCUMENT IS UNCONTROLLED

TOLERANCES & INSPECTION

UNLESS OTHERWISE SPECIFIED

ALL BEND ANGLES ARE 90 DEGREES

ALL DIMENSIONS ARE IN INCHES.

REFERENCE DIMENSIONS (X.XXX) DO NOT REQUIRE INSPECTION

FEATURES	HOLES/SLOTS	ANGLES
0.0 = ± .125	0.0 = ± .062	0° = ± 2°
0.00 = ± .062	0.00 = ± .031	0.0° = ± 1°
0.000 = ± .031	0.000 = ± .015	

Material Thickness: per ASTM Std.
Weld Callouts per AWS

RELEASE & REVISIONS

INITIAL ECN: 25921

CURRENT ECN: 25921

ECN DESCRIPTION:

RELEASE TO PRODUCTION

REVISED BY: **N/A**

PURCHASED COMPONENT

REFERENCED SUPPLIER AND/OR MANUFACTURER
ECCO

REFERENCED SUPPLIER AND/OR MANUFACTURER PART NUMBER
ED3801A-ADR

COLOR (ONLY LIST IF COLOR SPECIFIC)
AMBER LED/CLEAR LENS

COMODITY ITEM (Y/N) (YES = ALL DIMENSIONS AND NOTES ARE REFERANCE)
(NOTE: DIMENSIONS AND FEATURES MAY VARY FOR A COMODITY ITEM.)
NO

PART / PRODUCT IDENTIFICATION

ADRIAN STEEL®

ADRIAN STEEL COMPANY
906 JAMES STREET, ADRIAN, MI 49221

REVISION LEVEL **A**

MAT'L USED: **PURCHASED**

DESIGNED BY: **EMB**

DESCRIPTION: **ECCO STROBE ED3801A W/CON**

WEIGHT (Lbs.): **0.5**

SEGMENT CODE: **EST**

PART NUMBER: **67686**