Introduction / Comments:

Install Instructions Ladder Rack Lighting for Transit Vans

Note:

Read all instructions prior to installation. Review the Adrian Steel **GENERAL PRECAUTIONS PAGES (56638**) before attempting installation. Only personnel familiar with using electrical best practices should perform this install. Reference **ELECTRICAL BEST PRACTICES MANUAL (54479)** before attempting installation.

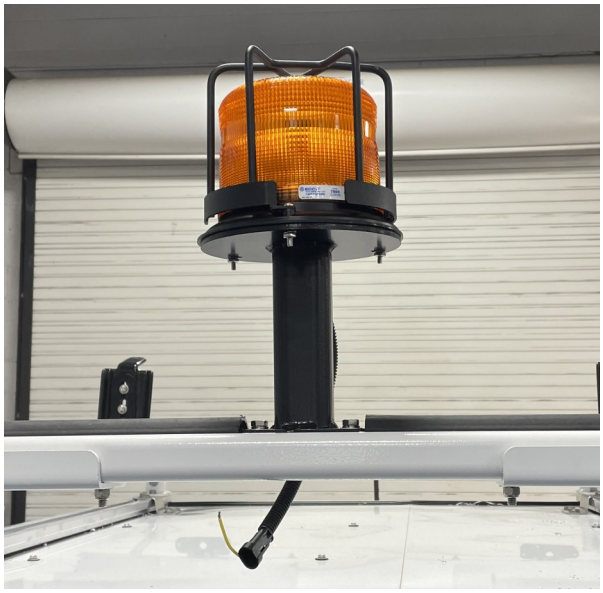





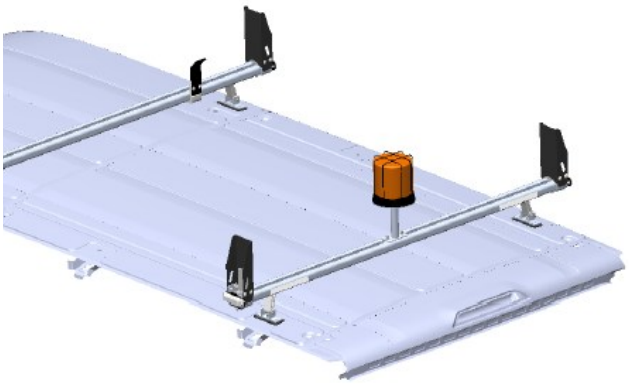

Installation Instructions Ladder Rack Lighting For Transit Vans

Table of Contents:

Torque Requirements……..……...2

Best Practice for Routing Through the Firewall……..3

Introduction Statement……..……4

Overall Harness Diagram……..4

Tools Needed……...4

Harnesses/Components Needed ……...……..…5

Fastener Bags Needed……..…15

Cross Bow/Strobe Harness Diagram Example……..…16

Component Placements……...17

Overall Harness Routing……..18

Beginning Install……....21

Utility Rack Corner Strobes Install……..……..25

Stowed Beacon Install—All Racks……..……...27

Drive-A-Way Vehicle Beacon Install—All Racks……..28

Grip And Prolift Corner Strobes Install……..……29

Front And Rear Strobes Install—All Racks……31

After Ladder Rack Mounting—Drilling In Roof……..33

Finishing Install……..……...35

*****TORQUE*****
Torque all strobe fasteners to 10 in-lbs.
DO NOT OVER TIGHTEN
DO NOT MOUNT ON A CURVED SURFACE

Best Practices to Follow when Routing Through Firewall:

- Create a drip loop with the harness being routed through the firewall as shown so that the water does not flow into the grommet.
- Make sure that the proper grommet for the hole being routed through is used so that there are no openings for water to get through.
- Use silicone after routing and apply around the grommet and wire to seal it. Make sure to let the silicone dry for 30 minutes to an hour.

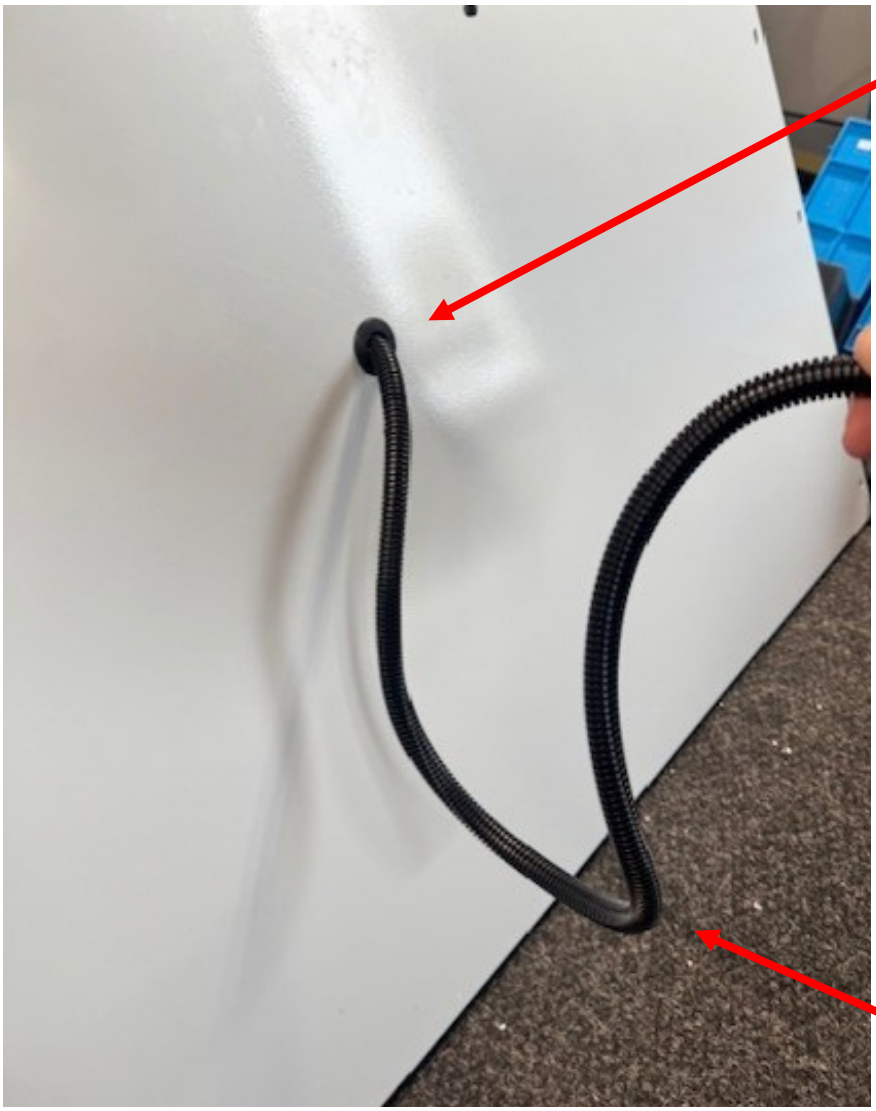

****Please read statement below before moving forward****

Before installation, disconnect the OEM's negative battery cable.

These plug and play kits are completely modular and can be configured in many different ways. Placement of lights will be determined by sales order drawings/customer ask. Therefore, these instructions are for the most standard configurations, and for reference only.

Please reference the order drawing and spec sheet to see what components are going to be installed on this particular upfit.

These installation instructions are for most cases and for reference. Not all installs will have strobes, beacons, and lightbars. Reference the instructions for only what you are installing.

Overall Harness Diagram

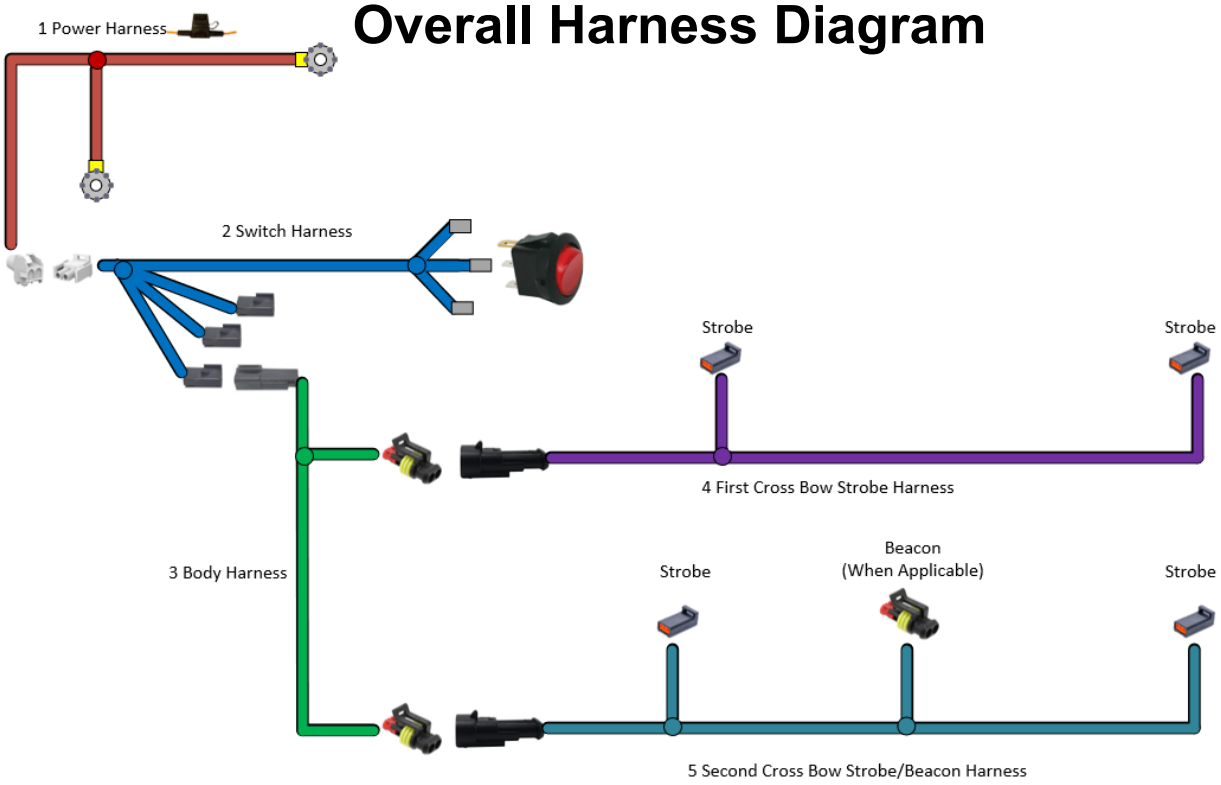

Tools required:



13mm and 10mm socket and wrenches



Phillips #1 and #3 bit,

1/2" drill bit and 5/16" step drill bit



Power drill and impact

Torque wrench

Trim tools

Parts Reference—Only If Needed. Kit Numbers: Kit Type: Product Structures

Transit Low Roof Ladder Rack Lighting Harnesses

70965: 4 Corner Strobes On Utility Rack

Num	Q	Part Number	Description
1	1	67092	Power Harness Exterior #1
2	1	67098	Switch Harness Exterior #2
3	1	67607	Body Harness Exterior #3
4/5	2	67615	Strobe Harness For 68” Rack

70967: 4 Corner Strobes And Beacon On Utility Rack

Num	Q	Part Number	Description
1	1	67092	Power Harness Exterior #1
2	1	67098	Switch Harness Exterior #2
3	1	67607	Body Harness Exterior #3
4	1	67615	Strobe Harness For 68” Rack
5	1	67619	Strobe/Beacon Harn For 68” Rack

70966: Front And Rear Strobes On Utility Rack, Grip Lock, And Prolift

Num	Q	Part Number	Description
1	1	67092	Power Harness Exterior #1
2	1	67098	Switch Harness Exterior #2
3	1	67607	Body Harness Exterior #3
4/5	2	67616	Strobe Harn Front/Rear 58”/68” Rack

71053: Beacon Only On Utility Rack

Num	Q	Part Number	Description
1	1	67092	Power Harness Exterior #1
2	1	67098	Switch Harness Exterior #2
3	1	67607	Body Harness Exterior #3
5	1	67622	Beacon Harness For 58”/68” Rack

70969 / 70973: 4 Corner Strobes On Grip Lock And Prolift

Num	Q	Part Number	Description
1	1	67092	Power Harness Exterior #1
2	1	67098	Switch Harness Exterior #2
3	1	67607	Body Harness Exterior #3
4/5	2	67614	Strobe Harness For 58” Rack

70971 / 70975: 4 Corner Strobes And Beacon On Grip Lock And Prolift

Num	Q	Part Number	Description
1	1	67092	Power Harness Exterior #1
2	1	67098	Switch Harness Exterior #2
3	1	67607	Body Harness Exterior #3
4	1	67614	Strobe Harness For 58” Rack
5	1	67618	Strobe/Beacon Harn For 58” Rack

70968: Front/Rear Strobes And Beacon On Utility Rack, Grip Lock, And Prolift

Num	Q	Part Number	Description
1	1	67092	Power Harness Exterior #1
2	1	67098	Switch Harness Exterior #2
3	1	67607	Body Harness Exterior #3
4	1	67616	Strobe Harn Fr/Rr 58”/68” Rack
5	1	67620	Strobe/ Beacon Harn Front/Rear 58”/68” Rack

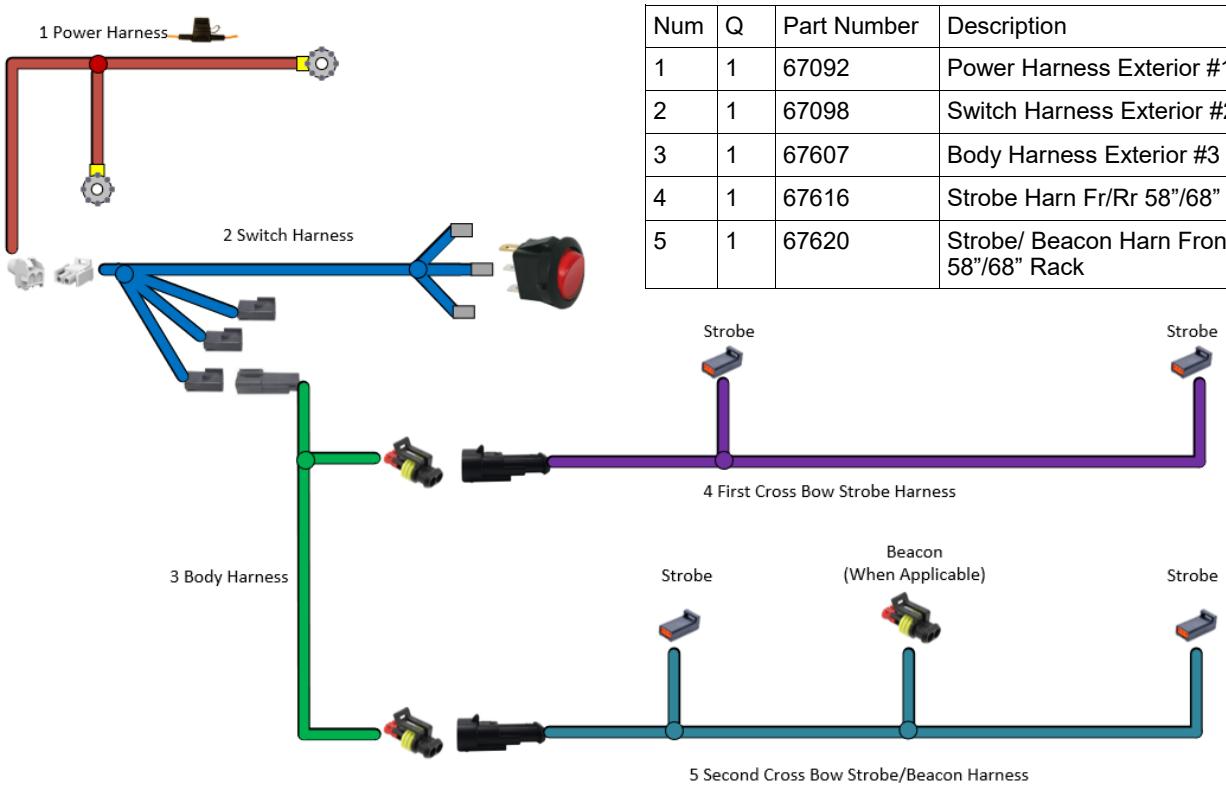

Transit Low Roof Ladder Rack Brackets And Bags

70965: 4 Corner Strobes On Utility Rack

Num	Q	Part Number	Description
N/A	1	BAG66095	Bag For Strobes On Utility Rack
1	4	67686	Ecco Plug And Play Strobes
2	4	66103-B	Strobe Bracket For Utility Rack

70969: 4 Corner Strobes On Grip Lock

Num	Q	Part Number	Description
N/A	1	BAG70965	Bag For Strobes On Grip/ Prolift
1	4	67686	Ecco Plug And Play Strobes
3	4	67130-B	Strobe Bracket For Grip Lock

70973: 4 Corner Strobes On Prolift

Num	Q	Part Number	Description
N/A	1	BAG70965	Bag For Strobes On Grip/ Prolift
1	4	67686	Ecco Plug And Play Strobes
4	4	67136-B	Strobe Bracket For Prolift

70967: 4 Corner Strobes And Beacon On Utility Rack

Num	Q	Part Number	Description
N/A	1	BAG66095	Bag For Strobes On Utility Rack
N/A	1	BAG66092	Bag For Beacon On Utility Rack
1	4	67686	Ecco Plug And Play Strobes
2	4	66103-B	Strobe Bracket For Utility Rack
6	1	70970	Beacon Assembly Kit—Boxed

70975: 4 Corner Strobes And Beacon On Prolift

Num	Q	Part Number	Description
N/A	1	BAG70965	Bag For Strobes On Grip/ Prolift
N/A	1	BAG66092	Bag For Beacon On Utility Rack
1	4	67686	Ecco Plug And Play Strobes
4	4	67136-B	Strobe Bracket For Prolift
6	1	70970	Beacon Assembly Kit—Boxed

71053: Beacon Only On Utility Rack, Grip Lock, And Prolift

Num	Q	Part Number	Description
N/A	1	BAG66092	Bag For Beacon On Utility Rack
6	1	70970	Beacon Assembly Kit—Boxed

70971: 4 Corner Strobes And Beacon On Grip Lock

Num	Q	Part Number	Description
N/A	1	BAG70965	Bag For Strobes On Grip/ Prolift
N/A	1	BAG66092	Bag For Beacon On Utility Rack
1	4	67686	Ecco Plug And Play Strobes
3	4	67130-B	Strobe Bracket For Grip Lock
6	1	70970	Beacon Assembly Kit—Boxed

70966: Front And Rear Strobes On Utility Rack, Grip Lock, and Prolift

Num	Q	Part Number	Description
N/A	1	BAG70965	Bag For Strobes On Grip/ Prolift
1	4	67686	Ecco Plug And Play Strobes
5	4	67824-B	Front/Rear Strobe Bracket All Racks

70968: Front And Rear Strobes With Beacon On Utility Rack, Grip Lock, and Prolift

Num	Q	Part Number	Description
N/A	1	BAG70965	Bag For Strobes On Grip/ Prolift
N/A	1	BAG66092	Bag For Beacon On Utility Rack
1	4	67686	Ecco Plug And Play Strobes
5	4	67824-B	Front/Rear Strobe Bracket All Racks
6	1	70970	Beacon Assembly Kit—Boxed

1	2	3	4	5	6
		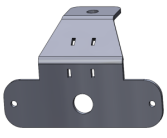	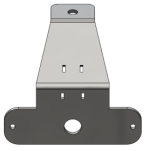		

Transit Mid Roof Ladder Rack Lighting Harnesses

Parts Reference—Only If Needed. Kit Numbers: Kit Type: Product Structures

70965: 4 Corner Strobes On Utility Rack

Num	Q	Part Number	Description
1	1	67092	Power Harness Exterior #1
2	1	67098	Switch Harness Exterior #2
3	1	67607	Body Harness Exterior #3
4/5	2	67615	Strobe Harness For 68” Rack

70967: 4 Corner Strobes And Beacon On Utility Rack

Num	Q	Part Number	Description
1	1	67092	Power Harness Exterior #1
2	1	67098	Switch Harness Exterior #2
3	1	67607	Body Harness Exterior #3
4	1	67615	Strobe Harness For 68” Rack
5	1	67619	Strobe/Beacon Harn For 68” Rack

70966: Front And Rear Strobes On Utility Rack And Prolift

Num	Q	Part Number	Description
1	1	67092	Power Harness Exterior #1
2	1	67098	Switch Harness Exterior #2
3	1	67607	Body Harness Exterior #3
4/5	2	67616	Strobe Harn Front/Rear 58”/68” Rack

71053: Beacon Only On Utility Rack, Grip Lock, And Prolift

Num	Q	Part Num-ber	Description
1	1	67092	Power Harness Exterior #1
2	1	67098	Switch Harness Exterior #2
3	1	67607	Body Harness Exterior #3
5	1	67622	Beacon Harness For 58”/68” Rack

70973: 4 Corner Strobes On Prolift Ladder Rack

Num	Q	Part Number	Description
1	1	67092	Power Harness Exterior #1
2	1	67098	Switch Harness Exterior #2
3	1	67607	Body Harness Exterior #3
4/5	2	67614	Strobe Harness For 58” Rack

70975: 4 Corner Strobes And Beacon On Prolift Ladder Rack

Num	Q	Part Number	Description
1	1	67092	Power Harness Exterior #1
2	1	67098	Switch Harness Exterior #2
3	1	67607	Body Harness Exterior #3
4	1	67614	Strobe Harness For 58” Rack
5	1	67618	Strobe/Beacon Harn For 58” Rack

70968: Front/Rear Strobes And Beacon On Utility Rack And Prolift

Num	Q	Part Number	Description
1	1	67092	Power Harness Exterior #1
2	1	67098	Switch Harness Exterior #2
3	1	67607	Body Harness Exterior #3
4	1	67616	Strobe Harn Fr/Rr 58”/68” Rack
5	1	67620	Strobe/ Beacon Harn Front/Rear 58”/68” Rack

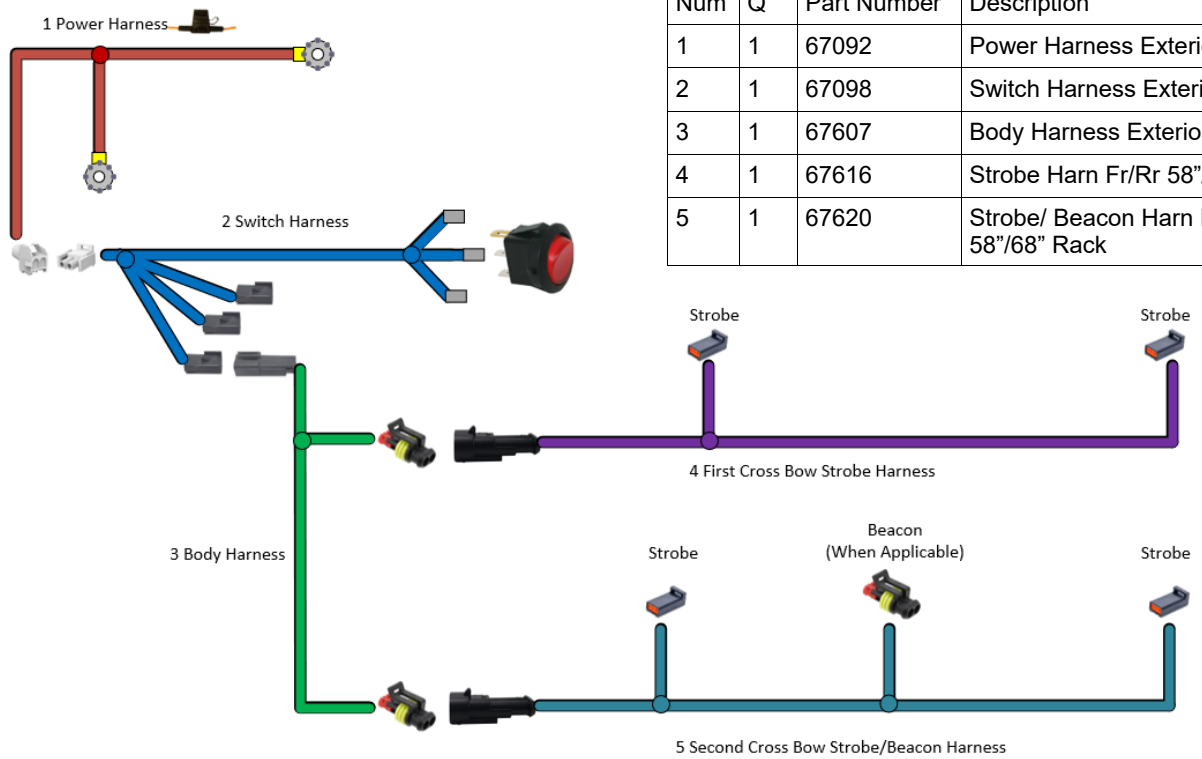

Transit Mid Roof Ladder Rack Brackets And Bags

70965: 4 Corner Strobes On Utility Rack

Num	Q	Part Number	Description
N/A	1	BAG66095	Bag For Strobes On Utility Rack
1	4	67686	Ecco Plug And Play Strobes
2	4	66103-B	Strobe Bracket For Utility Rack

70973: 4 Corner Strobes On Prolift

Num	Q	Part Number	Description
N/A	1	BAG70965	Bag For Strobes On Grip/ Prolift
1	4	67686	Ecco Plug And Play Strobes
4	4	67136-B	Strobe Bracket For Prolift

70967: 4 Corner Strobes And Beacon On Utility Rack

Num	Q	Part Number	Description
N/A	1	BAG66095	Bag For Strobes On Utility Rack
N/A	1	BAG66092	Bag For Beacon On Utility Rack
1	4	67686	Ecco Plug And Play Strobes
2	4	66103-B	Strobe Bracket For Utility Rack
6	1	70970	Beacon Assembly Kit—Boxed

70975: 4 Corner Strobes And Beacon On Prolift

Num	Q	Part Number	Description
N/A	1	BAG70965	Bag For Strobes On Grip/ Prolift
N/A	1	BAG66092	Bag For Beacon On Utility Rack
1	4	67686	Ecco Plug And Play Strobes
4	4	67136-B	Strobe Bracket For Prolift
6	1	70970	Beacon Assembly Kit—Boxed

71053: Beacon Only On Utility Rack And Prolift

Num	Q	Part Number	Description
N/A	1	BAG66092	Bag For Beacon On Utility Rack
6	1	70970	Beacon Assembly Kit—Boxed

70966: Front And Rear Strobes On Utility Rack And

Num	Q	Part Number	Description
N/A	1	BAG70965	Bag For Strobes On Grip/ Prolift
1	4	67686	Ecco Plug And Play Strobes
5	4	67824-B	Front/Rear Strobe Bracket All Racks

70968: Front And Rear Strobes With Beacon On Utility Rack And Prolift

Num	Q	Part Number	Description
N/A	1	BAG70965	Bag For Strobes On Grip/ Prolift
N/A	1	BAG66092	Bag For Beacon On Utility Rack
1	4	67686	Ecco Plug And Play Strobes
5	4	67824-B	Front/Rear Strobe Bracket All Racks
6	1	70970	Beacon Assembly Kit—Boxed

1	2	3	4	5	6
		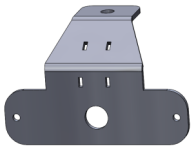	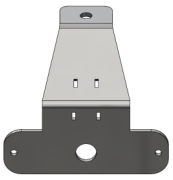		

Transit High Roof And Extended Ladder Rack Lighting Harnesses

Parts Reference—Only If Needed. Kit Numbers: Kit Type: Product Structures

71061: 4 Corner Strobes On Prolift Ladder Rack

Num	Q	Part Number	Description
1	1	67092	Power Harness Exterior #1
2	1	67098	Switch Harness Exterior #2
3	1	67603	Body Harness Exterior #1
4/5	2	67614	Strobe Harness For 58” Rack

71062: Front And Rear Strobes Prolift Ladder Rack

Num	Q	Part Number	Description
1	1	67092	Power Harness Exterior #1
2	1	67098	Switch Harness Exterior #2
3	1	67603	Body Harness Exterior #1
4/5	2	67616	Strobe Harn Front/Rear 58”/68” Rack

71054: Beacon Only On Prolift Ladder Rack

Num	Q	Part Number	Description
1	1	67092	Power Harness Exterior #1
2	1	67098	Switch Harness Exterior #2
3	1	67603	Body Harness Exterior #1
5	1	67622	Beacon Harness For 58”/68” Rack

71063: 4 Corner Strobes And Beacon On Prolift Ladder Rack

Num	Q	Part Number	Description
1	1	67092	Power Harness Exterior #1
2	1	67098	Switch Harness Exterior #2
3	1	67603	Body Harness Exterior #1
4	1	67614	Strobe Harness For 58” Rack
5	1	67618	Strobe/Beacon Harn For 58” Rack

71064: Front And Rear Strobes With Beacon On Prolift Ladder Rack

Num	Q	Part Number	Description
1	1	67092	Power Harness Exterior #1
2	1	67098	Switch Harness Exterior #2
3	1	67603	Body Harness Exterior #1
4	1	67616	Strobe Harn Fr/Rr 58”/68” Rack
5	1	67620	Strobe/ Beacon Harn Front/ Rear 58”/68” Rack

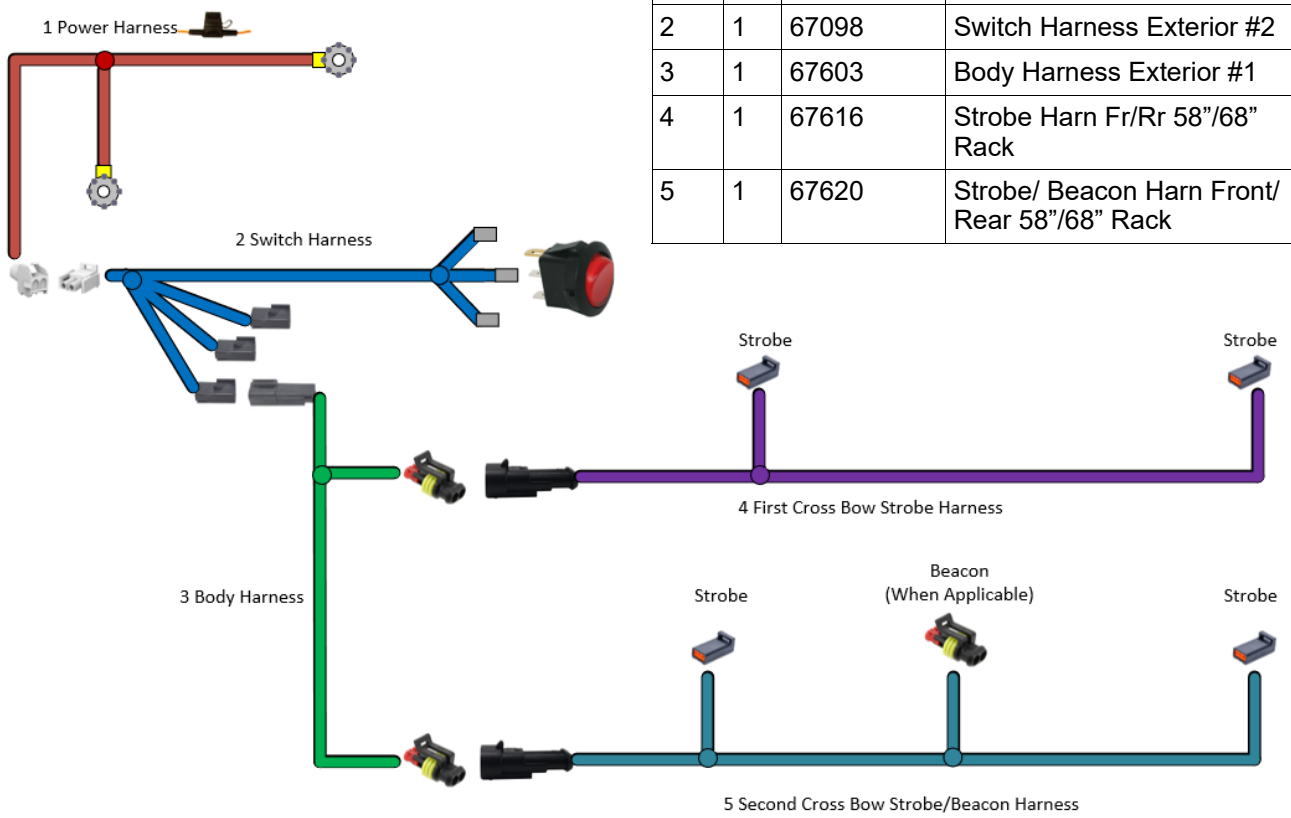

Transit High Roof And Extended Ladder Rack Brackets And Bags

71061: 4 Corner Strobes On Prolift

Num	Q	Part Number	Description
N/A	1	BAG70965	Bag For Strobes On Grip/ Prolift
1	4	67686	Ecco Plug And Play Strobes
4	4	67136-B	Strobe Bracket For Prolift

71063: 4 Corner Strobes And Beacon On Prolift

Num	Q	Part Number	Description
N/A	1	BAG70965	Bag For Strobes On Grip/ Prolift
N/A	1	BAG66092	Bag For Beacon On Utility Rack
1	4	67686	Ecco Plug And Play Strobes
4	4	67136-B	Strobe Bracket For Prolift
6	1	70970	Beacon Assembly Kit—Boxed

71054: Beacon Only On Prolift Ladder Rack

Num	Q	Part Number	Description
N/A	1	BAG66092	Bag For Beacon On Utility Rack
6	1	70970	Beacon Assembly Kit—Boxed

71062: Front And Rear Strobes On Prolift

Num	Q	Part Number	Description
N/A	1	BAG70965	Bag For Strobes On Grip/ Prolift
1	4	67686	Ecco Plug And Play Strobes
5	4	67824-B	Front/Rear Strobe Bracket All Racks

71064: Front And Rear Strobes With Beacon On Prolift Ladder Rack

Num	Q	Part Number	Description
N/A	1	BAG70965	Bag For Strobes On Grip/ Prolift
N/A	1	BAG66092	Bag For Beacon On Utility Rack
1	4	67686	Ecco Plug And Play Strobes
5	4	67824-B	Front/Rear Strobe Bracket All Racks
6	1	70970	Beacon Assembly Kit—Boxed

1	2	3	4	5	6
		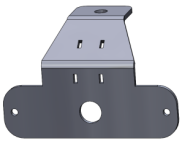	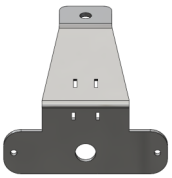		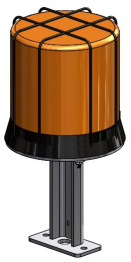

Transit Low Roof Half/Half Ladder Rack Lighting Harnesses

Parts Reference—Only If Needed. Kit Numbers: Kit Type: Product Structures

70976: 4 Corner Strobes: Half Utility / Half Grip Lock

Num	Q	Part Number	Description
1	1	67092	Power Harness Exterior #1
2	1	67098	Switch Harness Exterior #2
3	1	67607	Body Harness Exterior #3
4/5	2	67614	Strobe Harness For 58” Rack

70982: 4 Corner Strobes: Half Utility / Half Prolift

Num	Q	Part Number	Description
1	1	67092	Power Harness Exterior #1
2	1	67098	Switch Harness Exterior #2
3	1	67607	Body Harness Exterior #3
4/5	2	67614	Strobe Harness For 58” Rack

70984: 4 Corner Strobes: Half Grip Lock / Half Prolift

Num	Q	Part Number	Description
1	1	67092	Power Harness Exterior #1
2	1	67098	Switch Harness Exterior #2
3	1	67607	Body Harness Exterior #3
4/5	2	67614	Strobe Harness For 58” Rack

70986: 4 Corner Strobes With Beacon: Half Utility / Half Grip Lock

Num	Q	Part Number	Description
1	1	67092	Power Harness Exterior #1
2	1	67098	Switch Harness Exterior #2
3	1	67607	Body Harness Exterior #3
4	1	67614	Strobe Harness For 58” Rack
5	1	67618	Strobe/Beacon Harn For 58” Rack

70988: 4 Corner Strobes With Beacon: Half Utility / Half Prolift

Num	Q	Part Number	Description
1	1	67092	Power Harness Exterior #1
2	1	67098	Switch Harness Exterior #2
3	1	67607	Body Harness Exterior #3
4	1	67614	Strobe Harness For 58” Rack
5	1	67618	Strobe/Beacon Harn For 58” Rack

70994: 4 Corner Strobes With Beacon: Half Grip Lock / Half Prolift

Num	Q	Part Number	Description
1	1	67092	Power Harness Exterior #1
2	1	67098	Switch Harness Exterior #2
3	1	67607	Body Harness Exterior #3
4	1	67614	Strobe Harness For 58” Rack
5	1	67618	Strobe/Beacon Harn For 58” Rack

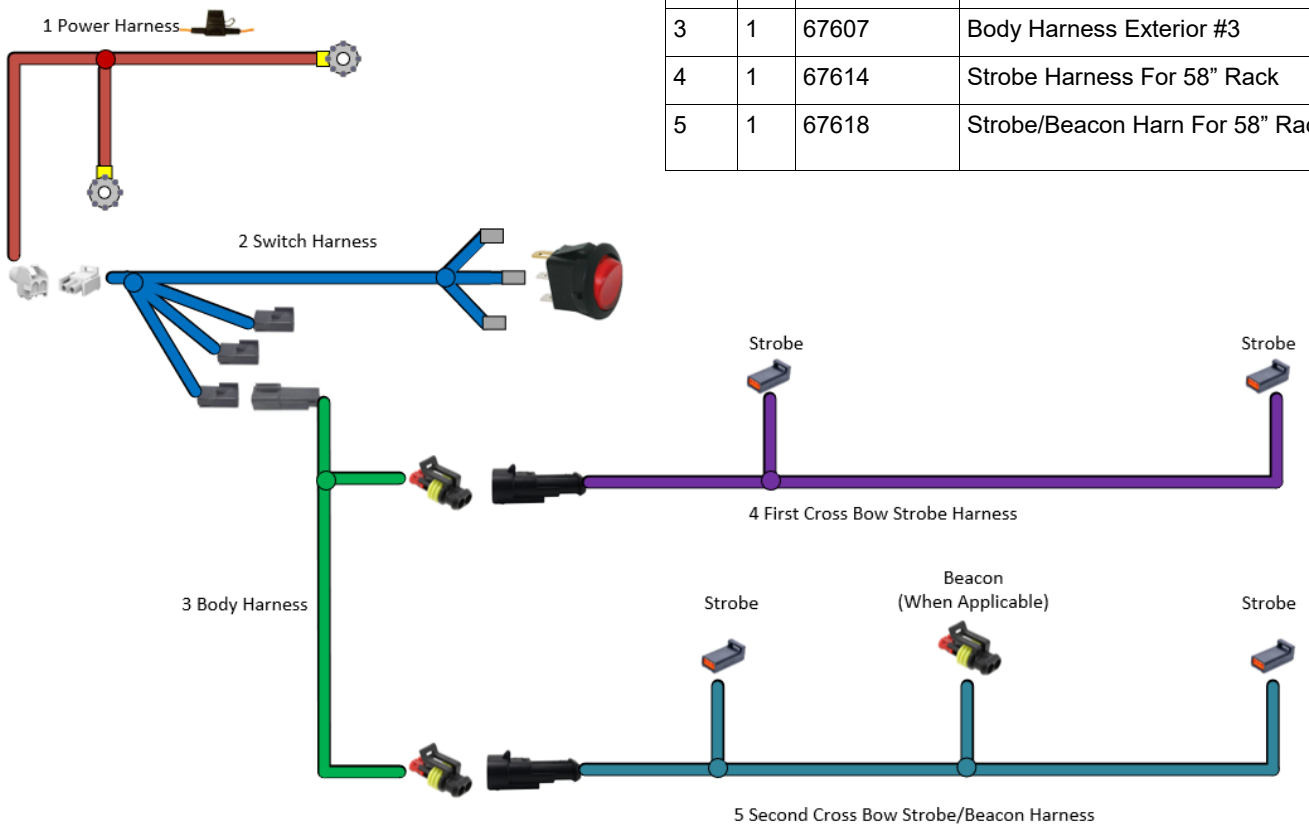

Transit Low Roof Half/Half Ladder Rack Brackets And Bags

70976: 4 Corner Strobes: Half Utility / Half Grip Lock

Num	Q	Part Number	Description
N/A	1	BAG66095	Bag For Strobes On Utility Rack
N/A	1	BAG70965	Bag For Strobes On Grip/ Prolift
1	4	67686	Ecco Plug And Play Strobes
2	2	66103-B	Strobe Bracket For Utility Rack
3	2	67130-B	Strobe Bracket For Grip Lock

70982: 4 Corner Strobes: Half Utility / Half Prolift

Num	Q	Part Number	Description
N/A	1	BAG66095	Bag For Strobes On Utility Rack
N/A	1	BAG70965	Bag For Strobes On Grip/ Prolift
1	4	67686	Ecco Plug And Play Strobes
2	2	66103-B	Strobe Bracket For Utility Rack
4	2	67136-B	Strobe Bracket For Prolift

70984: 4 Corner Strobes: Half Grip Lock / Half Prolift

Num	Q	Part Number	Description
N/A	1	BAG70965	Bag For Strobes On Grip/ Prolift
1	4	67686	Ecco Plug And Play Strobes
3	2	67130-B	Strobe Bracket For Grip Lock
4	2	67136-B	Strobe Bracket For Prolift

70986: 4 Corner Strobes With Beacon: Half Utility / Half Grip Lock

Num	Q	Part Number	Description
N/A	1	BAG70965	Bag For Strobes On Grip/Prolift
N/A	1	BAG66092	Bag For Beacon On Utility Rack
N/A	1	BAG66095	Bag For Strobes On Utility Rack
1	4	67686	Ecco Plug And Play Strobes
2	2	66103-B	Strobe Bracket For Utility Rack
3	2	67130-B	Strobe Bracket For Grip Lock
6	1	70970	Beacon Assembly Kit—Boxed

70988: 4 Corner Strobes With Beacon: Half Utility / Half Prolift

Num	Q	Part Number	Description
N/A	1	BAG66095	Bag For Strobes On Utility Rack
N/A	1	BAG66092	Bag For Beacon On Utility Rack
N/A	1	BAG70965	Bag For Strobes On Grip/Prolift
1	4	67686	Ecco Plug And Play Strobes
2	2	66103-B	Strobe Bracket For Utility Rack
4	2	67136-B	Strobe Bracket For Prolift
6	1	70970	Beacon Assembly Kit—Boxed

70994: 4 Corner Strobes With Beacon: Half Grip Lock / Half Prolift

Num	Q	Part Number	Description
N/A	1	BAG70965	Bag For Strobes On Grip/Prolift
N/A	1	BAG66092	Bag For Beacon On Utility Rack
1	4	67686	Ecco Plug And Play Strobes
3	2	67130-B	Strobe Bracket For Grip Lock
4	2	67136-B	Strobe Bracket For Prolift
6	1	70970	Beacon Assembly Kit—Boxed

1	2	3	4	5	6
		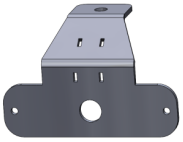	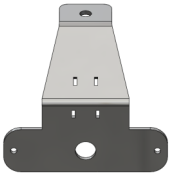		

Transit Mid Roof Half/Half Ladder Rack Lighting Harnesses

Parts Reference—Only If Needed. Kit Numbers: Kit Type: Product Structures

70982: 4 Corner Strobes: Half Utility / Half Prolift

Num	Q	Part Number	Description
1	1	67092	Power Harness Exterior #1
2	1	67098	Switch Harness Exterior #2
3	1	67607	Body Harness Exterior #3
4/5	2	67614	Strobe Harness For 58” Rack

70988: 4 Corner Strobes With Beacon: Half Utility / Half Prolift

Num	Q	Part Number	Description
1	1	67092	Power Harness Exterior #1
2	1	67098	Switch Harness Exterior #2
3	1	67607	Body Harness Exterior #3
4	1	67614	Strobe Harness For 58” Rack
5	1	67618	Strobe/Beacon Harn For 58” Rack

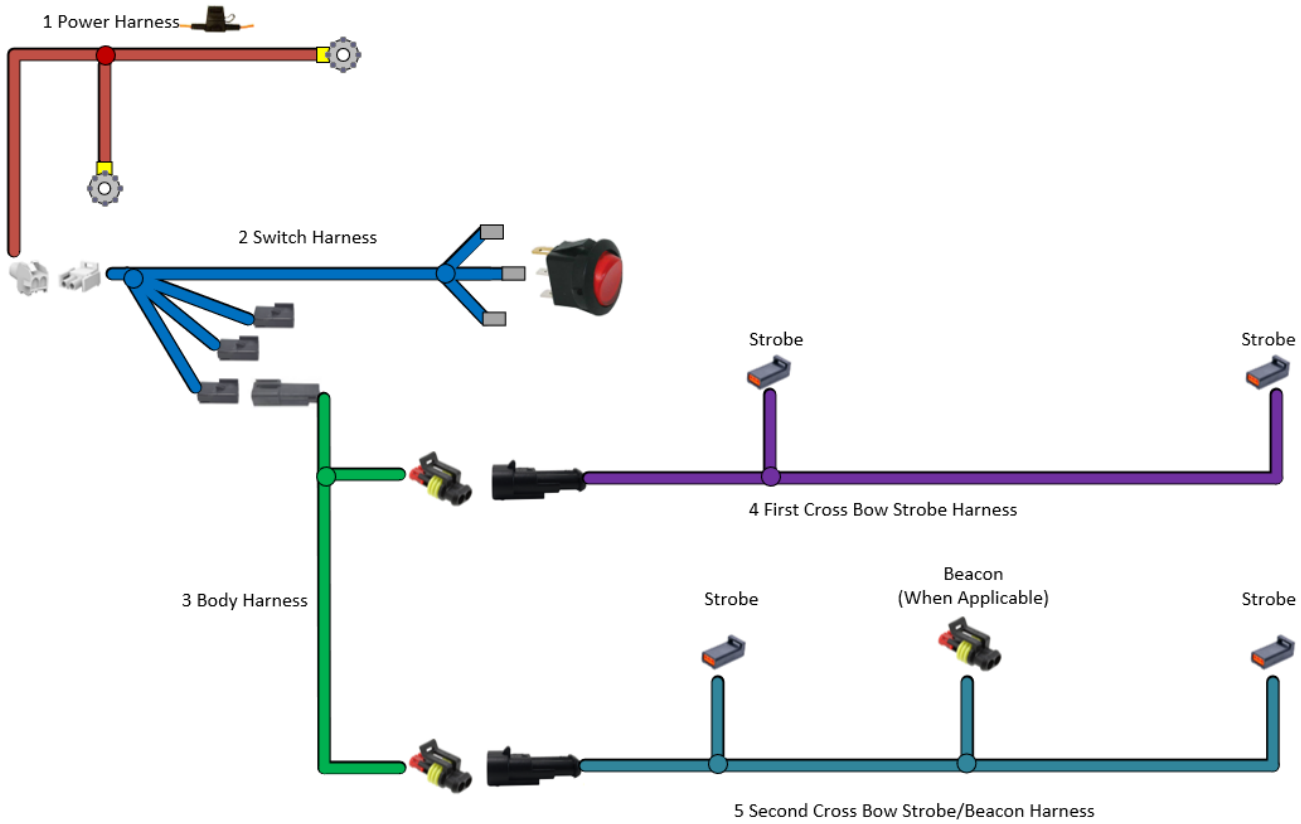

Transit Mid Roof Half/Half Ladder Rack Brackets And Bags

70982: 4 Corner Strobes: Half Utility / Half Prolift

Num	Q	Part Number	Description
N/A	1	BAG66095	Bag For Strobes On Utility Rack
N/A	1	BAG70965	Bag For Strobes On Grip/ Prolift
1	4	67686	Ecco Plug And Play Strobes
2	2	66103-B	Strobe Bracket For Utility Rack
4	2	67136-B	Strobe Bracket For Prolift

70988: 4 Corner Strobes With Beacon: Half Utility / Half Prolift

Num	Q	Part Number	Description
N/A	1	BAG66095	Bag For Strobes On Utility Rack
N/A	1	BAG66092	Bag For Beacon On Utility Rack
N/A	1	BAG70965	Bag For Strobes On Grip/ Prolift
1	4	67686	Ecco Plug And Play Strobes
2	2	66103-B	Strobe Bracket For Utility Rack
4	2	67136-B	Strobe Bracket For Prolift
6	1	70970	Beacon Assembly Kit—Boxed

1	2	3	4	5	6
		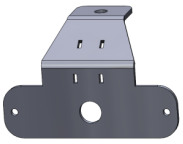	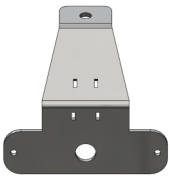		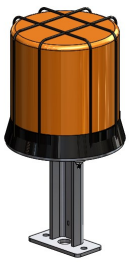

Fastener Bags

Note: Not all components in the bags will be used on every install

BAG66095 For utility rack strobe kit only:

ITEM NO.	PART NUMBER	DESCRIPTION	QTY.
1	BAG0406-A	4" x 6" 3MIL AUTOBAG	1
2	FAS0501	NUT,HEX NLK 8-32 SS	8
3	FAS0502	SCREW,FHPSD 12-14X1.00 SS	8
4	FAS0503	SCREW,RHP 8-32X.75 SS	8
5	65314	Vented Plastic Submersible Cord Grip	2
6	66843	Nylon Clamp 3/8" ID	14
7	FAS0842	SCREW,FHP TEK 18-8X.5 SS	14

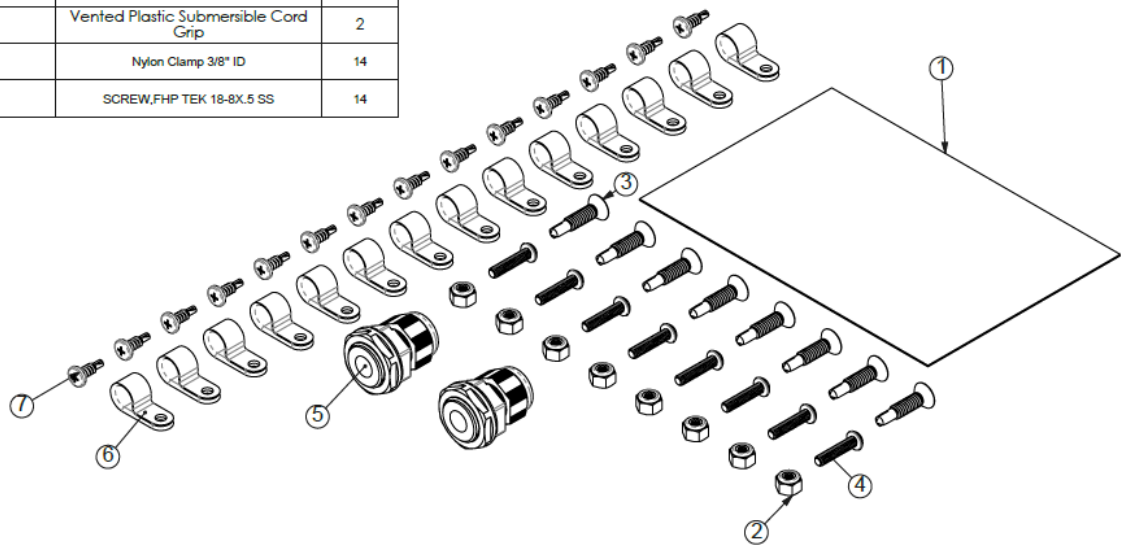

BAG66092 For all ladder rack beacon kits:

ITEM NO.	PART NUMBER	DESCRIPTION	QTY.
1	BAG0406-A	4" x 6" 3MIL AUTOBAG	1
2	35335-0	SLIDE, 1.5" / AD RAIL	2
3	FAS0799	Screw, Hex Hd, 5/16-18x0.75 SS	2
4	FAS0588	Washer, Lock, Split, 5/16, SS	2
5	FAS0552	Washer, Flat, 5/16, SST	2
6	66843	Nylon Clamp 3/8" ID	7
7	FAS0842	SCREW,FHP TEK 18-8X.5 SS	7
8	64831	REAR ROLLER, SPACER	1
9	65314	Vented Plastic Submersible Cord Grip	1

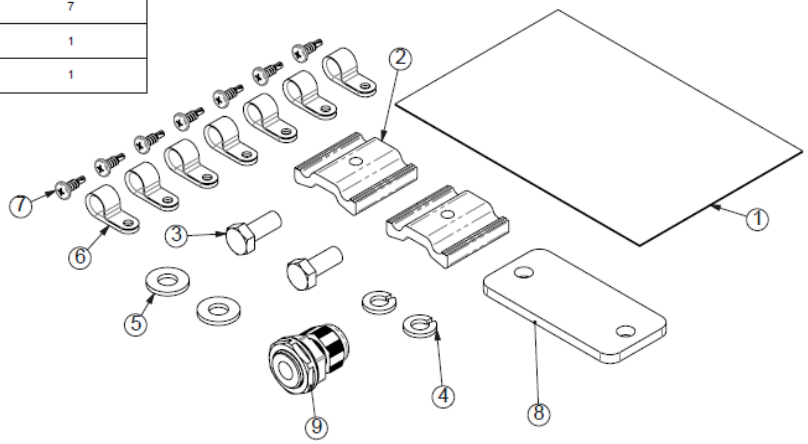

BAG70965 For all grip lock and prolift rack strobe kits -4 corner strobes and front / rear strobes:

ITEM NO.	PART NUMBER	DESCRIPTION	QTY.
1	BAG0406-A	4" x 6" 3MIL AUTOBAG	1
2	FAS0501	NUT,HEX NLK 8-32 SS	8
3	FAS0503	SCREW,RHP 8-32X.75 SS	8
4	66843	Nylon Clamp 3/8" ID	16
5	FAS0842	SCREW,FHP TEK 18-8X.5 SS	16
6	FAS0398	BOLT,CRG 5/16-18X1.0 SS	8
7	63933	UTILITY, COM MOUNT PLATE	4
8	FAS0861	NUT,HEX NLK FLG 5/16-18SS	8

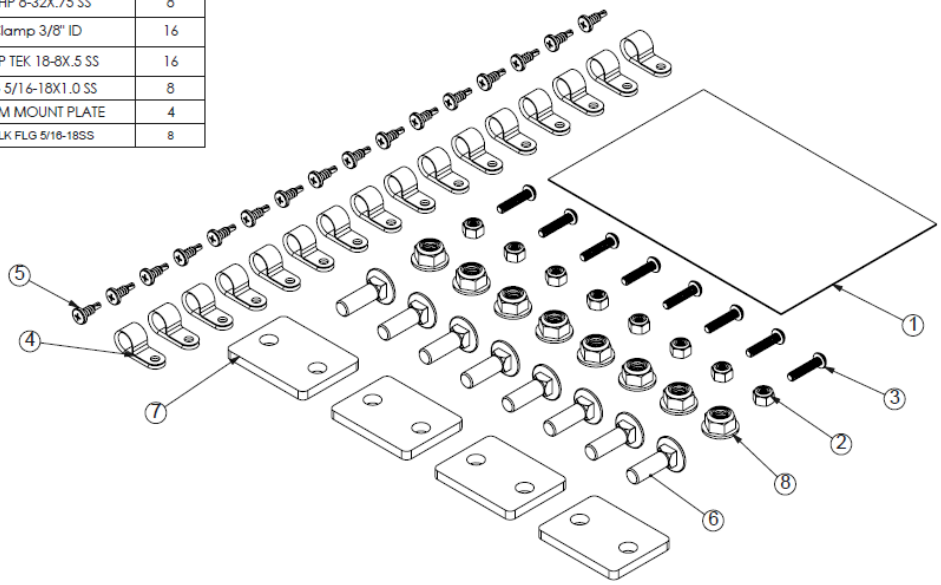

****Important note: Installing the beacon hardware, strobes, and wiring may be much easier to do before installing anything onto the ladder rack cross bows. Also, before installation of the ladder rack to the vehicle.****

67618 Cross Bow Harness Reference Diagram:

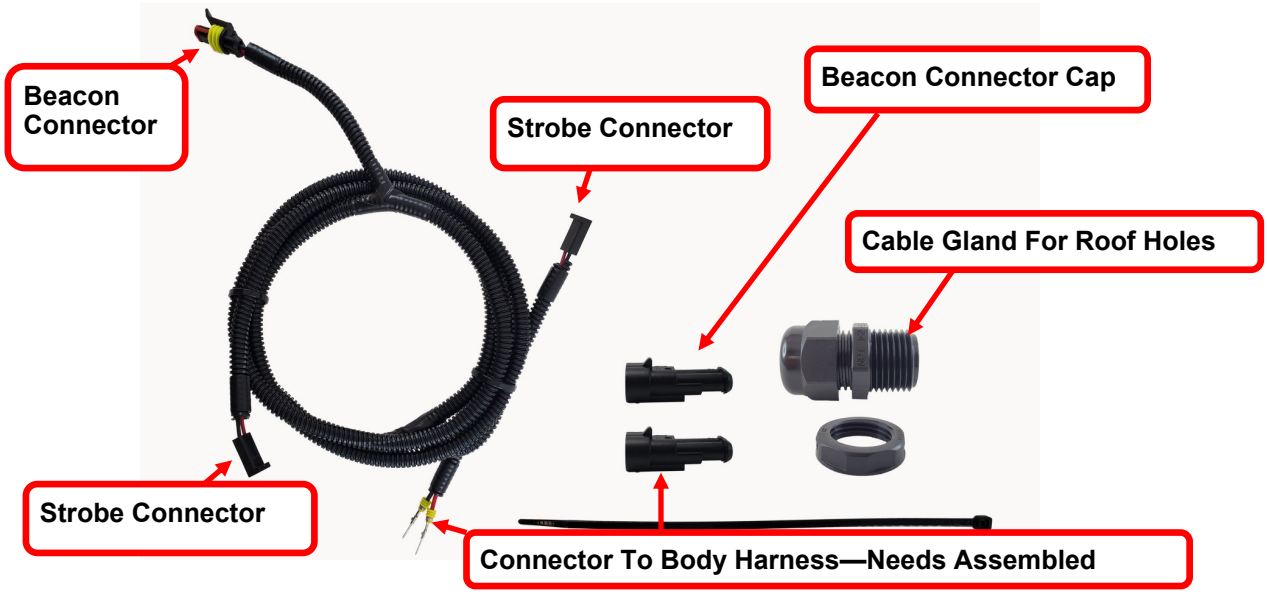

Placements

Switch placement: Under Steering Wheel



Corner Strobes: On Corners Of All Ladder Rack Cross Bows





*****TORQUE STROBES TO 10-IN-LB'S MAXIMUM*****

Beacon: Middle Of Rear Cross Bow

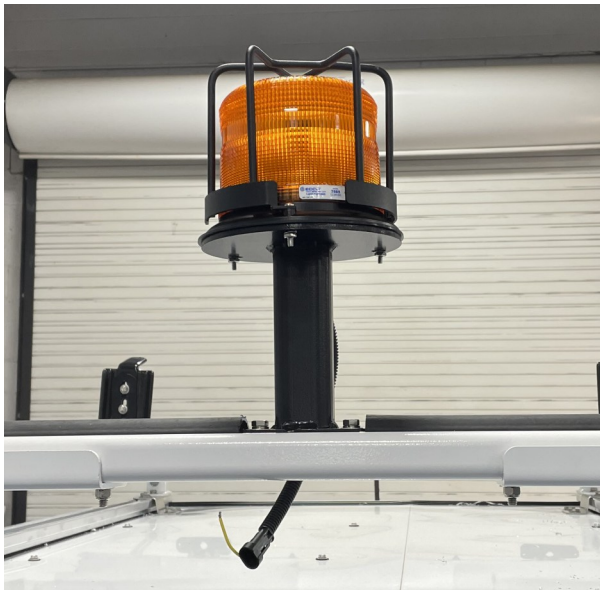

Front / Rear Strobes: Middle Of Cross Bows



The purpose of plug and play lighting is to be completely modular. Due to this feature, refer to the order drawing for all exact lighting placements. These installation instructions are for most cases and for reference. Not all installs will have strobes or beacons. Reference the instructions for only what you are installing.

Routing Overview

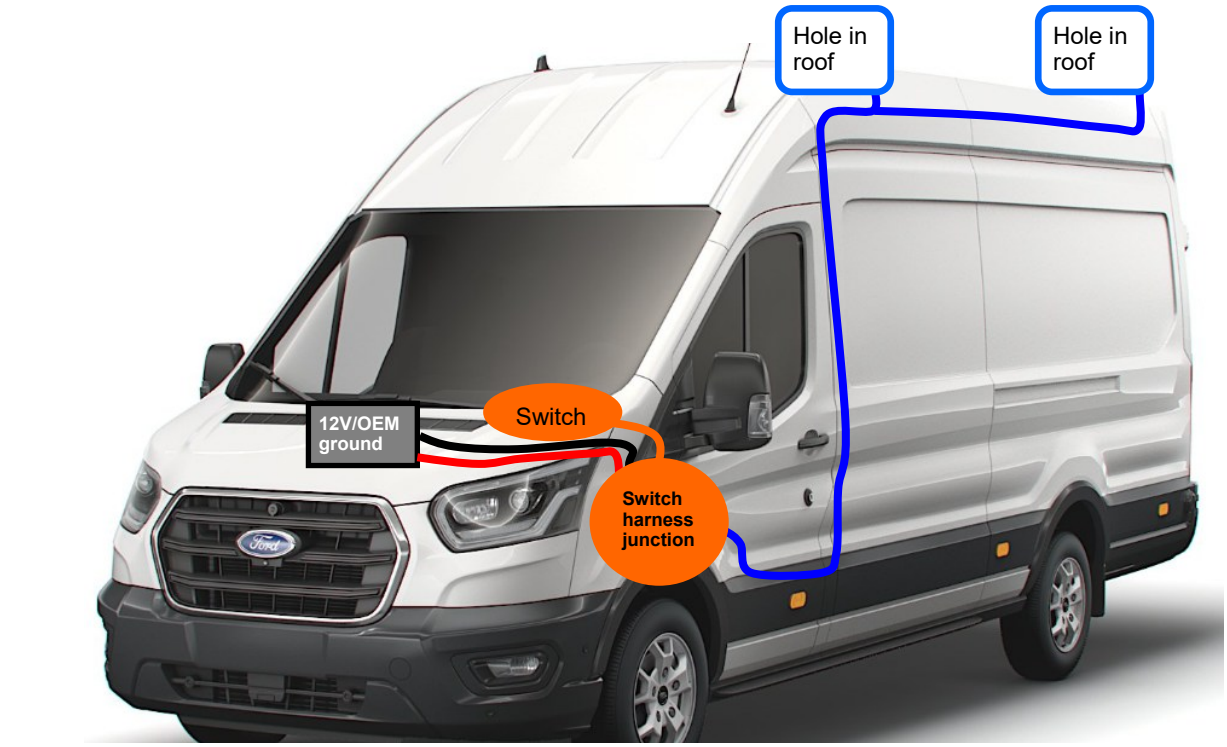

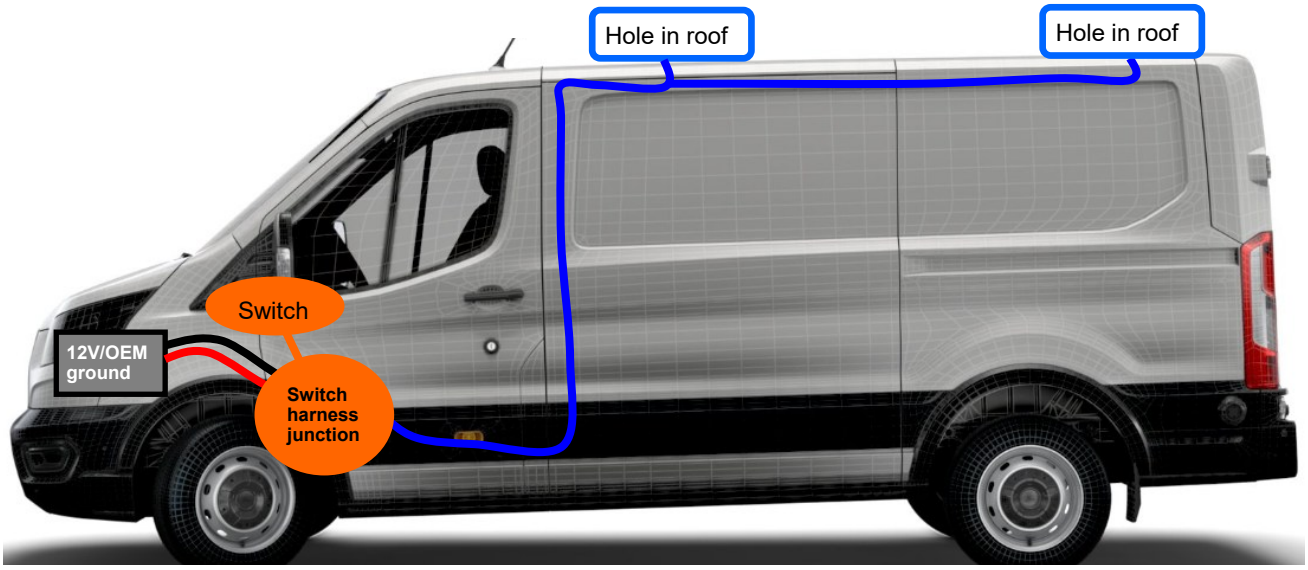

Color	Key - Items
Red/Black	Power harness: Battery to kick panel
Orange	Switch harness: Switch in dash
Blue	Body Harness: Switch to ladder rack harnesses

Corner Strobes Routing: All Racks

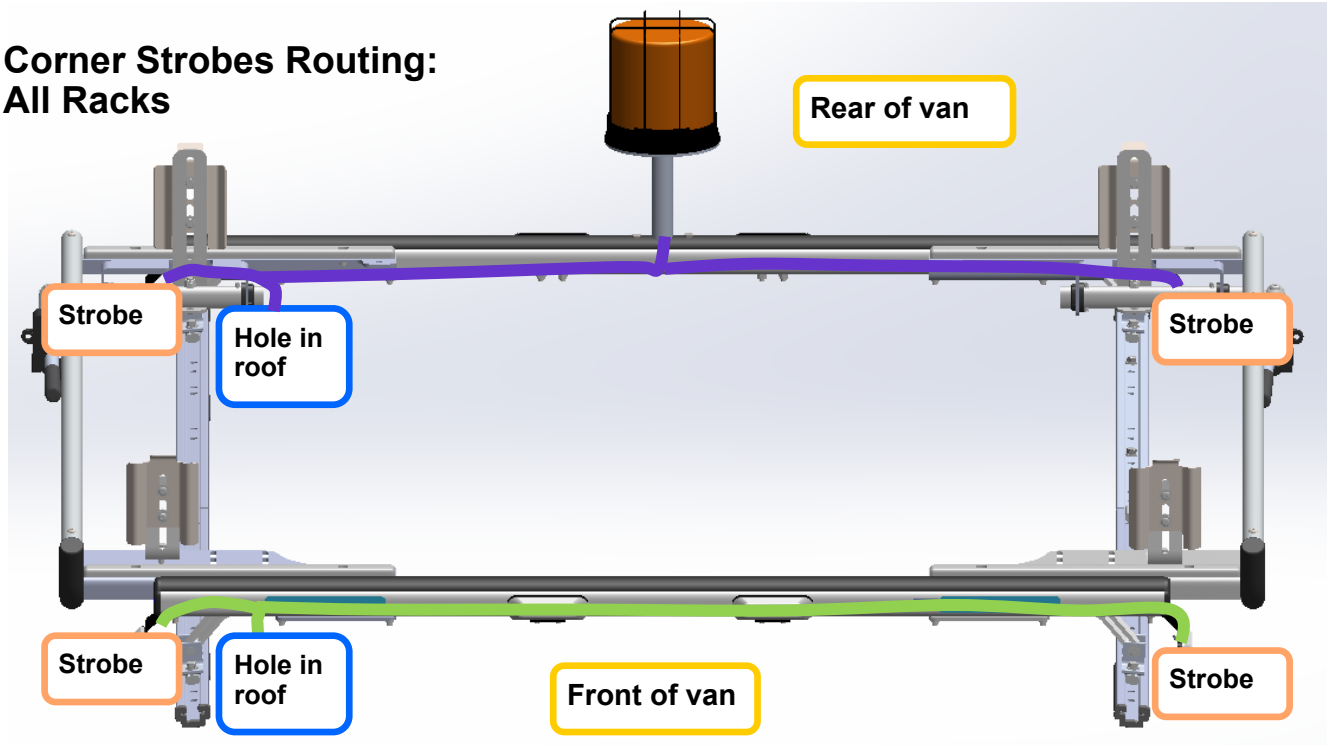

Color	Key - Items
Green	Front Cross Bow Strobe Harness
Purple	Rear Cross Bow Strobe / Beacon Harness

Front/Rear Strobe Routing: All Racks

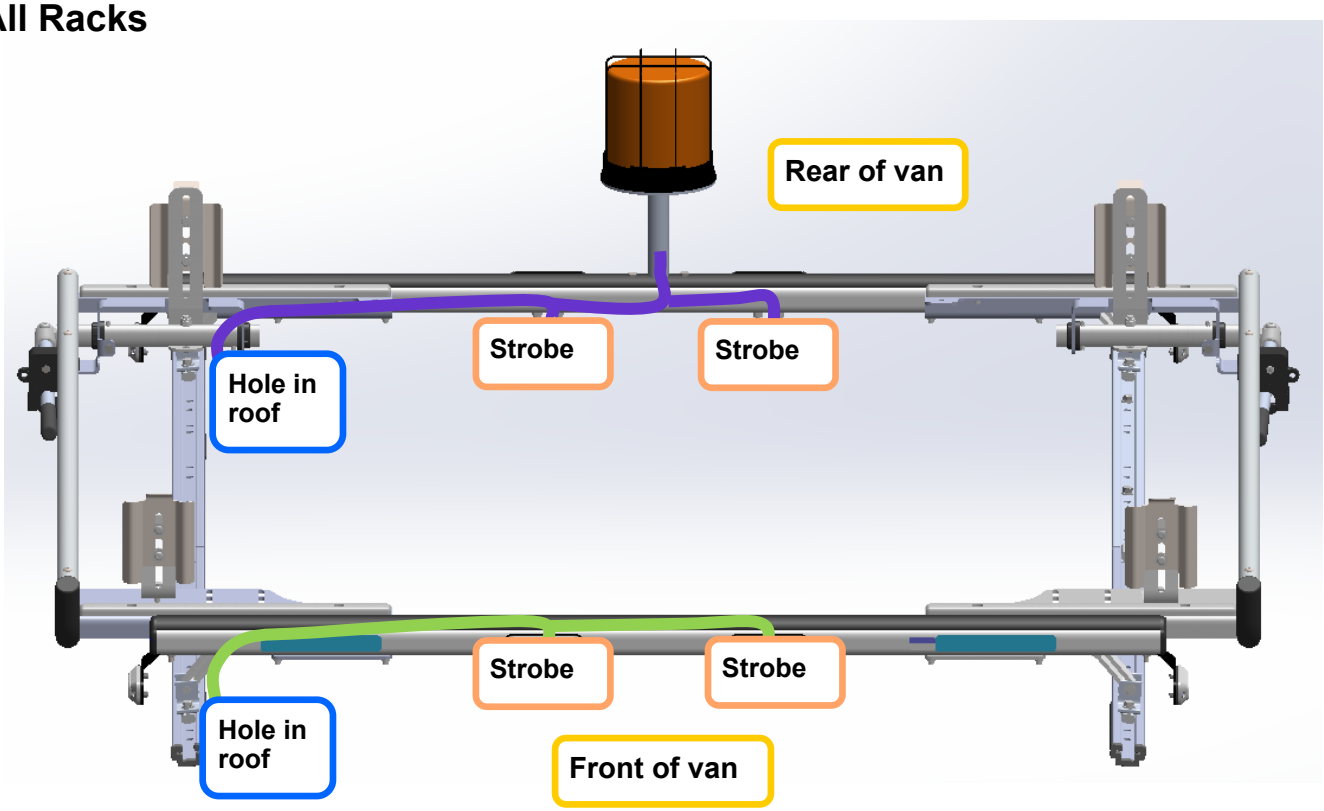

Utility Rack Routing

FRONT

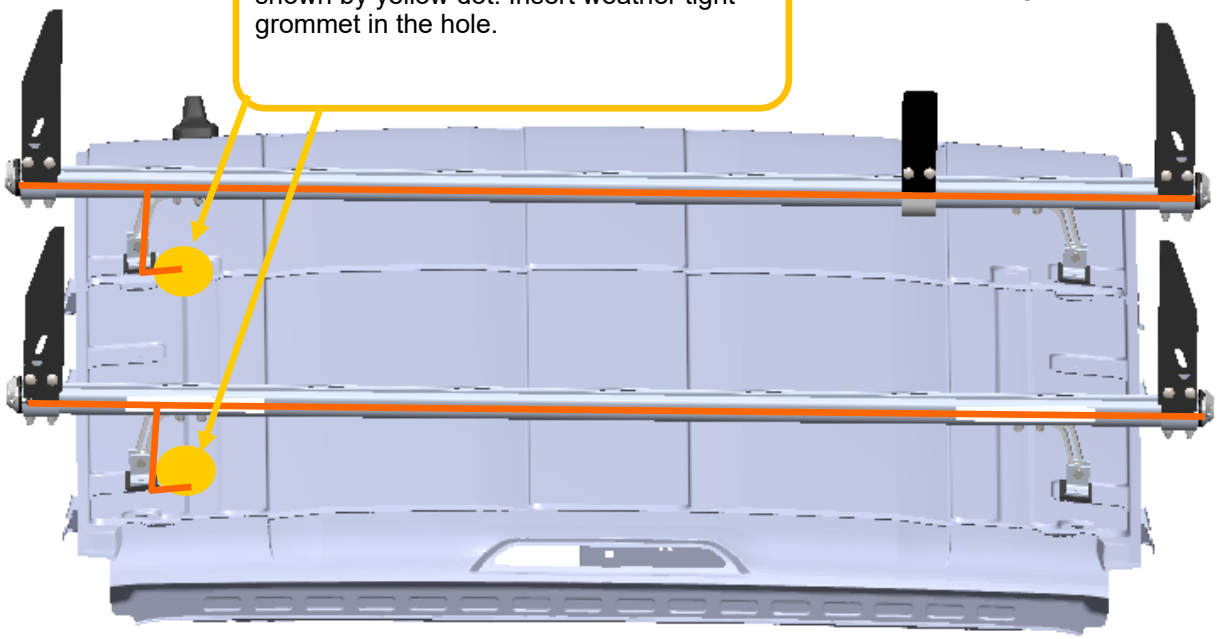

Drill hole in rail through the channels, to the right of the foot mount. (Shown Below) in orange.

Routing shown in orange. Route through the hole/grommet in roof, up the foot, then to both strobes. Route using the upper channel.

If need be, route the wires using the bottom channel. Then use the self tapping screws and nylon clips to secure the wiring.

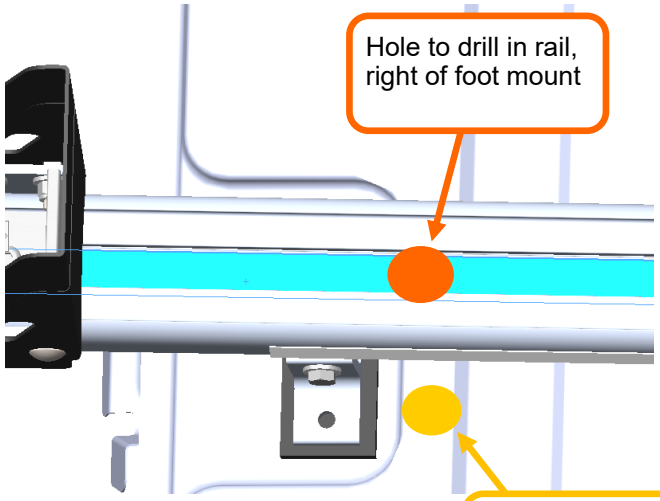

Beginning Install

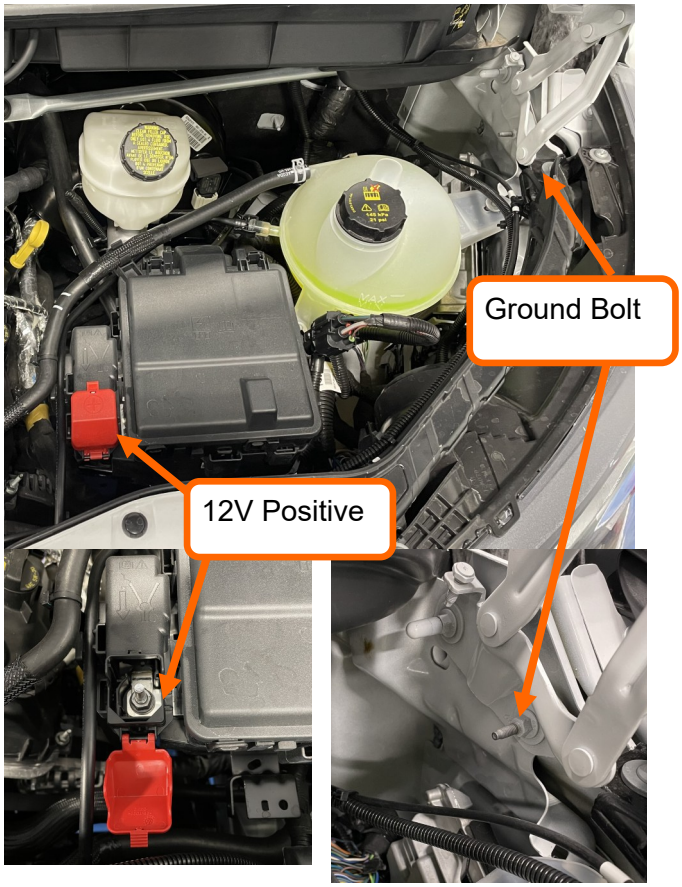

Step 1: Locate the power harness #67092.

Remove the fuse from the inline fuse holder until he end of the install

Under the hood:
Locate the 12V Power point on the fuse block and the OEM ground bolt on the driver's side body frame.

Step 2:
Attach the red wire with the ring terminal to the 12V positive post.

Attach the black wire with the ring terminal to the OEM ground post.

Route the white connector end towards the cab and locate the OEM grommet (to the cab).
Secure with zip ties.

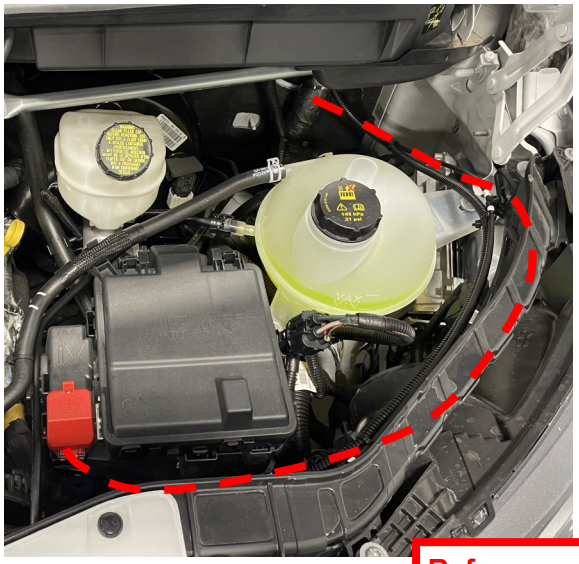

Step 3: Route the white connector end of the harness towards the cab and locate the OEM grommet. Routing path shown in red. Secure with zip ties.
Cut/drill a hole in the grommet to route the power harness through. Make sure to leave a drip loop with the harness.

Silicone the grommet holes/wiring once all harnesses have been routed through.

Reference Pg. 3 for routing through the firewall.



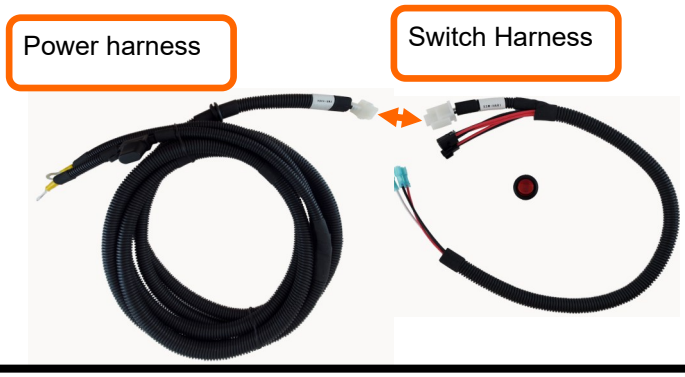

Step 4: Continue routing the power harness up into the knee bolster area.

Locate the switch harness #67098

Connect the switch harness connector to the power harness in the kick panel area.





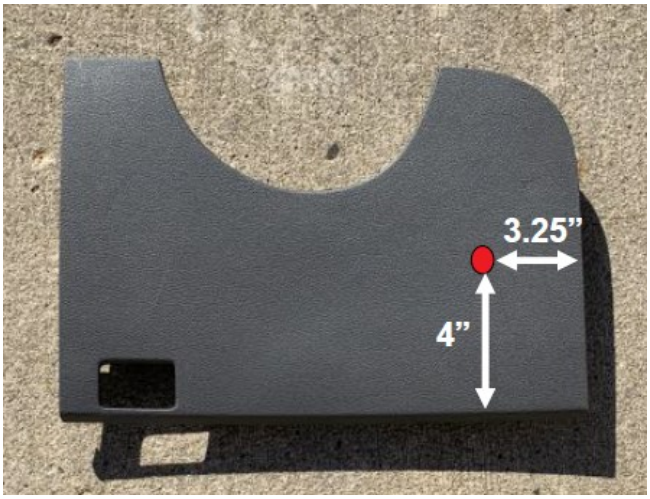

Step 5: Remove the knee bolster beneath the steering wheel.

Drill a hold in the trim panel for the switch: The button location is 3.25” from the right side edge and 4” above the bottom edge of the knee bolster panel.

A hole diameter of 3/4” (19mm) is necessary to install the snap in switch (do not insert switch yet).
Figure 8.3.

If an inverter switch is already in this place, move the strobe switch to the left of the inverter switch, directly in line with it.



Step 6: Route the switch end of the switch harness under the steering column behind the panel and through the opening in the trim panel. AVOID MOVING/ROTATING OBJECTS. Secure with zip ties.

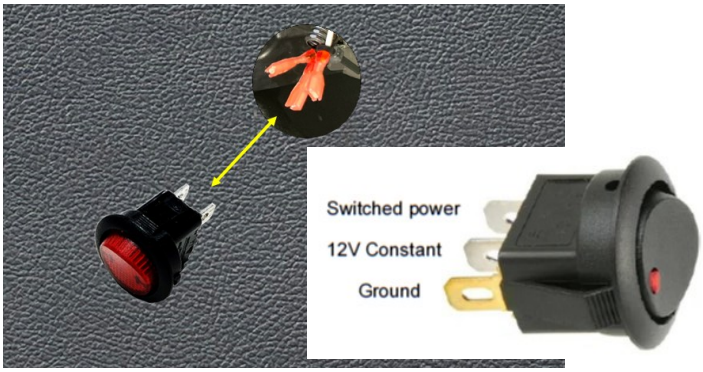

Connect the ground spade to the gold pin on the rocker switch

Connect the white battery power spade to the opposite terminal on the switch.

Connect the red spade to the middle pin.

Insert the switch into the hole and place the strobe/beacon decal (if supplied) around the switch.

Reassemble all trim and secure wiring.

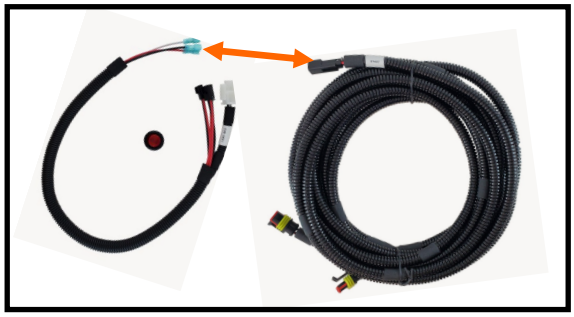

Step 7: Locate the body harness:
Transit Low and Mid roof: 67607
Transit High Roof and Extended: 67603

Connect the harness to the switch harness (one of the remaining unused connectors) in the driver's foot well.



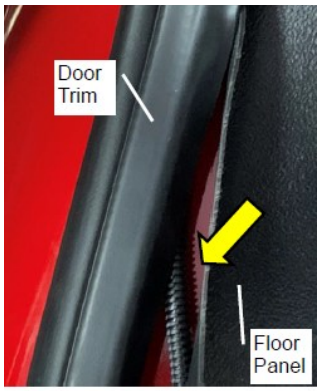

Step 8: Locate the driver's side door sill area.

Carefully pull the rubber door trim up and route the strobe harness down to the floor.

Replace the rubber trim back into its original position.

Continue routing the harness down to the floor, under the sill trim, and under the driver's seat.

See figure for the routing path in red.



Re-insert trim that was pulled up after routing.



Route the body harness up the backside of the partition and rearward following the OEM harness on the driver's side wall.

Loosely secure the wiring to the OEM harness, as you may need to adjust the harness once the ladder rack has been installed and holes have been drilled in the roof.

The first body harness connector to the ladder rack harness should be loosely placed where the front cross bow will sit. Then the second connector should be placed loosely where the rear cross bow will sit.

Please note there will be slack in the harness, tie these up with zip ties.

Once the ladder rack harnesses are connected to the body harness, you can completely secure the body harness.

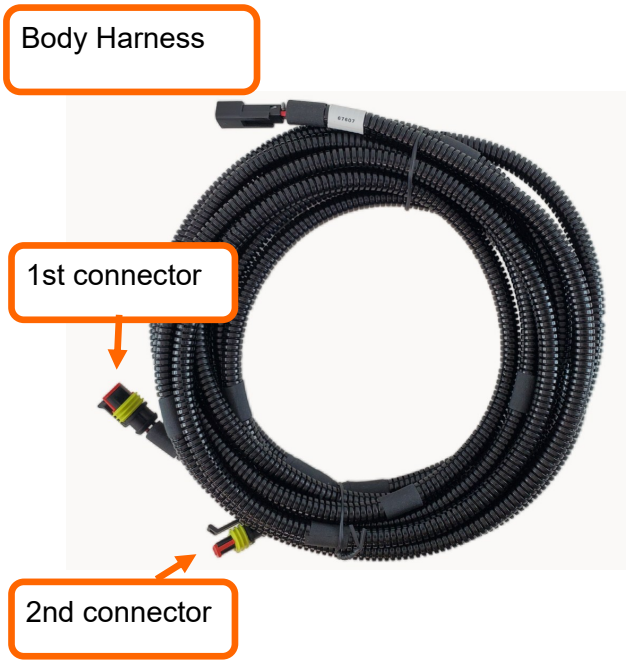

Please read carefully for next steps to the install:

You will not need to reference the entirety of the following instructions. You will only need to reference per the install you are completing.

Please note there are many configurations of the ladder racks. Refer to the order drawing for type of ladder rack per each side of the vehicle. (There can half grip lock / half prolift / half utility rack, full grip lock, full prolift, full utility rack, etc). Then assemble the corresponding bracketry per each ladder rack. Note there are different brackets for the strobes for the utility rack, grip lock, and prolift. For any uncertainties please refer to pages 4-15 for the needed harnesses and bracketry per the kit installing.

Please note the following strobe brackets per ladder rack:
Front/rear strobe brackets:67824-B
Utility rack corners: 66103-B
Grip lock corners: 67130-B
Prolift corners: 67136-B

Utility Rack Corner Strobe Install

Note: utility rack wiring will be ran inside the cross bow channels of the ladder rack for 4 corner strobes.



Step 1: Locate the strobe harnesses for both the front and rear cross bows.

List of applicable part numbers:
67614 - 58” cross bow corner strobe harness
67615 - 68”cross bow corner strobe harness
67618 - 58” cross bow corner strobe with beacon harness
67619 - 68” cross bow corner strobe with beacon harness

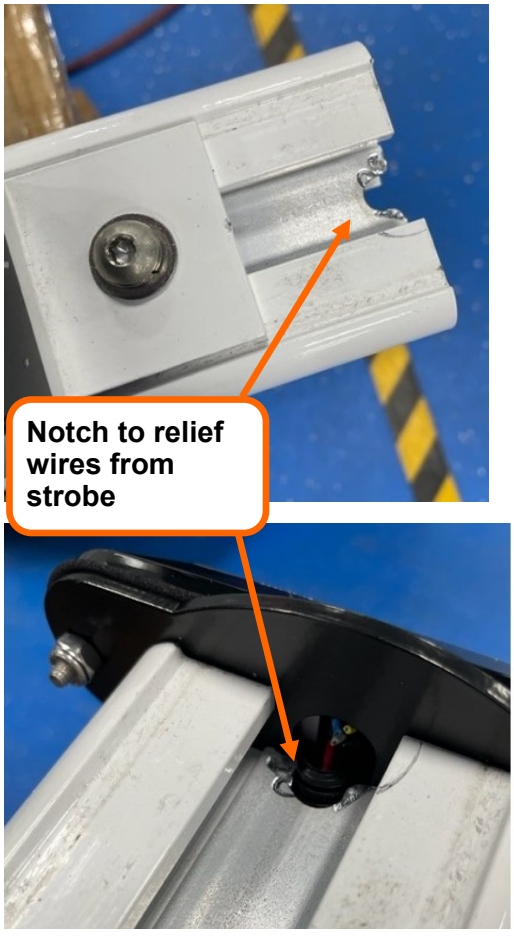

Step 2: Preassemble wiring and lights to the utility rack before mounting to the roof of the van.

The channel you will use to route the wire harness will depend on the utility rack uprights being installed onto the rack.

If the uprights use the upper channel for mounting, use the bottom channel for wire routing. And Vise Versa.

You may also need to go back and fourth between the upper and lower channel depending on the utility rack accessories. Drill a 3/8” hole in the rack to move the wire harness between the two channels

If using the bottom channel immediately after the strobe, notch the utility rack middle, to relieve space for the strobe wires. See pictures to the left for reference.

Use the self taping screws and nylon clips to secure wiring if using the bottom channel.

Be sure NOT TO PINCH any wiring when tightening down utility rack accessories with sides



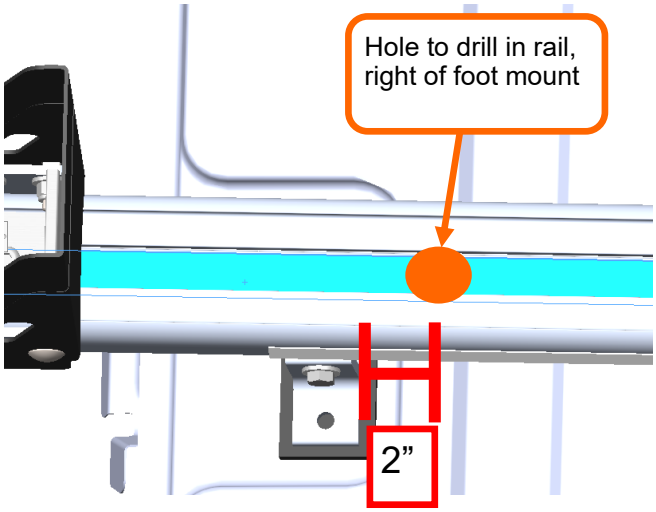

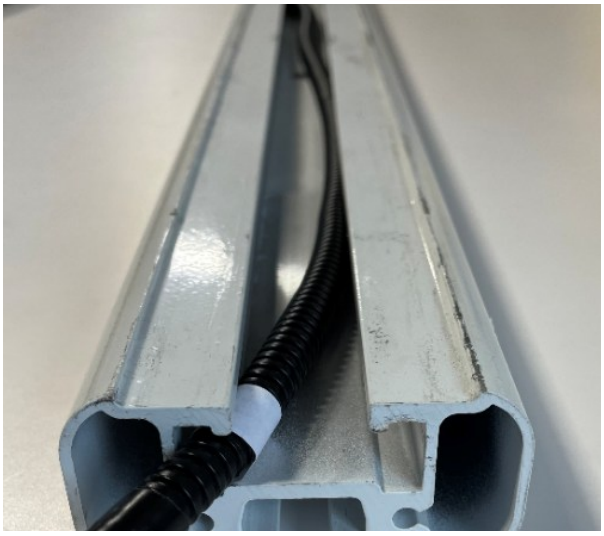

Step 3: Route the wires between the strobes (on both racks)

Option 1: (The preferred option)
Drill a 3/8” hole from the top channel to the bottom channel, 2 inches to the right of the where the foot mounts to the rail.

Route the wires in the top rail channel (before inserting the weather strip).

Option 2: Route the wiring in the underside of the channel. You will need to drill a 3/8” hole from the top channel to the bottom channel directly under the beacon mount if there is a beacon installation for this build. This hole should directly in the middle of the crossbow. If the cross bow is 68”, the hole should be 34” from the end. If the cross bow is 58”, the hole should be 29” from the end.

Use the supplied tek screws (FAS0842) and nylon clips (66843) to secure the wiring under the utility rack.

Where you route the wires will depend on what all options you are installing on the utility rack.

If you are installing a few accessories onto the rail that mount to the bottom channel, use the top channel for wire routing. Or vise versa.

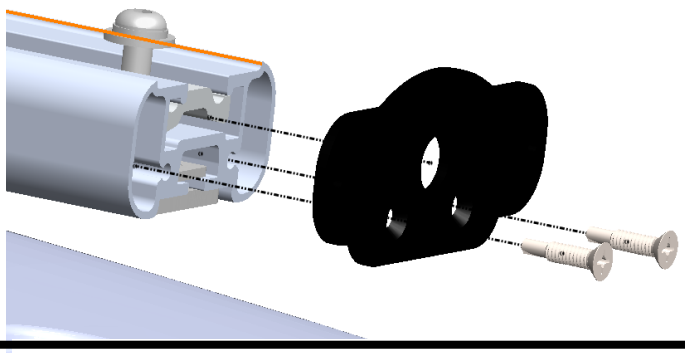

Step 4: Using BAG66095: Mount the strobe bracket to the rail using the supplied self drilling screws (FAS0502). Use a No.3 philips head driver.

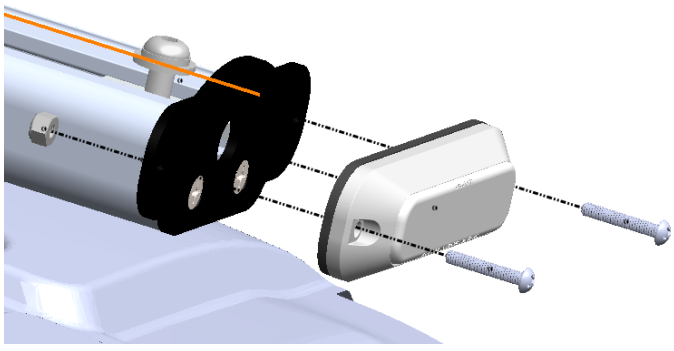

Step 5: Route the strobe wires through the center hole slot of the strobe bracket.

Connect the strobe to the harness connector.

Mount the strobe light to the bracket using the small Philips head screws (FAS0503) and nylon nuts (FAS0501).

Do steps 4 and 5 for all 4 utility rack ends.

Beacon Install For Ship Thru—Non Drive-A-Way Vehicles. For ALL Racks—Stowed Beacon

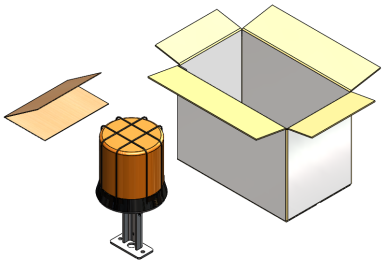

Step 1: Locate the beacon box assembly (this will be in a brown box) labeled 70970 Stow this into the vehicle (if not a drive-a-way vehicle). If this is a drive-a-way vehicle, please follow the dealer instructions inside the beacon assembly box (part number 70972) once these instructions are completed. Or skip to the next page.

Step 2: Locate the fastener bag BAG66092.
Grab the 2 identical spacers, part number 35335-0. Insert them (note orientation of the spacers) into the top channel of the rear cross bow rail. Slide them to middle of the cross bow rail.

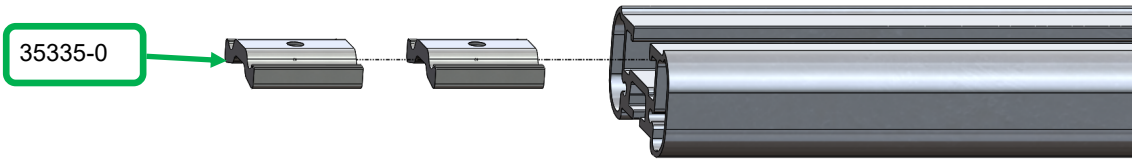

Step 3: Locate the flat spacer (64831), 5/16 bolts(FAS0799), lock washers (FAS0588), and flat washers (FAS0552). Once the spacers from the previous step are in the middle of the cross bow, insert the bolts through the lock washers, flat washers, then flat spacer, into the 35335-0 spacers. Tighten these down so they cannot slide.

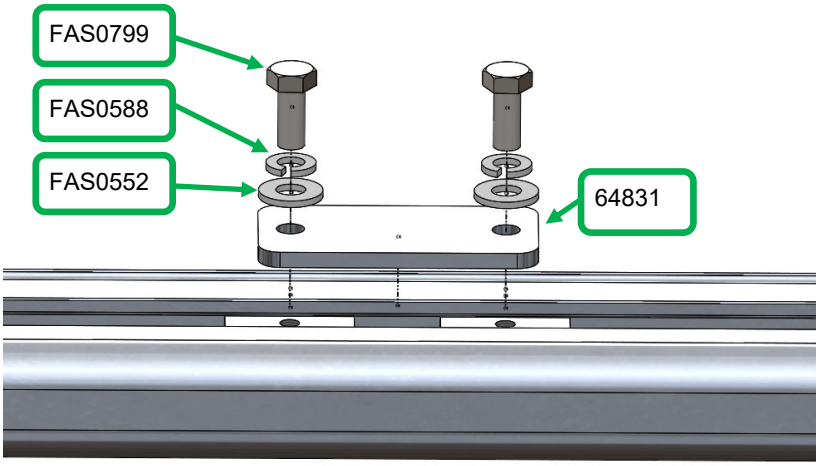



Place the beacon connector cap (found in the harness bag) over the weather proof connector (on the cross bow harness) to keep from water damage.

Beacon Install For Drive-A-Way Vehicles: Not Stowed

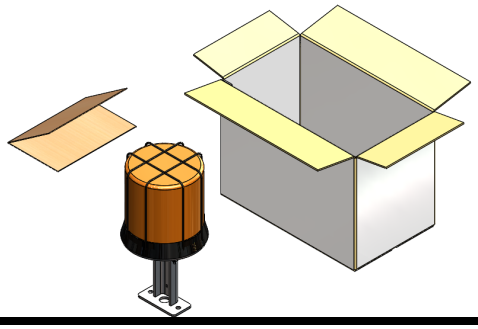

Step 1: Locate the beacon assembly box 70970. Open the box and remove the assembly and instructions.

Locate the fastener bag BAG66092 and grab the 5/16 bolts(FAS0799), lock washers (FAS0588),flat washers (FAS0552), and the rail spacers (35335-0) .

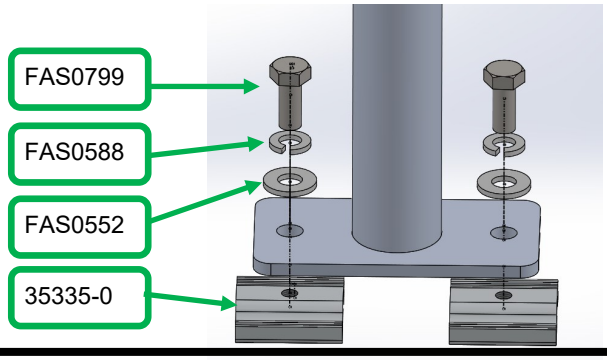

Step 2: Assemble the beacon mount feet by inserting the bolts (FAS0799) through the lock washers (FAS0588) then flat washers (FAS0552) then through the foot into the slides (35335-0). Do not tighten down at this point.

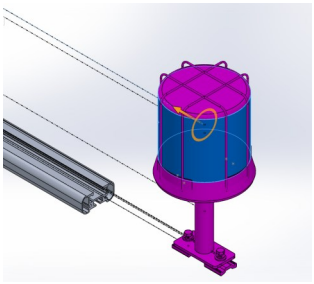

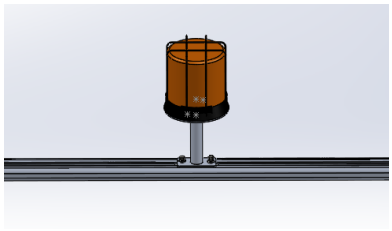

Step 3: Slide the beacon/mount to the center of the rail.

Note for Utility Racks: Be cautious of the wire sliding through the rail.

Tighten the bolts once you have positioned the beacon in the center.

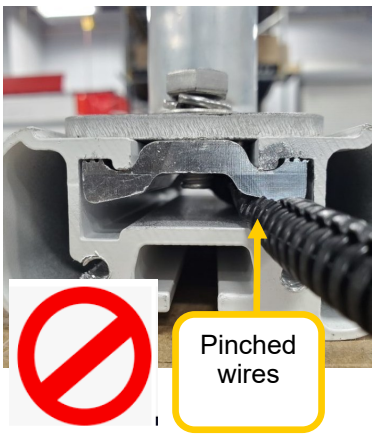



****Utility Rack risk and anytime you use the top channel for routing the beacon harness through.****

*****Be cautious the wires are not pinched after tightening the slides*****

Connect the beacon harness connector to the beacon. Please note routing to the beacon can be different between each rack, as some will be routed using the top channel, some will use the bottom channel, and some will be routed on the outside of the channel up to the beacon. This will strictly depend on the install and what is best for the installer at this time.

Grip Lock And Prolift Rack—Corner Strobes

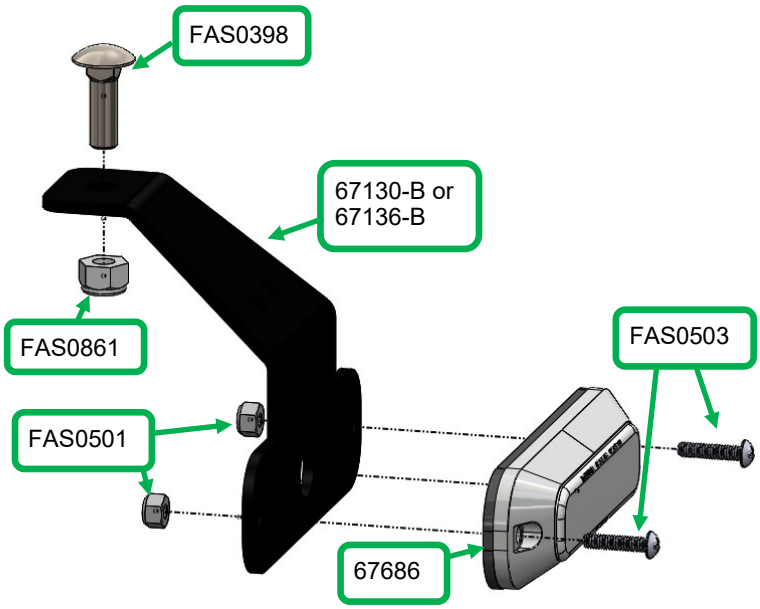

Step 1: Using BAG70965: Assemble the strobe light to the grip lock bracket (67130-B) or prolift bracket (67136-B) using the small philips head screws and nylon nuts. (2 X FAS0501 and 2 X FAS0503). Note orientation of the bracket and the strobe light.

Now insert the 5/16 carriage bolt (FAS0398) through the top of the bracket hole. Thread the 5/16 nylon bolt (FAS0861) on the bolt but do not tighten yet.

Pull the strobe connector through the hole in the strobe bracket. Secure the wiring with zip ties using the slots in the brackets.

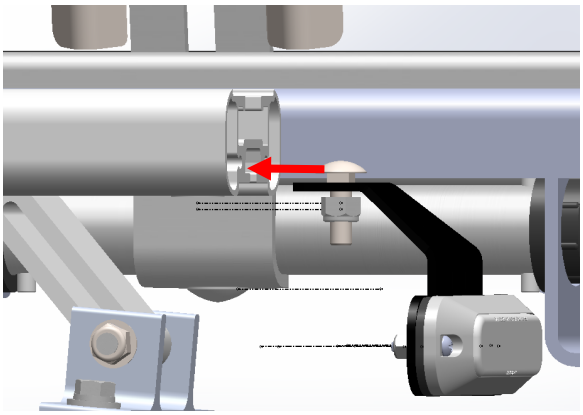

Step 2: Slide the nylon nut into the bottom channel of the cross bow. Once it is just far enough in the cross bow to clear the end cap, you can tighten the bolt to the nut to secure the bracket. Then insert the end cap onto the cross bow.

Do this for all the corners of the ladder rack that require a strobe.

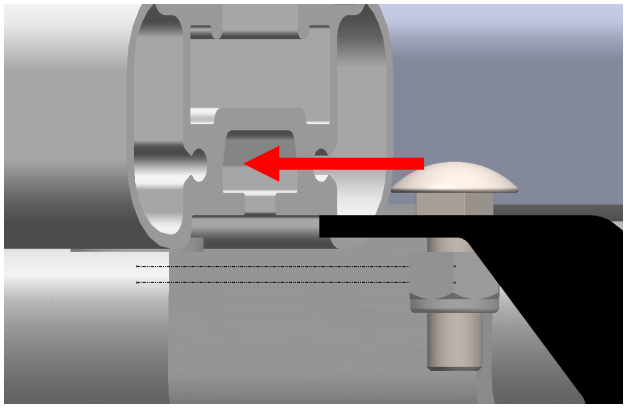

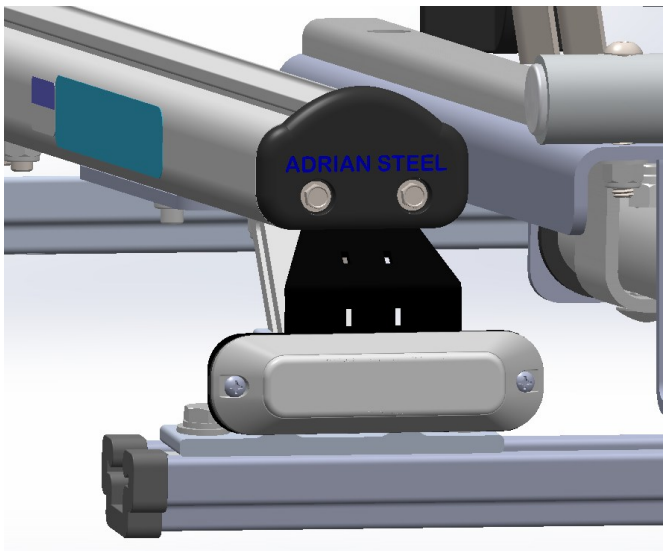



Step 3: Locate the strobe harnesses for both the front and rear cross bows.

List of applicable part numbers:
67614 - 58” cross bow corner strobe harness
67615 - 68”cross bow corner strobe harness
67618 - 58” cross bow corner strobe with beacon harness
67619 - 68” cross bow corner strobe with beacon harness

Identify the wire end with the terminals WITHOUT the connector. This end will route through the cable gland / hole in the roof and connect to the body harness inside the van.

Step 4: Keep the terminal end without the connector on the drivers side of the ladder rack. Locate the strobe connector end that is closest to the non-connector end, and connect it to the strobe on the drivers side of the vehicle. Run the wiring across the cross bow and connect the opposing end to the passenger side strobe. Do this for the front and rear cross bows / strobes.



Step 5: Use the small self tapping screws (FAS0842) and the nylon clamps (66843) to secure the wiring. The ideal routing path is on the insides of the ladder rack cross bows. If this is not applicable, route the wiring under the cross bows. **Do not secure wiring to any moving objects.**



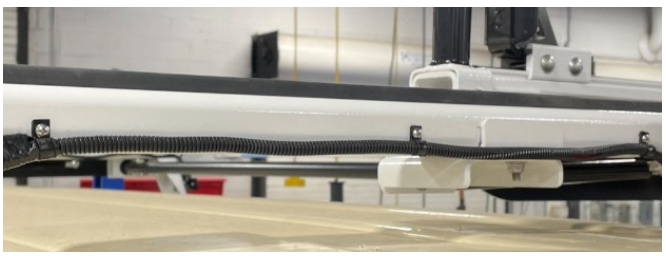

All Ladder Racks—Front And Rear Strobes

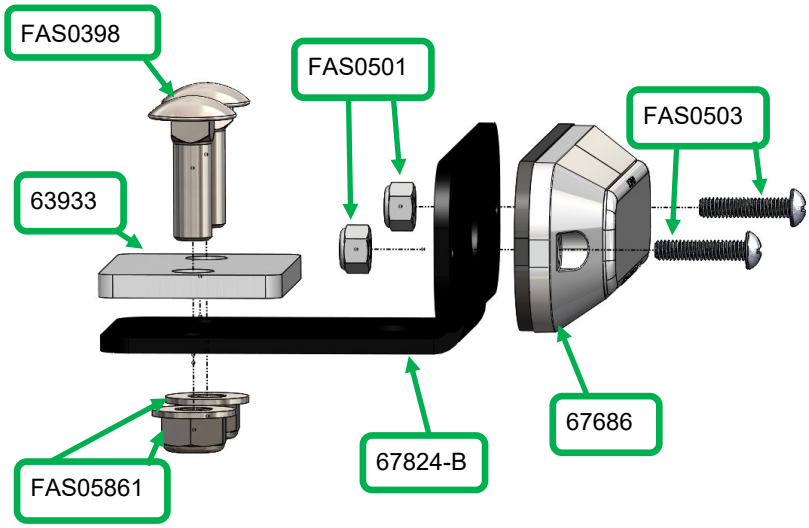

Step 1: Using BAG70965:
Assemble the strobe light to the bracket (67824-B) using the small philips head screws and nylon nuts. (2 X FAS0501 and 2 X FAS0503).

Now insert the 2 5/16 carriage bolts (FAS0398) through the spacer (63933) holes then through bracket holes. Thread the 2 5/16 nylon bolts (FAS0861) onto the carriage bolts but do not tighten yet.
Note orientation of the bracket, bolts, nuts, and the spacer.



Step 2: Pull the strobe connector through the hole in the strobe bracket. Secure the wiring with zip ties using the slots in the brackets.

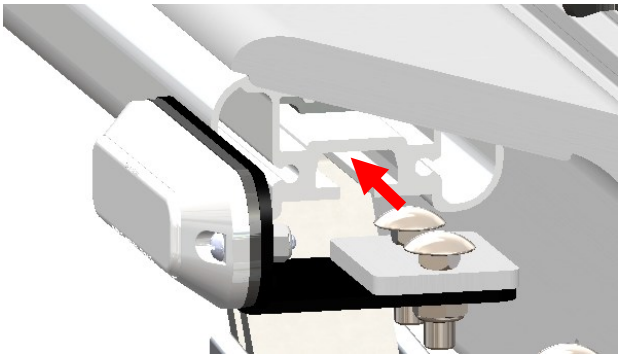

Step 3: Slide the carriage bolt heads into the bottom channel of the ladder rack cross bar until the desired locations of the strobes. These strobes can be placed in various spots across the cross bow. Ideal locations is to have them symmetrical from the center. Be sure to have enough wiring to get to each connector on the harness.

Note the strobe locations will change based off each rack due to the ladder rack components on the cross bow.

Picture below is an example of the grip lock.

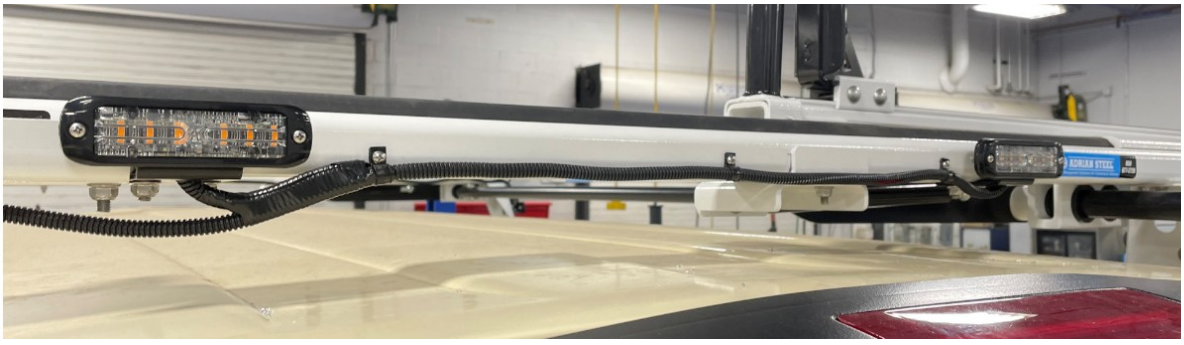



Step 4: Locate the strobe harnesses for both the front and rear cross bows.

List of applicable part numbers:
67616 - Front and rear strobes harness
67620 - Front and rear strobes with beacon harness

Identify the wire end with the terminals WITH-OUT the connector. This end will route through the cable gland / hole in the roof and connect to the body harness inside the van.

Step 5: Keep the terminal end without the connector on the drivers side of the ladder rack. Locate the strobe connector end that is closest to the non connector end, and connect it to the strobe on the drivers side of the vehicle. Run the wiring across the cross bow and connect the opposing end to the passenger side strobe. Do this for the front and rear cross bows / strobes.

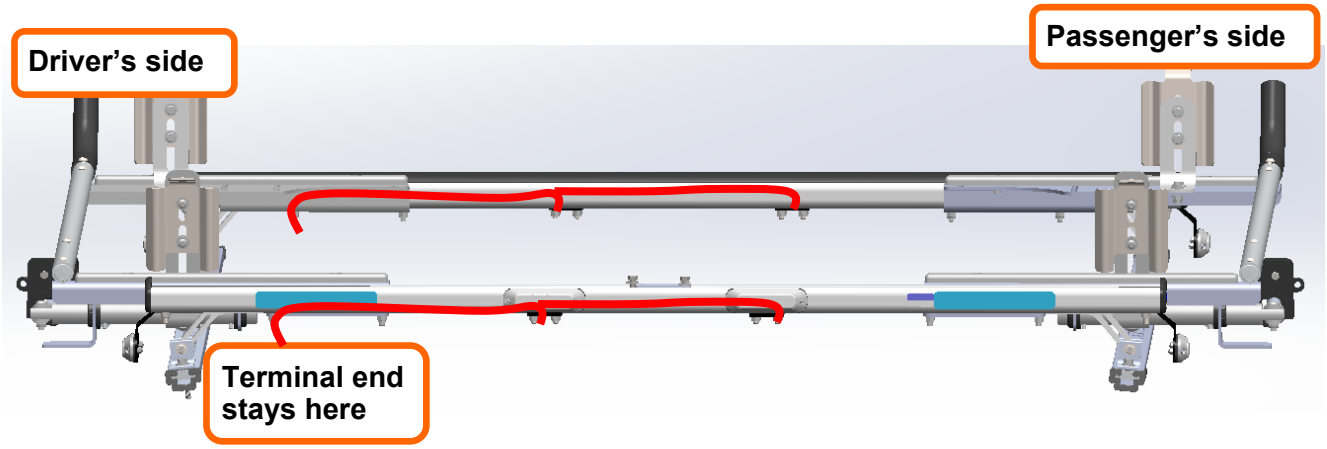

Step 6: Use the small self tapping screws (FAS0842) and the nylon clamps (66843) to secure the wiring. The ideal routing path is on the insides of the ladder rack cross bows. If this is not applicable, route the wiring under the cross bows. **Do not secure wiring to any moving objects.** **Use the harness to help determine the locations of the strobes. Once fully determined, tighten down the strobe brackets.

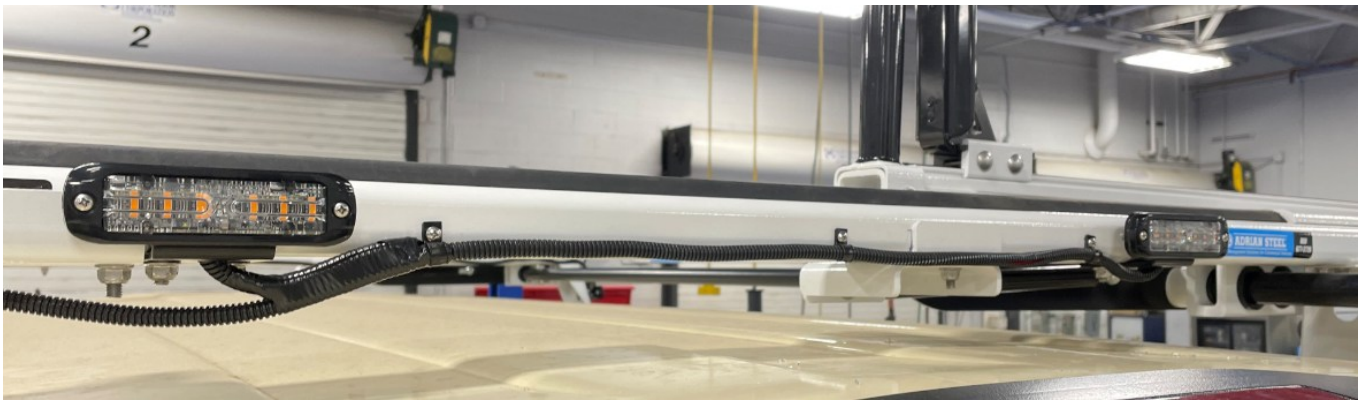

All Ladder Racks—Mounting And Roof Drilling

Use the ladder rack instructions to finish the ladder rack install. Mount the rack to the roof—or at least know exactly where it is going to mount. Determine the hole location that is needed for the wire pass through cable gland. This should be as close as possible to the rack foot on the drivers side, to the right of the foot. See the diagram below for approximate location. Each vehicle will be different, so be sure to check the inside of the van before drilling the hole.

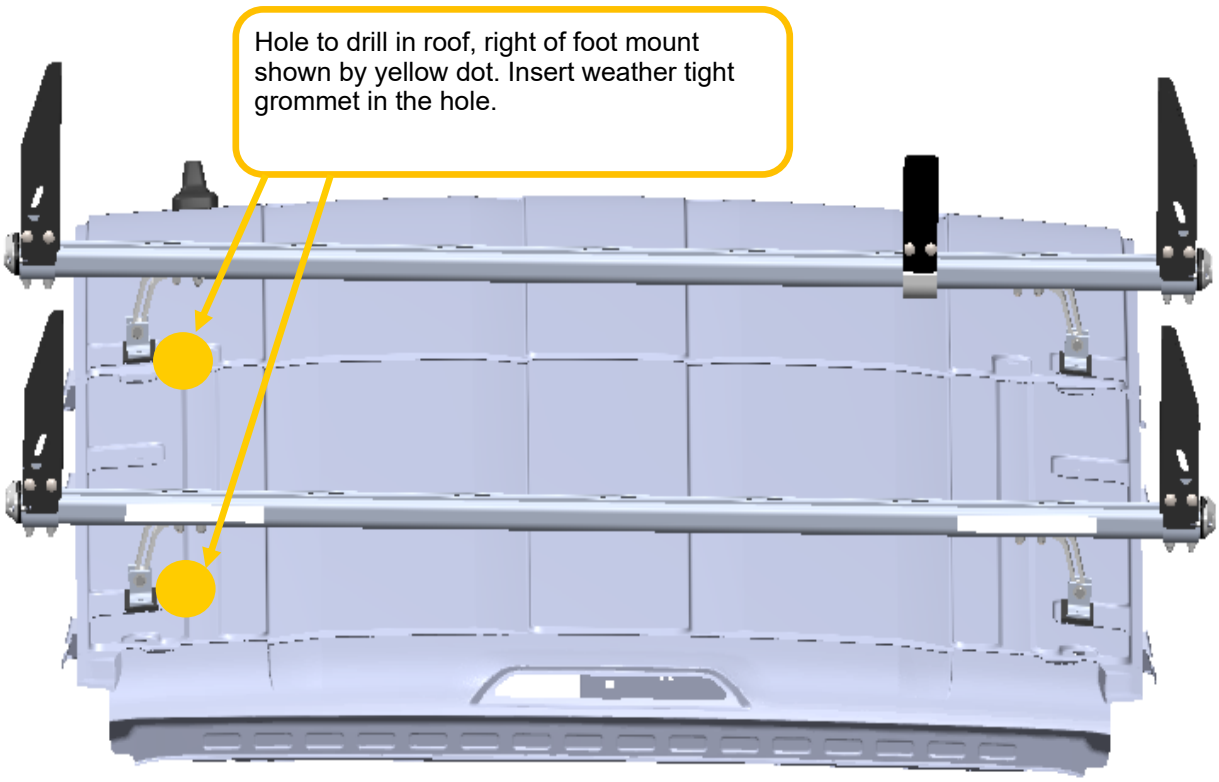

Drill a 7/8” hole in the roof. *Locate the fastener bag BAG66092, as you will be utilizing the cable gland 65314. You can ignore the cable gland in the kit 67622*. Insert the cable gland into the hole. Route the wire terminal end of the harness through the hole and silicone. Do this for both the front and rear cross bows. Picture below is an example of the Chevy Express roof.

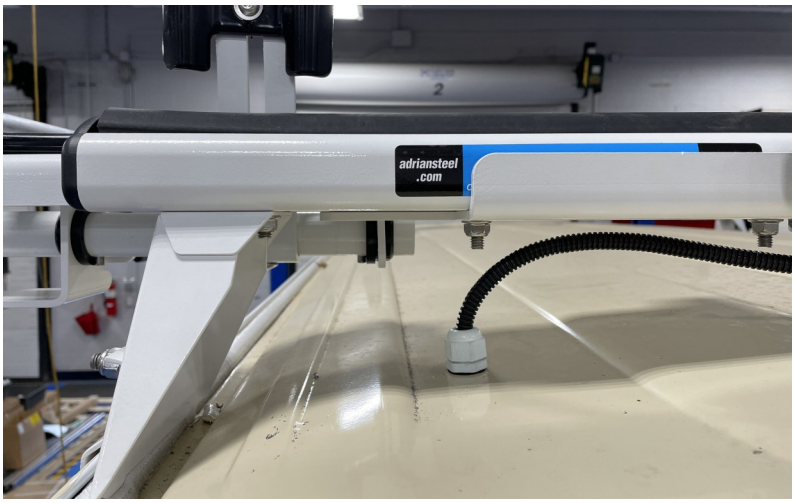

Terminal ends of the harness WITHOUT the connector



Locate the connector housing inside the light-bar/beacon box.

Note if it has a red insert inside the connector or not. Refer to picture for red insert inside the connector.



Insert the lightbar wire terminals into the connector. **See steps below:**

In these steps be very careful to place the terminals into the correct side of the connector.

Line the red wire terminal up with cavity #1 and the black wire terminal up with cavity #2.



Note the connector has a “1” and a “2” noted on the connector (circled in red). The red wire will be inserted into the #1 cavity of the connector. The black wire will be inserted into the #2 cavity on the connector.



Be sure to align the terminal prongs up with the inside of the connector pin outs.

Carefully insert the terminals into their designated section.

Also be sure the terminals snap into position. You should feel or hear a click when they are correctly inserted.

Pull on the wiring to be sure the connectors have been inserted completely.



If not already done:
Insert the red plastic piece into the top end of the connector. This will also click into place.

Do this for both the cross bow harnesses.

Now connect this connector/harness to the body harness that has been routed through the van already. Finish securing the harness to the vehicle.

Insert the fuse into the inline-fuse holder on the power harness. The install is now complete. Secure all wiring with zip ties. Re-attach all trim. Re-assure all pass through holes have been silicone. Double check the functionality of the lights and switches.





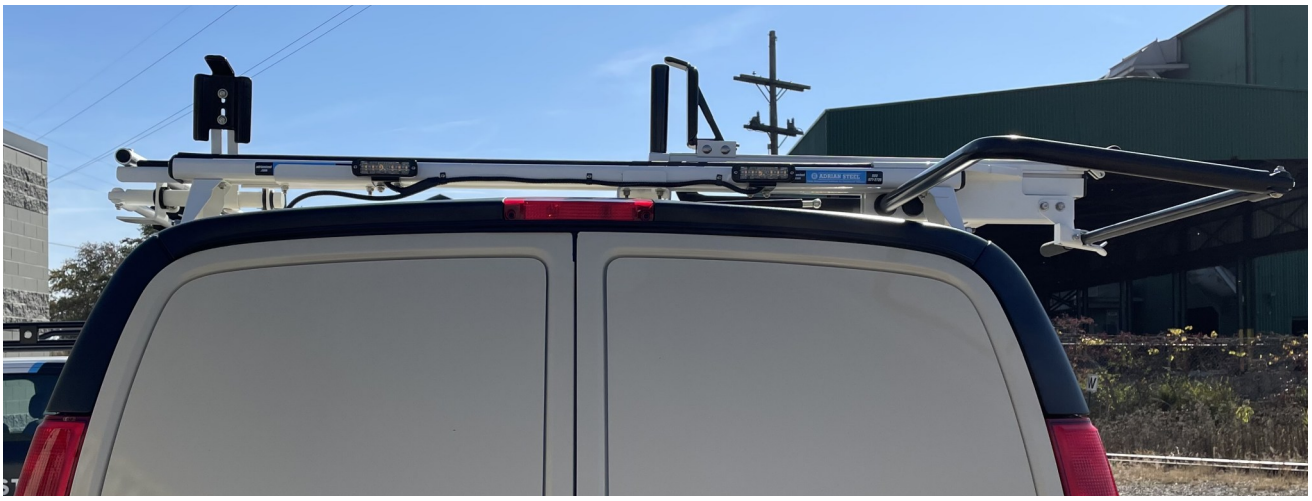

PART NUMBER
13905-0

ITEM DESCRIPTION: WIRE TIE, NYLON 40Lb, 8.5” BLACK



MANUFACTURER: WAYTEK, INC. or equivalent
MANUFACTURERS PART NUMBER: 21093M or 21093C

SPECIFICATIONS: STANDARD CABLE TIE
BLACK, NYLON
8-1/2” LONG
TENSILE STRENGTH: 40.0 LBS
21093M = 1,000 quanity
21093C = 100 quanity

SPECIAL NOTES: PART NUMBER IS BLACK.

SUPPLIED BY: THIS ITEM IS ADRIAN AVAILABLE!

PURCHASED PRODUCT DATA SHEET (PPDS)

THIS DRAWING/INFORMATION IS THE PROPERTY OF ADRIAN STEEL COMPANY AND IS NOT TO BE USED IN ANY MANNER THAT IS DETRIMENTAL TO THE INTEREST OF ADRIAN STEEL. COPYRIGHTS AND OR PATENTS THAT MAY BE THE PROPERTY OF APPLICABLE OWNERS MAY PROTECT INFORMATION AND/OR DRAWINGS OF SUPPLIED PRODUCTS.

ADRIAN STEEL
VAN AND PICKUP EQUIPMENT

906 JAMES STREET
ADRIAN, MI 49221
517-265-6194
WWW.ADRIANSTEEL.COM

⚠ CAUTION ⚠

WHEN INSTALLING EQUIPMENT IN OR ON VEHICLES CHECK FOR FUEL TANKS, FUEL LINES, CONTROL LINES AND ELECTRICAL WIRING BEFORE DRILLING! ALWAYS USE DRILL BITS WITH INTEGRAL STOPS WHENEVER POSSIBLE!

DRAWN BY	DATE DRAWN
MDG	10/26/2006
ECN NUMBER	ECN DATE
18021	11/13/2015
PART WEIGHT	REV. LEVEL
0.01 LBS.	D

PART NUMBER
13905-0

PART NUMBER
26618-0

ITEM DESCRIPTION: SILICONE, 1oz. TUBE



SPECIFICATIONS:
SU5005 RTV SILICONE
1oz. TUBE
CLEAR OR EQUIVILENT
SELF PIERCING CAP

SPECIAL NOTES:

SUPPLIED BY: THIS ITEM IS ADRIAN AVAILABLE!

PURCHASED PRODUCT DATA SHEET (PPDS)

THIS DRAWING/INFORMATION IS THE PROPERTY OF ADRIAN STEEL COMPANY AND IS NOT TO BE USED IN ANY MANNER THAT IS DETRIMENTAL TO THE INTEREST OF ADRIAN STEEL. COPYRIGHTS AND OR PATENTS THAT MAY BE THE PROPERTY OF APPLICABLE OWNERS MAY PROTECT INFORMATION AND/OR DRAWINGS OF SUPPLIED PRODUCTS.

ADRIAN STEEL
VAN AND PICKUP EQUIPMENT
906 JAMES STREET
ADRIAN, MI 49221
517-265-6194
WWW.ADRIANSTEEL.COM

⚠ CAUTION ⚠

WHEN INSTALLING EQUIPMENT IN OR ON VEHICLES CHECK FOR FUEL TANKS, FUEL LINES, CONTROL LINES AND ELECTRICAL WIRING BEFORE DRILLING! ALWAYS USE DRILL BITS WITH INTEGRAL STOPS WHENEVER POSSIBLE!

DRAWN BY	DATE DRAWN
JLC	7/21/2001
ECN NUMBER	ECN DATE
16551	7/22/2014
PART WEIGHT	REV. LEVEL
0.02 LBS.	C

PART NUMBER
26618-0

PART NUMBER
26618-0

ITEM DESCRIPTION: SILICONE, 1oz. TUBE



SPECIFICATIONS:
SU5005 RTV SILICONE
1oz. TUBE
CLEAR OR EQUIVILENT
SELF PIERCING CAP

SPECIAL NOTES:

SUPPLIED BY: THIS ITEM IS ADRIAN AVAILABLE!

PURCHASED PRODUCT DATA SHEET (PPDS)

THIS DRAWING/INFORMATION IS THE PROPERTY OF ADRIAN STEEL COMPANY AND IS NOT TO BE USED IN ANY MANNER THAT IS DETRIMENTAL TO THE INTEREST OF ADRIAN STEEL. COPYRIGHTS AND OR PATENTS THAT MAY BE THE PROPERTY OF APPLICABLE OWNERS MAY PROTECT INFORMATION AND/OR DRAWINGS OF SUPPLIED PRODUCTS.

ADRIAN STEEL
VAN AND PICKUP EQUIPMENT
906 JAMES STREET
ADRIAN, MI 49221
517-265-6194
WWW.ADRIANSTEEL.COM

⚠ CAUTION ⚠

WHEN INSTALLING EQUIPMENT IN OR ON VEHICLES CHECK FOR FUEL TANKS, FUEL LINES, CONTROL LINES AND ELECTRICAL WIRING BEFORE DRILLING! ALWAYS USE DRILL BITS WITH INTEGRAL STOPS WHENEVER POSSIBLE!

DRAWN BY	DATE DRAWN
JLC	7/21/2001
ECN NUMBER	ECN DATE
16551	7/22/2014
PART WEIGHT	REV. LEVEL
0.02 LBS.	C

PART NUMBER
26618-0

PART NUMBER **55073**

ITEM DESCRIPTION: STROBE SWITCH DECAL SET

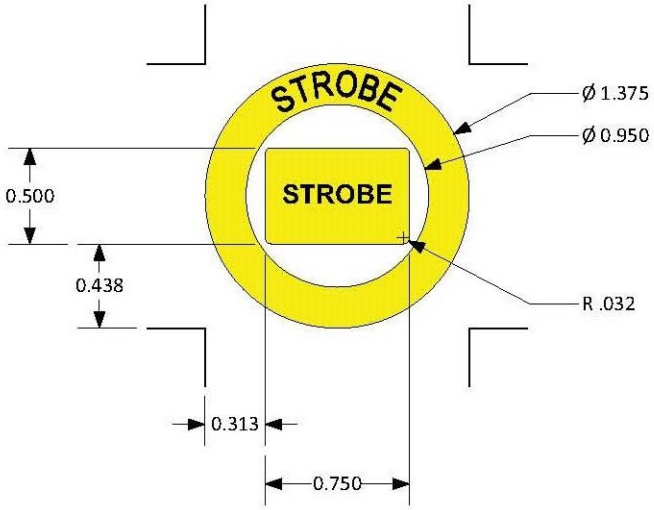

MANUFACTURER: VANNER
MANUFACTURERS PART NUMBER: TBD

SPECIFICATIONS: (1) Circular Yellow Decal (ID=0.950", OD=1.375") with "STROBE" in black letters
(1) Rectangular Yellow Decal (H=0.500", L=0.750") with "STROBE" in black letters

SPECIAL NOTES: For round rocker switch (OD=0.780") and Ford Transit Upfitter Switches.

SUPPLIED BY: THIS ITEM IS ADRIAN AVAILABLE!

PURCHASED PRODUCT DATA SHEET (PPDS)

THIS DRAWING/INFORMATION IS THE PROPERTY OF ADRIAN STEEL COMPANY AND IS NOT TO BE USED IN ANY MANNER THAT IS DETRIMENTAL TO THE INTEREST OF ADRIAN STEEL. COPYRIGHTS AND OR PATENTS THAT MAY BE THE PROPERTY OF APPLICABLE OWNERS MAY PROTECT INFORMATION AND/OR DRAWINGS OF SUPPLIED PRODUCTS.

ADRIAN STEEL
Cargo Management Solutions for Commercial Vehicles
906 JAMES STREET
ADRIAN, MI 49221
517-265-6194
WWW.ADRIANSTEEL.COM

⚠ CAUTION ⚠

WHEN INSTALLING EQUIPMENT IN OR ON VEHICLES CHECK FOR FUEL TANKS, FUEL LINES, CONTROL LINES AND ELECTRICAL WIRING BEFORE DRILLING! ALWAYS USE DRILL BITS WITH INTEGRAL STOPS WHENEVER POSSIBLE!

DRAWN BY	DATE DRAWN
RJB	**11/15/2017**
ECN NUMBER	**ECN DATE**
XXXX	**XXXXXX**
PART WEIGHT	**REV. LEVEL**
0.02 LBS.	**A**
PART NUMBER	
55073	

PART NUMBER
55073

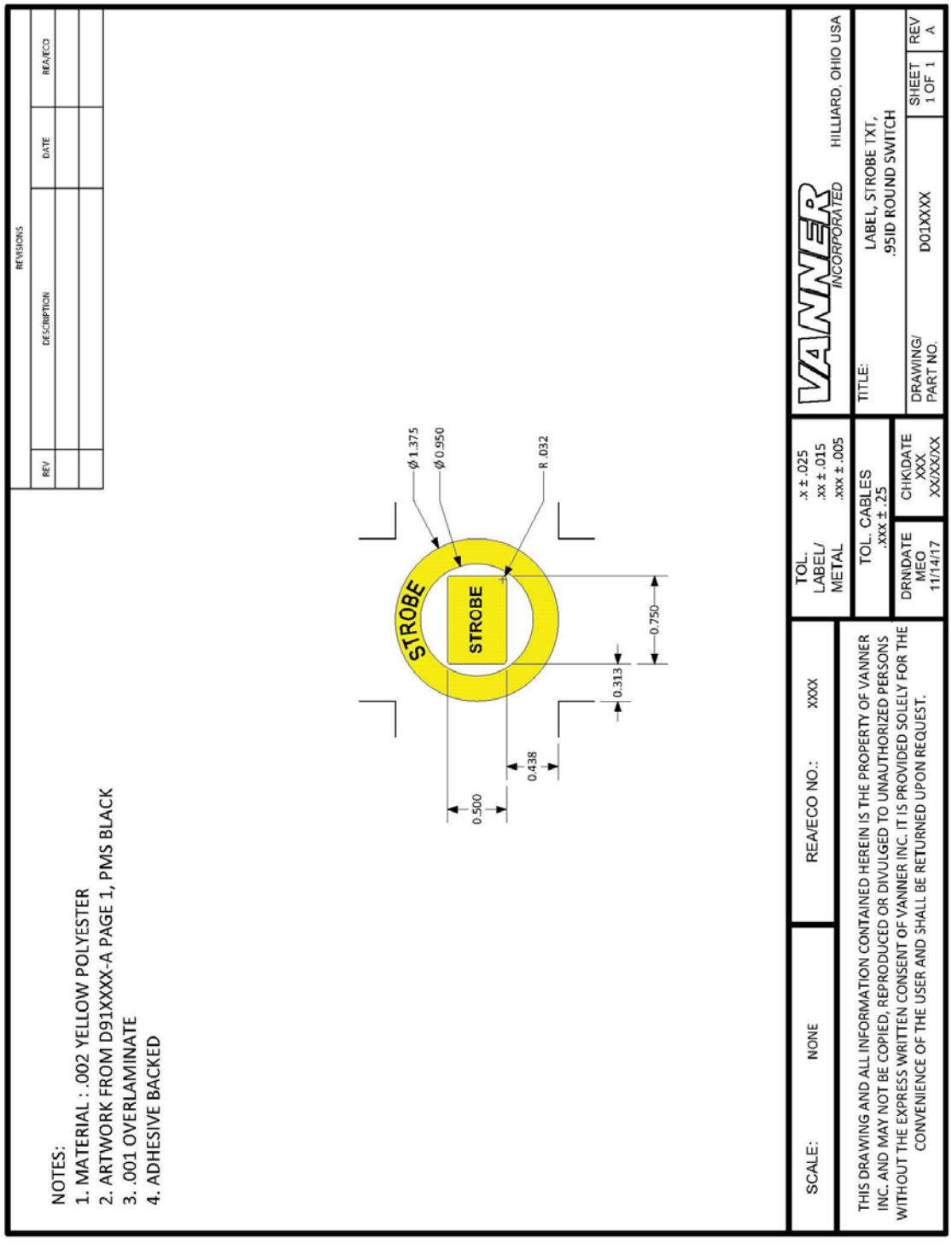

THIS DRAWING/INFORMATION IS THE PROPERTY OF ADRIAN STEEL COMPANY AND IS NOT TO BE USED IN ANY MANNER THAT IS DETRIMENTAL TO THE INTEREST OF ADRIAN STEEL. COPYRIGHTS AND OR PATENTS THAT MAY BE THE PROPERTY OF APPLICABLE OWNERS MAY PROTECT INFORMATION AND/OR DRAWINGS OF SUPPLIED PRODUCTS.

ADRIAN STEEL
Cargo Management Solutions for Commercial Vehicles
906 JAMES STREET
ADRIAN, MI 49221
517-265-6194
WWW.ADRIANSTEEL.COM

⚠ CAUTION ⚠

WHEN INSTALLING EQUIPMENT IN OR ON VEHICLES CHECK FOR FUEL TANKS, FUEL LINES, CONTROL LINES AND ELECTRICAL WIRING BEFORE DRILLING! ALWAYS USE DRILL BITS WITH INTEGRAL STOPS WHENEVER POSSIBLE!

DRAWN BY	DATE DRAWN
RJB	11/15/2017
ECN NUMBER	**ECN DATE**
XXXX	XXXXXXX
PART WEIGHT	**REV. LEVEL**
0.02 LBS.	A
PART NUMBER	
55073	

FINAL APPLICATION LAYOUT

IMPORTANT NOTE TO INSTALL CREWS:

LOC | QTY | Part # | Description | Size

Material: IJ39 | Lamination: 8518

1 | 1: 6039597.Strobe Switch-1.52" x 2.07"

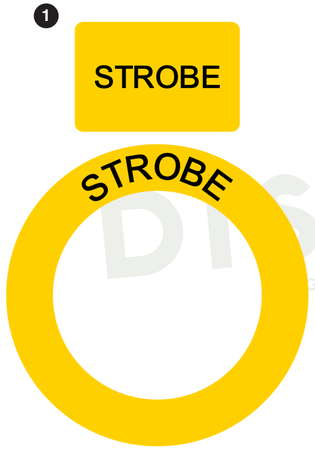

Note: Part will not be weeded, just cut.

Kit# 8001872 | Adrian Steel Part # 55073

06/01/2023 • JY

© 2022 DISTYLL Graphics Solutions. All rights reserved.

ASCO REV.1 6/14/2023

DISTYLL GRAPHIC SOLUTIONS FINAL DESIGN	CLIENT NAME: Adrian Steel		Switch Decals		O-ID: O15319-1
	DATE: 05/31/2023	DESIGNER: TRN			Rev #: XXXX
					Opt #: A

Please check information to confirm accurate vehicle specifications.

CLEANING INSTRUCTIONS All surfaces must be considered contaminated. Clean the vehicle surface immediately before applying the film. Dust and other contaminates can collect quickly on the surface and prevent the film from adhering properly. Even a freshly painted surface can collect dust before graphics can be applied.

For the best success with the films recommended for vehicle graphics, always apply the graphics when the air and vehicle surface are both above 60°F (16°C) and below 90°F (32°C) before beginning the installation.

Bill of Materials

Id	Description	Manufacturer	Part Number	Quantity
1	Red, 12 AWG, TXL, 19/25 Stranding	Prysmian	140682-91W	24 in
2	Black, 12 AWG, TXL, 19/25 Stranding	Prysmian	145823-91W	44 in
3	MATE-N-LOK Connector, 2pos, Receptacle	TE Connectivity	1-480699-0	1
4	MATE-N-LOK Contact, 10-12 AWG, Pin	TE Connectivity	350922-3	2
5	Heat Shrink Ring Terminal, 12-10 AWG, 3/8" Stud	Molex	19164-0068	2
6	ATO/ATC In-Line Fuse Holder, 12 AWG, 30A	Egis	901028	1
7	Splice, Undetermined Length		Generic Splice	1
8	Corrugated Loom, Split Nylon, .250" ID, Black w/ Gray Stripe	Drossbach	014NPBSG BLACK/GRAY	34 in
9	Corrugated Loom, Split Nylon, .350" ID, Black w/ Gray Stripe	Drossbach	038NPBSG0000XZS	21 in
10	Anti-Abrasion Wire Harness Tape, Black	Tesa	TS51036 1.	
11	Generic Heat Shrink Label		Label	1
12	Rubber Grommet, 1/2" ID, 13/16" Panel Hole	Waytek	24514	1
13	ATOF Blade Fuse, 15A, 32VDC, Blue	Littelfuse	0287015.PXCN	1

Coverings

Id	Assembly
[8]	
[9]	
[10]	

Notes

1. Engineering Equivalence Allowed
2. Lock tape loom to wires with Tesa 51036
3. Tape joint with Tesa 51036
4. Install grommet over loom 6" from C1
5. Install 15A ATO fuse in fuse holder

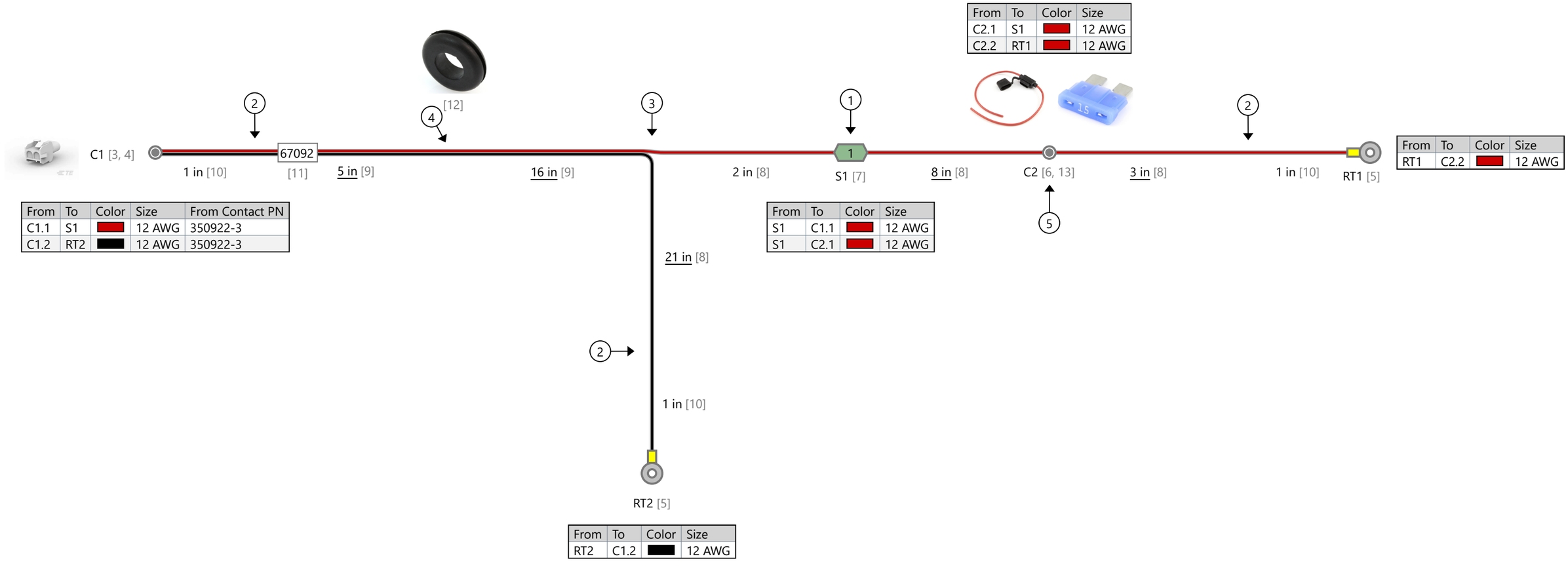

Revisions

Rev.	Date	Author	Description
A	10/28/2026	Andrew Oswalt	Initial Drawing

Initial ECN	25378	Drawn By	APO	Part Number 67092 Or PWR-HAR1	Segment ELE
Current ECN	25378	Weight (lb)	0.2	Description POWER HARNESS EXTERIOR 1	
ECN Description: RELEASE FOR PRODUCTION		Sheet	1 of 1	All dimensions in inches unless otherwise specified. Harness length tolerance = +/- 5%, max ≤ 5 in. Loom/tape to connector gap = 1 in. +/- 10% Wires in bundle length tolerance = +/- 5%, max ≤ 1 in. Terminal/contact wire strip length tolerances controlled by MFR.	
		Size	11" x 17"		

ADRIAN

This document contains confidential and proprietary information that cannot be reproduced or divulged, in whole or in part, without written authorization.

PURCHASED COMPONENT KEY FEATURES

DESCRIPTION OF REQUIREMENTS
DIMENSIONAL REQUIREMENTS (AS SHOWN ON DRAWING) **N/A**
LOAD/RATING REQUIREMENT **N/A**
MATERIAL REQUIREMENT **N/A**
PACKAGING REQUIREMENT **N/A**
OTHER REQUIREMENTS



THIS DRAWING IS THE PROPERTY OF ADRIAN STEEL COMPANY AND IS NOT TO BE USED IN ANY MANNER DETRIMENTAL TO THE INTERESTS OF ADRIAN STEEL COMPANY

PRINTED DOCUMENT IS UNCONTROLLED

TOLERANCES & INSPECTION

UNLESS OTHERWISE SPECIFIED

ALL BEND ANGLES ARE 90 DEGREES

ALL DIMENSIONS ARE IN INCHES.

REFERENCE DIMENSIONS (X.XXX) DO NOT REQUIRE INSPECTION

FEATURES	HOLES/SLOTS	ANGLES
0.0 = ± .125	0.0 = ± .062	0° = ± 2°
0.00 = ± .062	0.00 = ± .031	0.0° = ± 1°
0.000 = ± .031	0.000 = ± .015	

Material Thickness: per ASTM Std.
Weld Callouts per AWS

RELEASE & REVISIONS

INITIAL ECN: 25378

CURRENT ECN: 25378

ECN DESCRIPTION:

RELEASE FOR PRODUCTION

REVISED BY:

PURCHASED COMPONENT

REFERENCED SUPPLIER AND/OR MANUFACTURER
AAMP GLOBAL

REFERENCED SUPPLIER AND/OR MANUFACTURER PART NUMBER
SSW-HAR2 OR 67098

COLOR (ONLY LIST IF COLOR SPECIFIC)

COMODITY ITEM (Y/N) (YES = ALL DIMENSIONS AND NOTES ARE REFERANCE)
(NOTE: DIMENSIONS AND FEATURES MAY VARY FOR A COMODITY ITEM.)
NO

PART / PRODUCT IDENTIFICATION

ADRIAN STEEL®

ADRIAN STEEL COMPANY
906 JAMES STREET, ADRIAN, MI 49221

REVISION LEVEL **A**

MAT'L USED: **PURCHASED**

DESIGNED BY: **E.BURKE**

DESCRIPTION: **SWITCH HARNESS 2 EXTERIOR LIGHTING**

WEIGHT (Lbs.): **0.2**

SEGMENT CODE: **ELE**

PART NUMBER: **67098**

Coverings	
Id	Assembly
[12]	

Notes	
1	Lock Tape Loom with Tesa 51608
2	75mm between end of loom and Quick Connects



1

SSW-HAR1

[14]

C1 [7, 8]

75 mm [12]

From	To	Color	Gauge
C1.1	QC3		16 AWG
C1.2	S1		16 AWG

From	To	Color	Gauge
S1	C1.2		16 AWG
S1	C2.B		16 AWG
S1	C3.B		16 AWG
S1	C4.B		16 AWG
S1	QC1		16 AWG

From	To	Color	Gauge
S2	C2.A		16 AWG
S2	C3.A		16 AWG
S2	C4.A		16 AWG
S2	QC2		16 AWG

1

50 mm [12]

S1 [10, 11]

1

50 mm [12]

S2 [10, 11]

1

970 mm [12]

2

1

75 mm

QC1 [9]

QC2 [9]

QC3 [9]

From	To	Color	Gauge
QC1	S1		16 AWG
QC2	S2		16 AWG
QC3	C1.1		16 AWG

75 mm



C2 [4, 5, 6]

From	To	Color	Gauge
C2.A	S2		16 AWG
C2.B	S1		16 AWG

75 mm



C3 [4, 5, 6]

From	To	Color	Gauge
C3.A	S2		16 AWG
C3.B	S1		16 AWG

75 mm



C4 [4, 5, 6]

From	To	Color	Gauge
C4.A	S2		16 AWG
C4.B	S1		16 AWG



Loose Switch to be included with Harness

Revisions			
Rev.	Date	Author	Description
A	11/5/2021	Bennet Fisher	Initial Drawing

UNLESS OTHERWISE SPECIFIED

DIMENSIONS ARE IN MILLIMETERS [INCHES]
TOLERANCES: ±5MM

PROPRIETARY AND CONFIDENTIAL

THE INFORMATION CONTAINED IN THIS DRAWING IS THE SOLE PROPERTY OF AAMP GLOBAL. ANY REPRODUCTION IN PART OR AS A WHOLE WITHOUT THE WRITTEN PERMISSION OF AAMP GLOBAL IS PROHIBITED.

	Name	Date
Designed By	Bennet Fisher	11/5/2021
Engineering Approval	----	----
Manufacturing Approval	----	----
Revision Approval	----	----
Quality Assurance	----	----

AAMP
ADVANCING VEHICLE TECHNOLOGY

Part Number: SSW-HAR2

Revision: ----

Description:
Strobe Switch Harness - 3 Outputs

Sheet:
1 of 1

PURCHASED COMPONENT KEY FEATURES

DESCRIPTION OF REQUIREMENTS
DIMENSIONAL REQUIREMENTS (AS SHOWN ON DRAWING) **N/A**
LOAD/RATING REQUIREMENT **N/A**
MATERIAL REQUIREMENT **N/A**
PACKAGING REQUIREMENT **N/A**
OTHER REQUIREMENTS **PLUG AND PLAY BODY HARNESS 3 FOR LADDER RACK LIGHTING** **INCLUDES:** **2 CAPS FOR EXTERIOR CONNECTORS** **20 CABLE TIES** **5 WIRE TIE WITH CHRISTMAS TREES** **7 STICKEY BACKED CABLE TIE HOLDERS** **7 EDGE CLIP ZIP TIES** **7 NYLON PLASTIC LOOP CLAMPS** **7 PHILLIPS HEAD TEK SCREWS**

#1

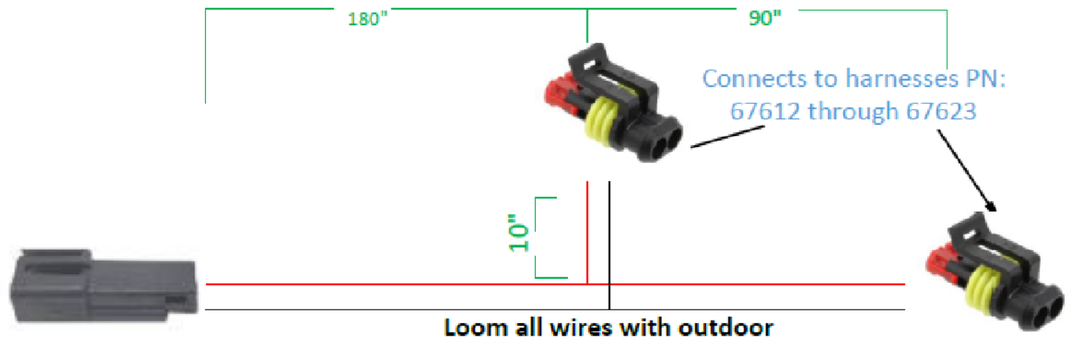

THIS DRAWING IS THE PROPERTY OF ADRIAN STEEL COMPANY AND IS NOT TO BE USED IN ANY MANNER DETRIMENTAL TO THE INTERESTS OF ADRIAN STEEL COMPANY

PRINTED DOCUMENT IS UNCONTROLLED

TOLERANCES & INSPECTION

UNLESS OTHERWISE SPECIFIED

ALL BEND ANGLES ARE 90 DEGREES

ALL DIMENSIONS ARE IN INCHES.

REFERENCE DIMENSIONS (X.XXX) DO NOT REQUIRE INSPECTION

FEATURES	HOLES/SLOTS	ANGLES
0.0 = ± .125	0.0 = ± .062	0° = ± 2°
0.00 = ± .062	0.00 = ± .031	0.0° = ± 1°
0.000 = ± .031	0.000 = ± .015	

Material Thickness: per ASTM Std.
Weld Callouts per AWS

RELEASE & REVISIONS

INITIAL ECN: **26041**

CURRENT ECN: **26041**

ECN DESCRIPTION:

RELEASE TO PRODUCTION

REVISED BY: **EMB**

PURCHASED COMPONENT

REFERENCED SUPPLIER AND/OR MANUFACTURER
AAMP

REFERENCED SUPPLIER AND/OR MANUFACTURER PART NUMBER
67607

COLOR (ONLY LIST IF COLOR SPECIFIC)

COMODITY ITEM (Y/N) (YES = ALL DIMENSIONS AND NOTES ARE REFERANCE)
(NOTE: DIMENSIONS AND FEATURES MAY VARY FOR A COMODITY ITEM.)
NO

PART / PRODUCT IDENTIFICATION

ADRIAN STEEL®

ADRIAN STEEL COMPANY
906 JAMES STREET, ADRIAN, MI 49221

REVISION LEVEL **A**

MAT'L USED: **PURCHASED**

DESIGNED BY: **E.BURKE**

DESCRIPTION: **BODY HARN 3 EXT P&P**

WEIGHT (Lbs.): **0.1**

SEGMENT CODE: **ELE**

PART NUMBER: **67607**

Bill of Materials

Id	Type	Part Number	Quantity
1	Wire	16 AWG Red GXL	7215 mm
2	Wire	16 AWG Black GXL	7165 mm
3	Corrugated Tubing	0.25" Nylon Split Wall	7115 mm
4	Edge Clip Cable Tie	156-00539	7
5	Fastener	90415A330	7
6	Cable Clamp		7
7	Cable Tie Mount		7
8	Cable Tie with Mount	156-00157	5
9	Cable Tie		20

Coverings

Id	Assembly
[3]	

Notes

1. Lock Tape Loom with Tesa 51036
2. Lock Tape Loom with Tesa 51036 on both side of wire breakout
3. Plug C4 into C2; Plug C5 into C3
4. C4 & C5 Cavities are sealed

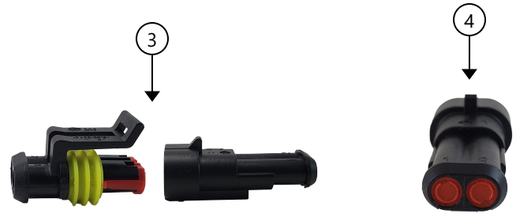

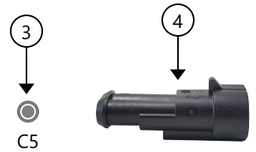



From	To	Color	Gauge
C3.1	S1		16 AWG
C3.2	S2		16 AWG

From	To	Color	Gauge
S1	C1.A		16 AWG
S1	C2.1		16 AWG
S1	C3.1		16 AWG
S2	C1.B		16 AWG
S2	C2.2		16 AWG
S2	C3.2		16 AWG



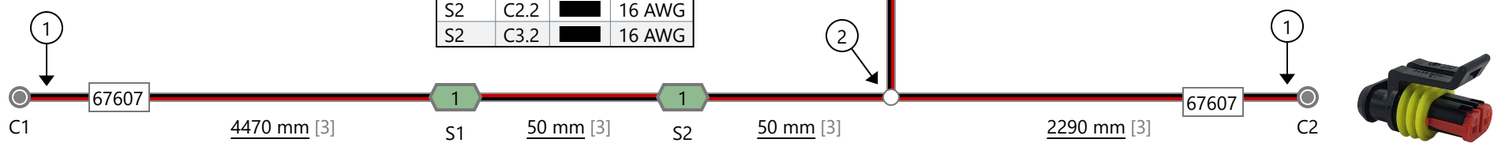

From	To	Color	Gauge
C1.A	S1		16 AWG
C1.B	S2		16 AWG

From	To	Color	Gauge
C2.1	S1		16 AWG
C2.2	S2		16 AWG

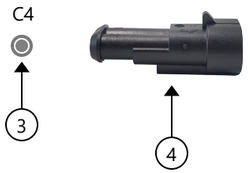



[4]



[5]



[6]



[7]



[8]

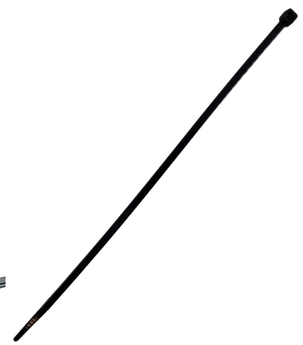

[9]

Revisions

Rev.	Date	Author	Description
	5/9/2022	Bennet Fisher	Initial Drawing
	7/14/2022	Bennet Fisher	Updated Wire Lengths to Connector C2 and C3
A	12/15/2022	Bennet Fisher	Updated Wire Lengths to Connector C2 and C3; Added loom for C2; Added Connector "Caps" with Seals; Added Second Harness Label

UNLESS OTHERWISE SPECIFIED
DIMENSIONS ARE IN MILLIMETERS [INCHES]
TOLERANCES: ±5MM

PROPRIETARY AND CONFIDENTIAL

THE INFORMATION CONTAINED IN THIS DRAWING IS THE SOLE PROPERTY OF AAMP GLOBAL. ANY REPRODUCTION IN PART OR AS A WHOLE WITHOUT THE WRITTEN PERMISSION OF AAMP GLOBAL IS PROHIBITED.

	Name	Date
Designed By	Bennet Fisher	05/09/2022
Engineering Approval		
Manufacturing Approval		
Revision Approval		
Quality Assurance		

AAMP
ADVANCING VEHICLE TECHNOLOGY

Part Number: 67607_ | Revision: A
Description: Strobe Extension Harness | Sheet: 1

PURCHASED COMPONENT KEY FEATURES

DESCRIPTION OF REQUIREMENTS
DIMENSIONAL REQUIREMENTS (AS SHOWN ON DRAWING) **N/A**
LOAD/RATING REQUIREMENT **N/A**
MATERIAL REQUIREMENT **N/A**
PACKAGING REQUIREMENT **N/A**
OTHER REQUIREMENTS **PLUG AND PLAY HARNESS FOR LADDER RACKS** **2 STROBES, 1 ON EACH END OF 68" RACK** **INCLUDES:** **10 CABLE TIES** **1 CABLE GLAND** **1 UN-CONNECTED TE282080-1 IN BAG**

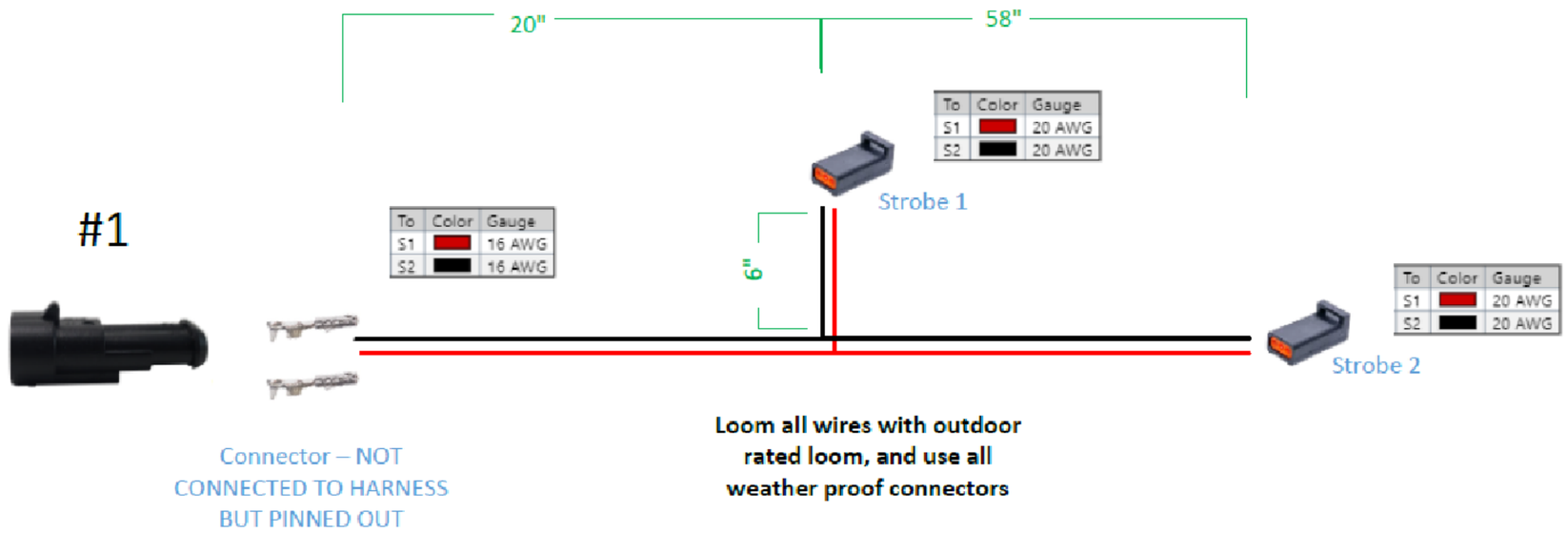

THIS DRAWING IS THE PROPERTY OF ADRIAN STEEL COMPANY AND IS NOT TO BE USED IN ANY MANNER DETRIMENTAL TO THE INTERESTS OF ADRIAN STEEL COMPANY

PRINTED DOCUMENT IS UNCONTROLLED

TOLERANCES & INSPECTION

UNLESS OTHERWISE SPECIFIED

ALL BEND ANGLES ARE 90 DEGREES

ALL DIMENSIONS ARE IN INCHES.

REFERENCE DIMENSIONS (X.XXX) DO NOT REQUIRE INSPECTION

FEATURES	HOLES/SLOTS	ANGLES
0.0 = ± .125	0.0 = ± .062	0° = ± 2°
0.00 = ± .062	0.00 = ± .031	0.0° = ± 1°
0.000 = ± .031	0.000 = ± .015	

Material Thickness: per ASTM Std.
Weld Callouts per AWS

RELEASE & REVISIONS

INITIAL ECN: **26041**

CURRENT ECN: **26041**

ECN DESCRIPTION:

RELEASE TO PRODUCTION

REVISED BY: **EMB**

PURCHASED COMPONENT

REFERENCED SUPPLIER AND/OR MANUFACTURER
AAMP

REFERENCED SUPPLIER AND/OR MANUFACTURER PART NUMBER
67615

COLOR (ONLY LIST IF COLOR SPECIFIC)

COMODITY ITEM (Y/N) (YES = ALL DIMENSIONS AND NOTES ARE REFERANCE)
(NOTE: DIMENSIONS AND FEATURES MAY VARY FOR A COMODITY ITEM.)
NO

PART / PRODUCT IDENTIFICATION

ADRIAN STEEL®

ADRIAN STEEL COMPANY
906 JAMES STREET, ADRIAN, MI 49221

REVISION LEVEL **A**

MAT'L USED: **PURCHASED**

DESIGNED BY: **E.BURKE**

DESCRIPTION: **STROBE HARN FOR 68" RACK**

WEIGHT (Lbs.): **0.1**

SEGMENT CODE: **ELE**

PART NUMBER: **67615**

PURCHASED COMPONENT KEY FEATURES

DESCRIPTION OF REQUIREMENTS
DIMENSIONAL REQUIREMENTS (AS SHOWN ON DRAWING) **N/A**
LOAD/RATING REQUIREMENT **N/A**
MATERIAL REQUIREMENT **N/A**
PACKAGING REQUIREMENT **N/A**
OTHER REQUIREMENTS **ECCO STROBE LIGHT: ED3801** **WITH EXTERIOR PLUG AND PLAY CONNECTOR**





THIS DRAWING IS THE PROPERTY OF ADRIAN STEEL COMPANY AND IS NOT TO BE USED IN ANY MANNER DETRIMENTAL TO THE INTERESTS OF ADRIAN STEEL COMPANY

PRINTED DOCUMENT IS UNCONTROLLED

TOLERANCES & INSPECTION

UNLESS OTHERWISE SPECIFIED

ALL BEND ANGLES ARE 90 DEGREES

ALL DIMENSIONS ARE IN INCHES.

REFERENCE DIMENSIONS (X.XXX) DO NOT REQUIRE INSPECTION

FEATURES	HOLES/SLOTS	ANGLES
0.0 = ± .125	0.0 = ± .062	0° = ± 2°
0.00 = ± .062	0.00 = ± .031	0.0° = ± 1°
0.000 = ± .031	0.000 = ± .015	

Material Thickness: per ASTM Std.
Weld Callouts per AWS

RELEASE & REVISIONS

INITIAL ECN: **25921**

CURRENT ECN: **25921**

ECN DESCRIPTION:

RELEASE TO PRODUCTION

REVISED BY: **N/A**

PURCHASED COMPONENT

REFERENCED SUPPLIER AND/OR MANUFACTURER
ECCO

REFERENCED SUPPLIER AND/OR MANUFACTURER PART NUMBER
ED3801A-ADR

COLOR (ONLY LIST IF COLOR SPECIFIC)
AMBER LED/CLEAR LENS

COMODITY ITEM (Y/N) (YES = ALL DIMENSIONS AND NOTES ARE REFERANCE)
(NOTE: DIMENSIONS AND FEATURES MAY VARY FOR A COMODITY ITEM.)
NO

PART / PRODUCT IDENTIFICATION

ADRIAN STEEL®

ADRIAN STEEL COMPANY
906 JAMES STREET, ADRIAN, MI 49221

REVISION LEVEL **A**

MAT'L USED: **PURCHASED**

DESIGNED BY: **EMB**

DESCRIPTION: **ECCO STROBE ED3801A W/CON**

WEIGHT (Lbs.): **0.5**

SEGMENT CODE: **EST**

PART NUMBER: **67686**