ADRIAN STEEL
Cargo Management Solutions for Commercial Vehicles

TANK RACK, 2-30LB VERTICAL

PRODUCT WEIGHT

25.5 LBS

WIDTH X DEPTH X HEIGHT

13" X 11" X 42"

CAPACITY

2-30LB REFRIGERANT TANKS

COLOR

GRAY OR BLACK

CATALOG NUMBER

230VTR
230VTRB

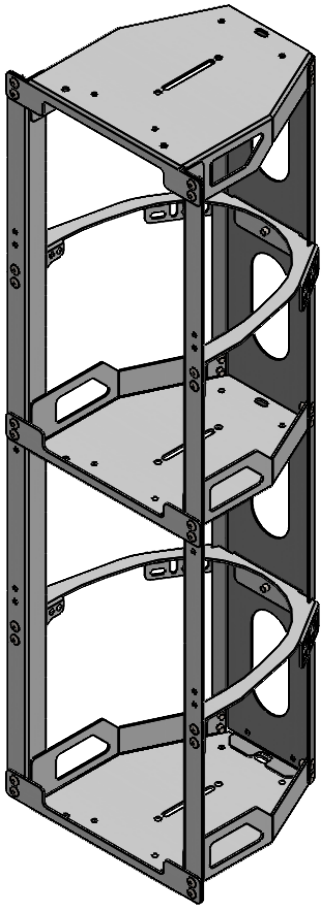

PRODUCT FEATURES

THIS TANK RACK IS DESIGNED TO CARRY 2-30LB REFRIGERANT RECOVERY TANKS.

THIS PRODUCT IS NOT VEHICLE SPECIFIC, THE KIT HAS FASTNERS INCLUDED FOR ATTACHING TO THE VEHICLE AND TO SHELFVING END PANELS.

TANK RACK STRAPS MUST BE USED AT ALL TIMES.

THIS TANK RACK CAN BE STACKED WITH OTHER SINGLE VTR TANK RACKS,AS WELL AS ANGLED "TR" TANK RACKS.

SOME DRILLING MAY BE REQUIRED DEPENDING ON THE APPLICATION.

SEE PAGE 2 FOR APPLICATION NOTES, ACCESSORIES AND OTHER PRODUCTS THAT WORK WITH THIS UNIT.

ADRIAN STEEL
Cargo Management Solutions for Commercial Vehicles

TANK RACK, 2-30LB VERTICAL

CATALOG NUMBER **230VTR**

PRODUCT APPLICATION

THIS TANK RACK MOUNTS IN COMMERCIAL VEHICLES TO HOLD 2 30LB REFRIGERANT RECOVERY TANKS

ACCESSORIES THAT WILL WORK WITH THIS PRODUCT

CATALOG NUMBER	*DESCRIPTION (smart)*
130VTR	TANK RACK,1-30LB VERTICAL TANK RACK
150VTR	TANK RACK,1-50LB VERTICAL TANK RACK
230VTR	TANK RACK,2-30LB VERTICAL TANK RACK
250VTR	TANK RACK,2-50LB VERTICAL TANK RACK
130TR	TANK RACK, 1-30LB TANKS
150TR	TANK RACK, 1-50LB TANKS
230TR	TANK RACK,2-30LB TANKS
250TR	TANK RACK,2-50LB TANKS
TRSHELF30	TANK RACK 30LB, SHELF
TR4SHELF30	TANK RACK 30LB, 4" SHELF

The information contained in this document is the sole property of ADRIAN STEEL COMPANY. ADRIAN STEEL COMPANY retains the right to modify and/or change the product of its design at any time with prior notification.

INSTR. NUMBER : **INSVTR**	PG: **1**	REV: **C**

PART NUMBER • **130VTR**
• **150VTR**
230VTR
250VTR

PART DESC. • TANK RACK, 1-30LB TANK
• TANK RACK, 1-50LB TANK
TANK RACK, 2-30LB TANK
TANK RACK, 2-50LB TANK

ITEM NO.	PART NUMBER	DESCRIPTION	QTY.
1	130VTR	TANK RACK,1-30LB VERTICAL	1
2	150VTR	TANK RACK,1-50LB VERTICAL	1
3	230VTR	230VTR TANK RACK	1
4	250VTR	250VTR VERTICAL TANK RACK	1

- PART NUMBERS ARE PAINTED GRAY
- FOR BLACK TANK RACKS, ADD "-B" TO PART NUMBER

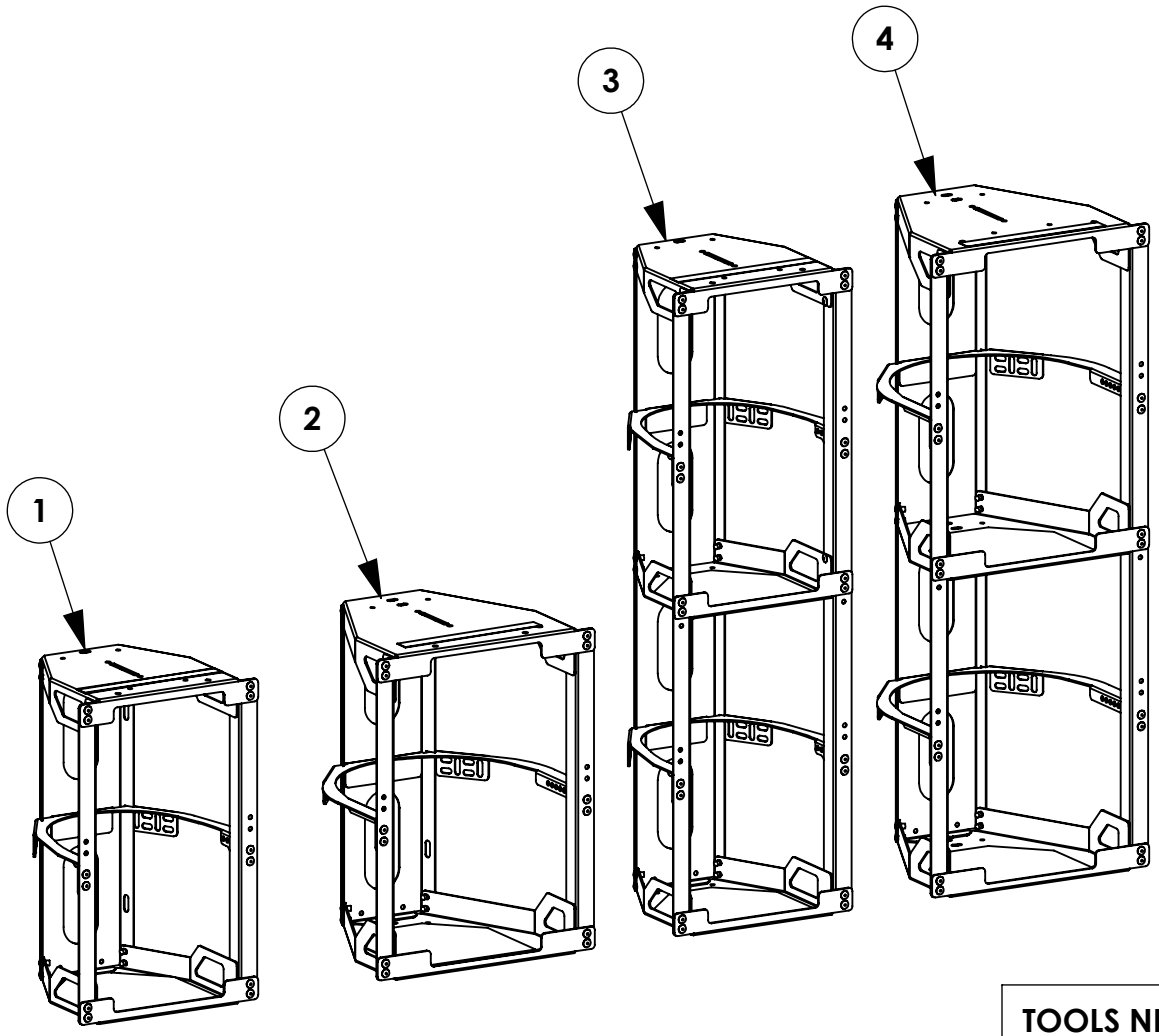

TOOLS NEEDED:

- 1/2" SOCKET
- 7/16" SOCKET
- 1/2" DRILL BIT
- DRILL
- PLUSNUT TOOL

BEST PRACTICES

GET TO KNOW THE VEHICLE - AT THE BEGINNING OF ANY INSTALLATION, CHECK THE LOCATION OF THE FUEL TANK, FUEL LINES, BRAKE LINES, HIGH VOLTAGE BATTERIES AND WIRING HARNESSES TO AVOID INJURY OR PROPERTY DAMAGE FROM TOOL CONTACT.

SEAL ALL EXTERIOR HOLES - ALL INSTALLATION HOLES SHOULD BE SEALED WITH BUTYL TAPE OR SILICON TO PREVENT WATER AND EXHAUST GASES FROM ENTERING THE VEHICLE.

CONTROL DRILL DEPTH - TO AVOID DAMAGE TO THE VEHICLE, USE A DRILL STOP OR CLEARED STEP BIT WHEN DRILLING INSTALLATION HOLES.

ALWAYS ADD PRIMER - WHEN ADDING INSTALLATION HOLES BE SURE TO USE A SELF-ETCHING PRIMER TO PREVENT CORROSION, FASTENER FAILURE AND INJURY.

MOUNTING POINTS MUST HAVE METAL-TO-METAL CONTACT - USE PROVIDED MOUNTING SPACERS TO ACCOMMODATE FOR VEHICLE FEATURES, CARPET OR SUBFLOORS.

PROVIDE CLEARANCE FOR SPACERS - IF THE INSTALLATION VEHICLE CONTAINS A CARPET OR SUBFLOOR, USE A 1-3/16" DIAMETER CARPET CUTTER (P/N: 31183-0) AT ALL MOUNTING LOCATIONS TO OPEN UP ROOM FOR SPACERS.

CHECK SPACER ORIENTATION - BE SURE THAT THE INDENT IN THE SPACER COVERS THE PLUSNUT HEAD; THIS ENSURES THE MOST METAL-TO-METAL CONTACT AND REDUCES VIBRATION.

PLUSNUT INSTALLATION - A PLUSNUT GUN IS RECOMMENDED FOR PLUSNUT INSTALLATION FOR ITS PRODUCTION SPEED. HOWEVER, A PLUSNUT SETTING TOOL CAN ALSO BE USED (P/N: 22200-0).

THRU-BOLT CLEARANCE - WHEN USING A THRU-BOLT AT ANY MOUNTING LOCATION, BE SURE THAT YOUR HOLE HAS 1/16" CLEARANCE.

BEST PRACTICE: ORGANIZE ALL FASTENERS & VERIFY THAT ALL ARE ACCOUNTED FOR

FASTENERS USED

BAG REFERENCE: **BAGVTR**

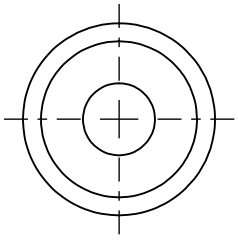

03927-1
SPACER, FLR,
1010, 11/35, ZP
QTY: 3

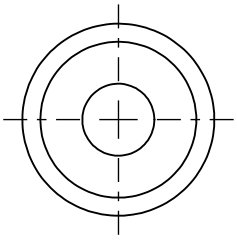

03927-2
SPACER, FLR
1010, 11/16 ZP
QTY: 3

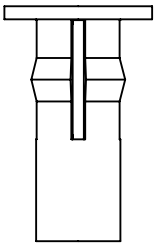

FAS0091
PLUSNUT, 5/16
QTY: 4

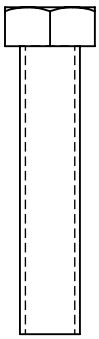

FAS0092
SCREW, HEX HD,
5/16-18 x 1.50
Zn PLATE, G8
QTY: 4

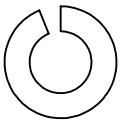

FAS0098
WASHER, LOCK, SPLIT,
5/16, ZINC PLATE
QTY: 5

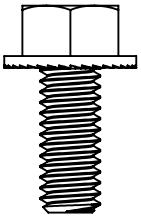

FAS0438
SCREW, HFLNG,
5/16-18 X .75, ZP
QTY: 2

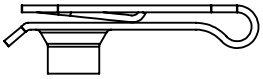

FAS0994
U-NUT
1/4-20
QTY: 3

FAS0440
NIT, HEX NLK FLG,
5/16-18, ZP
QTY: 4

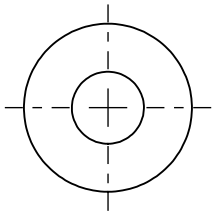

FAS0086
WASHER, FLAT USS,
5/16, ZP
QTY: 8

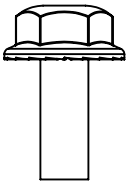

FAS0018
SCREW, HFLNG
1/4-20 X .62
QTY: 3

INTENTIONALLY LEFT BLANK

BEST PRACTICE: ORGANIZE ALL HARDWARE PCS. & VERIFY THAT ALL ARE ACCOUNTED FOR

HARDWARE USED

HDW KIT REFERENCE: **HDWVTR230-250**

ITEM NO.	PART NUMBER	DESCRIPTION	QTY.
1	CRT06987-A	CARTON HARDWARE FOR KD	1
2	MB118	MOUNT ANGLE 1-1/2" / GALV	1
3	MB120	MOUNTING STRAP	1
4	65409	Trim,Pinchweld Blue 10"	6
5	INSVTR	Install Instructions, Tank Racks	1
6	BAGVTR	BAG FOR VERTICAL TANK RACKS	1
7	64335	DECAL, WARNING, TR	1
8	65406	STRAP 25", TANK RACK	2
9	46768-G	WING BRACKET, UPPER, TRANSIT	1

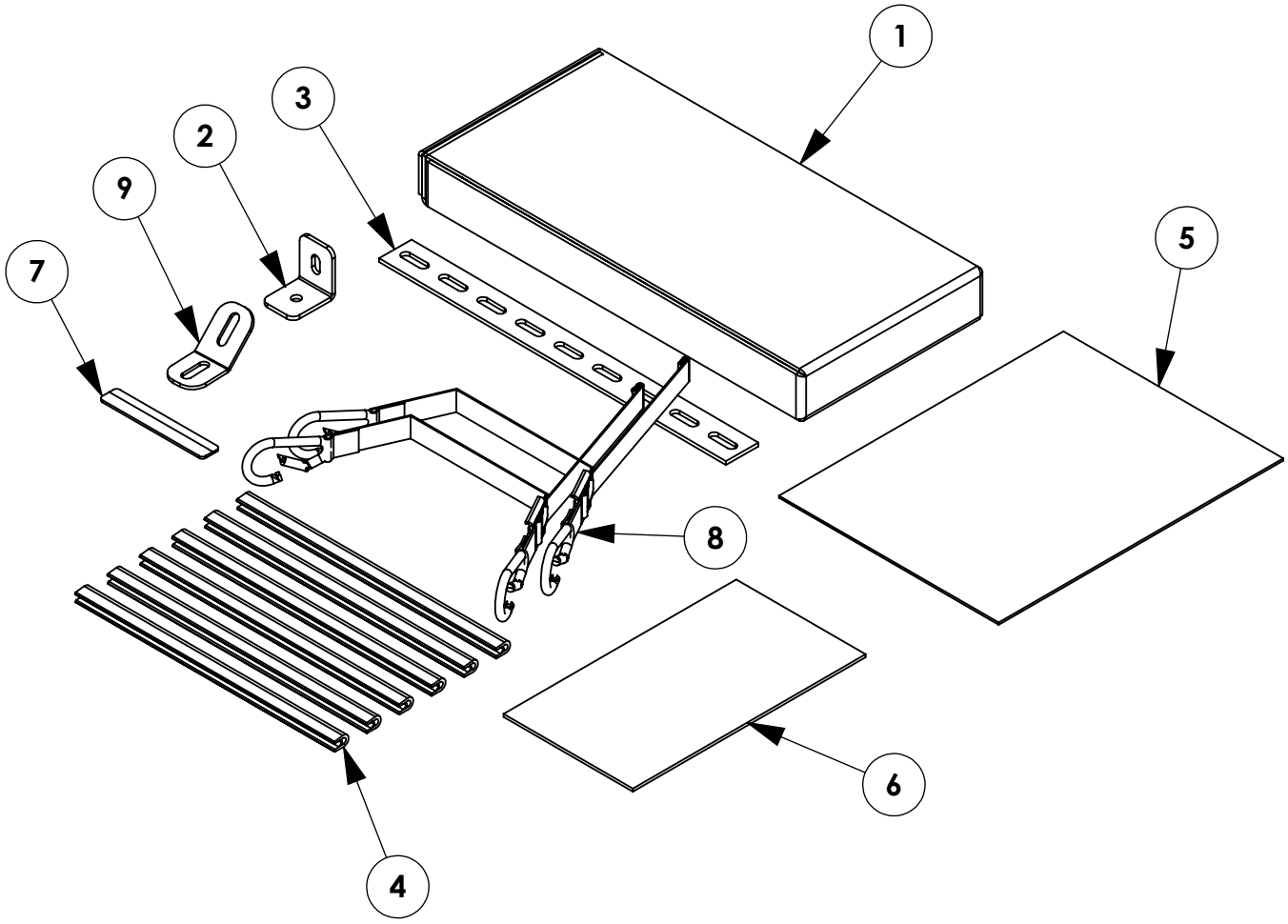

INTENTIONALLY LEFT BLANK

MOUNTING TANK RACK TO END PANEL

Step 1.1
PLACE TANK RACK AGAINST END PANEL, LOCATE MOUNTING HOLES ON END PANEL. MARK HOLE LOCATION ON THE FLOOR DRILL HOLES FOR PLUSNUTS

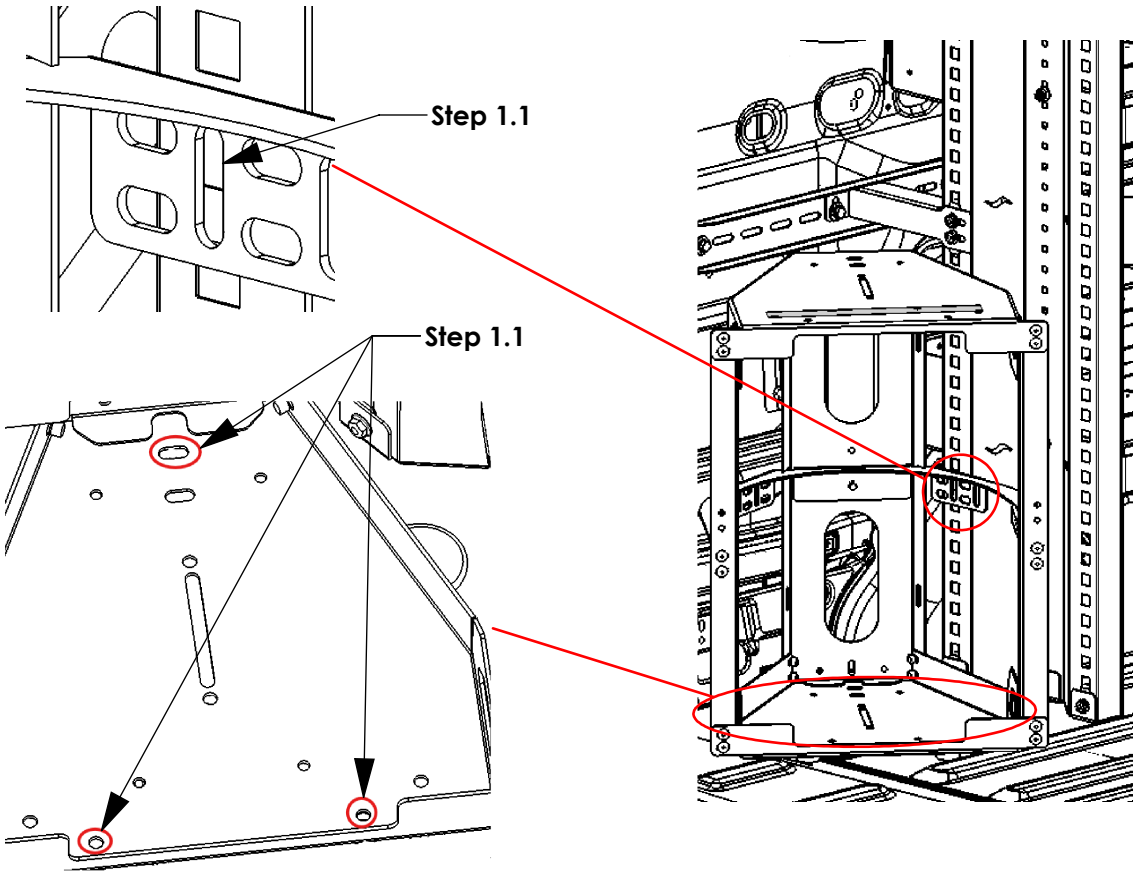

Step 2.1
AFTER MARKING LOCATION PUSH FAS0994 INTO END PANEL SLOT

Step 2.2
AFTER DRILLING 1/2" HOLE PLACE (3) FAS0091 INTO HOLE, USE PLUSNUT TOOL TO INSTALL PLUSNUT

1/2" DRILL BIT DRILL
PLUSNUT DRILL

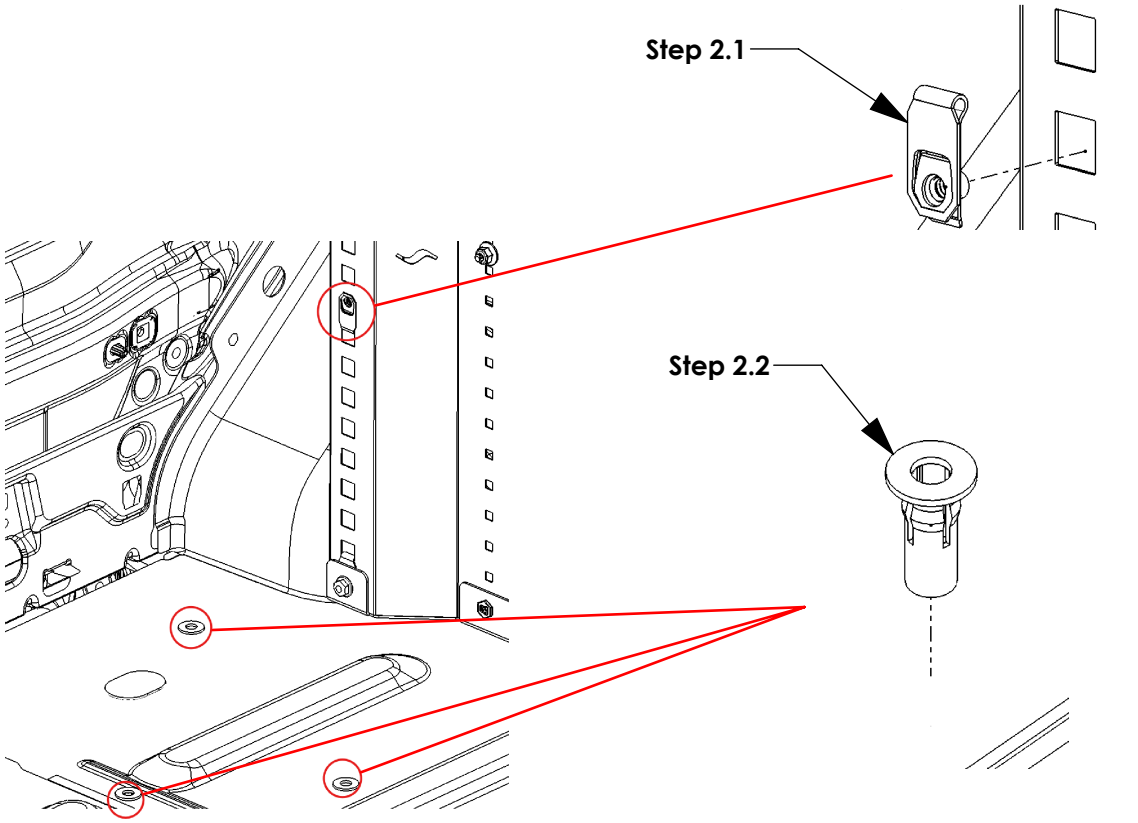

MOUNTING TANK RACK TO END PANEL

Step 3.1
PLACE SPACERS OVER PLUSNUTS AS REQUIRED ON LOCATION AND VEHICLE FLOOR RIB HEIGHT

Step 3.2
PLACE TANK RACK OVER SPACERS, AND ALIGN WITH END PANEL SLOTS

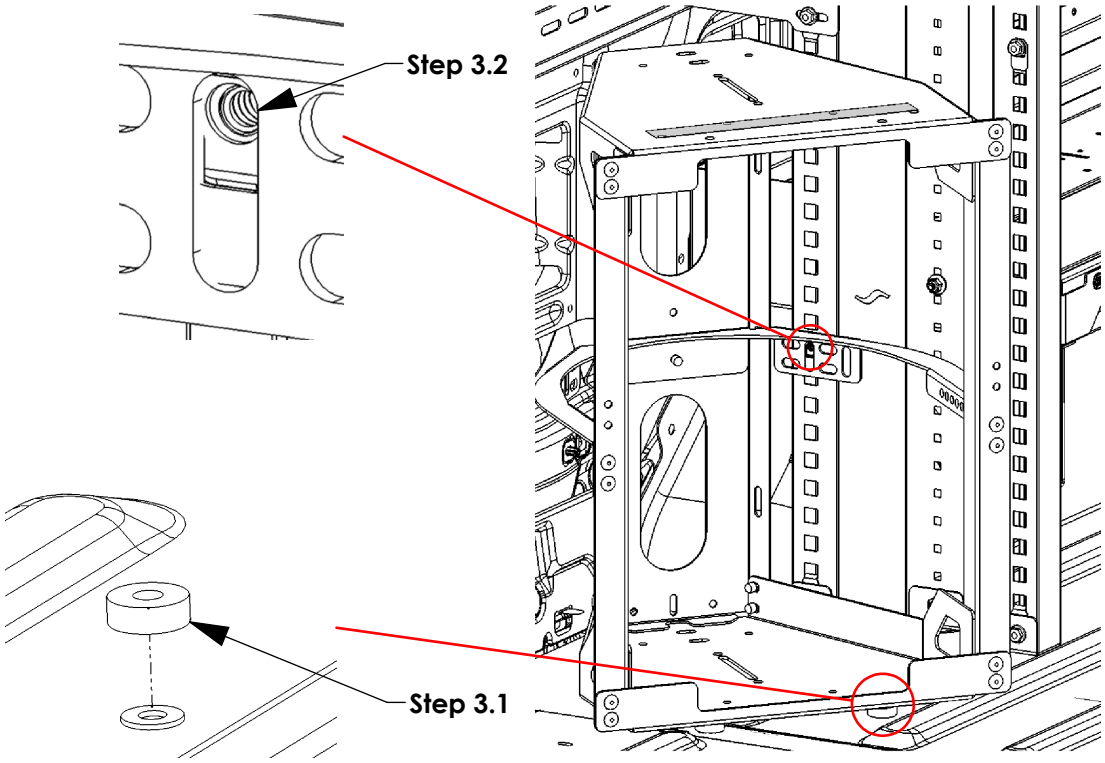

Step 4.1
<u>FULLY TIGHTEN</u>
FAS0018 TO SECURE THE TANK RACK TO THE END PANEL

7/16" SOCKET DRILL

Step 4.2
<u>FULLY TIGHTEN</u>
PLACE (3) FAS0092, (3) FAS0098, & (3) FAS0086 THROUGH HOLE TO PLUSNUTS

1/2"SOCKET DRILL

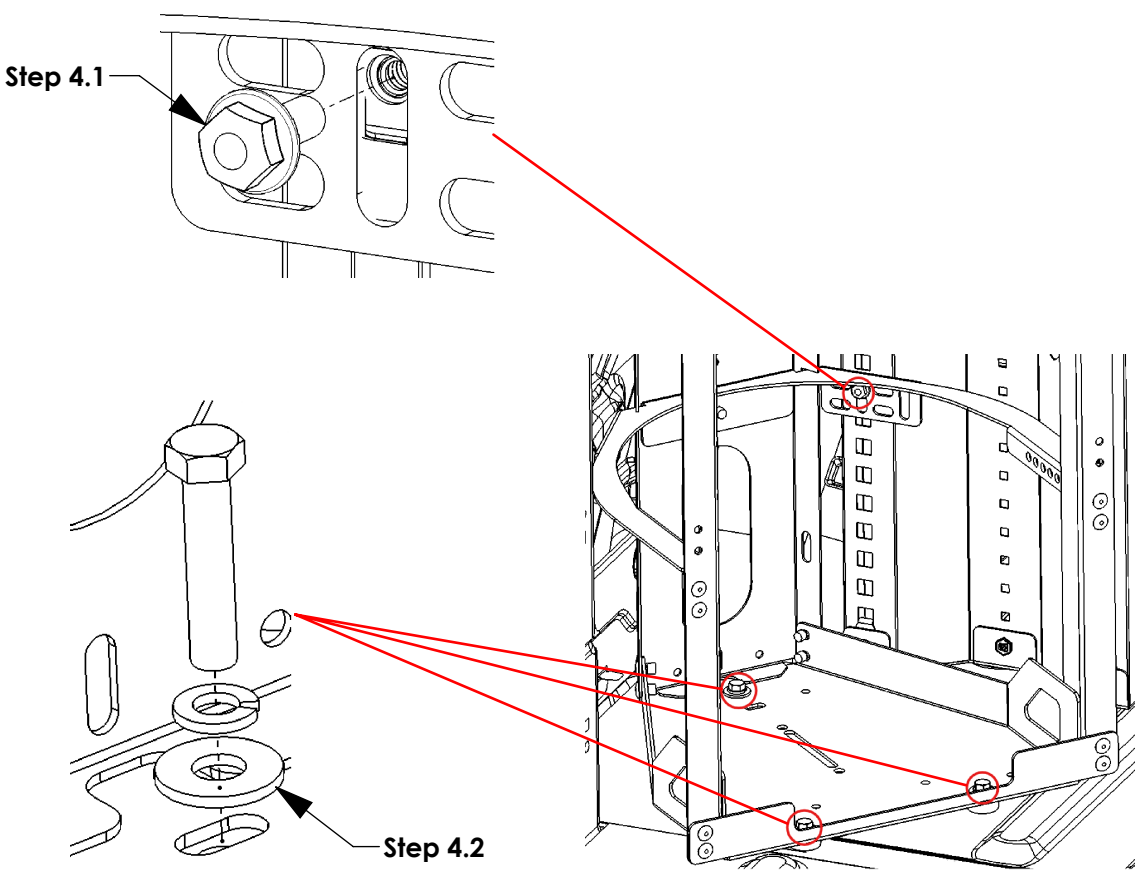

MOUNTING TANK RACK TO END PANEL

Step 5.1
LOOSELY TIGHTEN (1) FAS0438 & (1) FAS0440, TO HOLD MB120 AND MB118 TOGETHER.

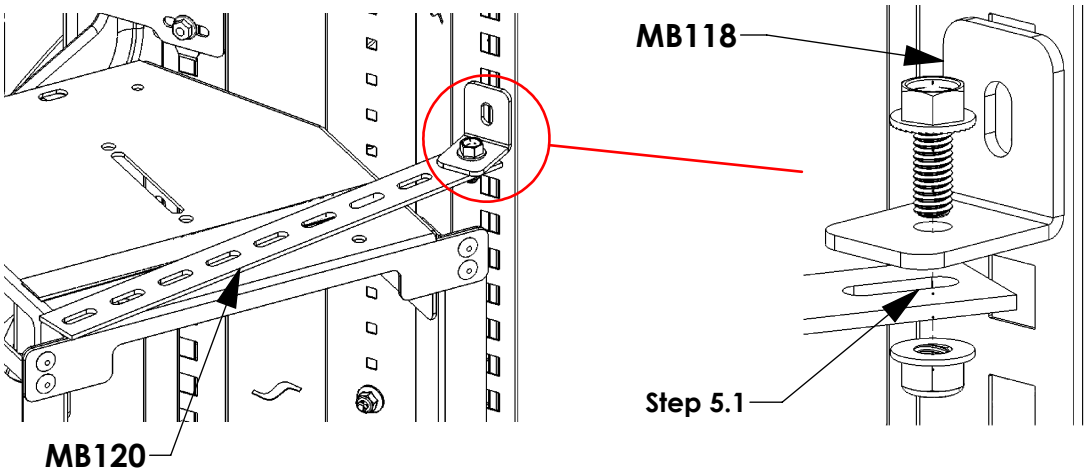

Step 5.2
PLACE MB120 & MB118 ON TOP OF THE TANK RACK, LOCATE HOLE ON TOP PLATE AND MARK SLOTS ON END PANEL

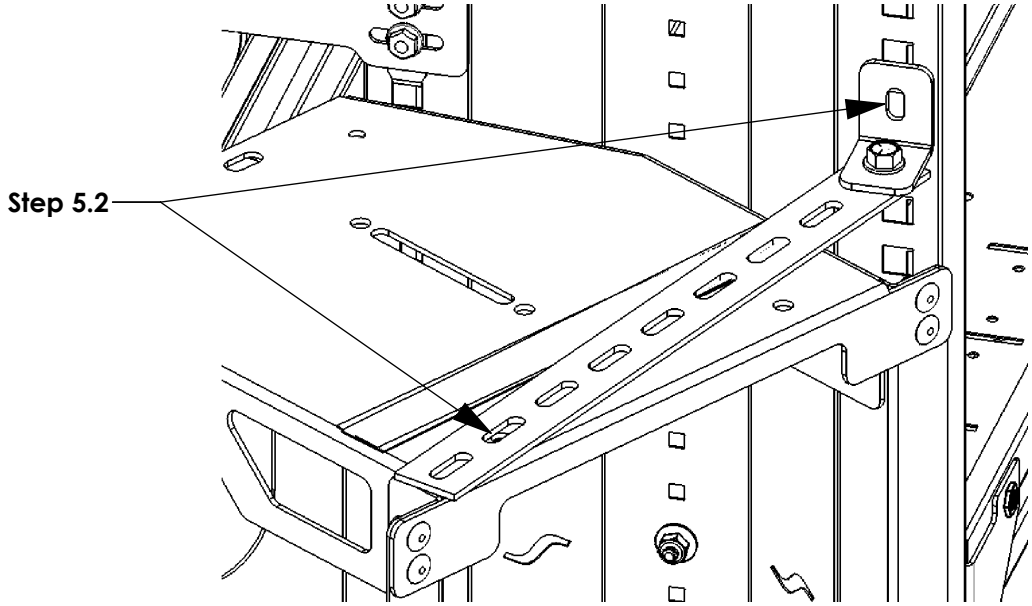

Step 5.3
INSERT FAS0994 INTO MARKED END PANEL SLOT

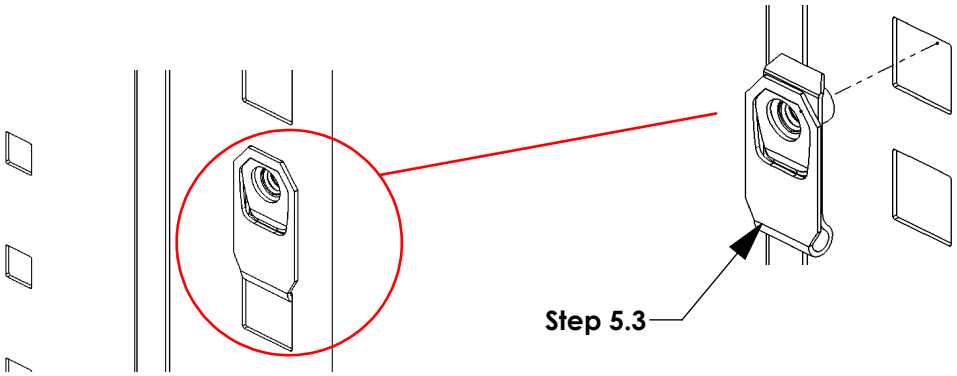

MOUNTING TANK RACK TO END PANEL

Step 5.4
PLACE MB120 & MB118 BACK TO TOP PLATE ON TANK RACK, LOOSELY TIGHTEN FAS0438 & FAS0440 IN HOLES.

FULLY TIGHTEN AFTER STEP 5.5

1/2" SOCKET
DRILL

Step 5.5
PLACE MB118 AGINST END PANEL, FULLY TIGHTEN FAS0018, REATTACH FAS0438 AND FAS0440 FULLY TIGHTEN.

7/16" SOCKET
1/2" SOCKET
DRILL

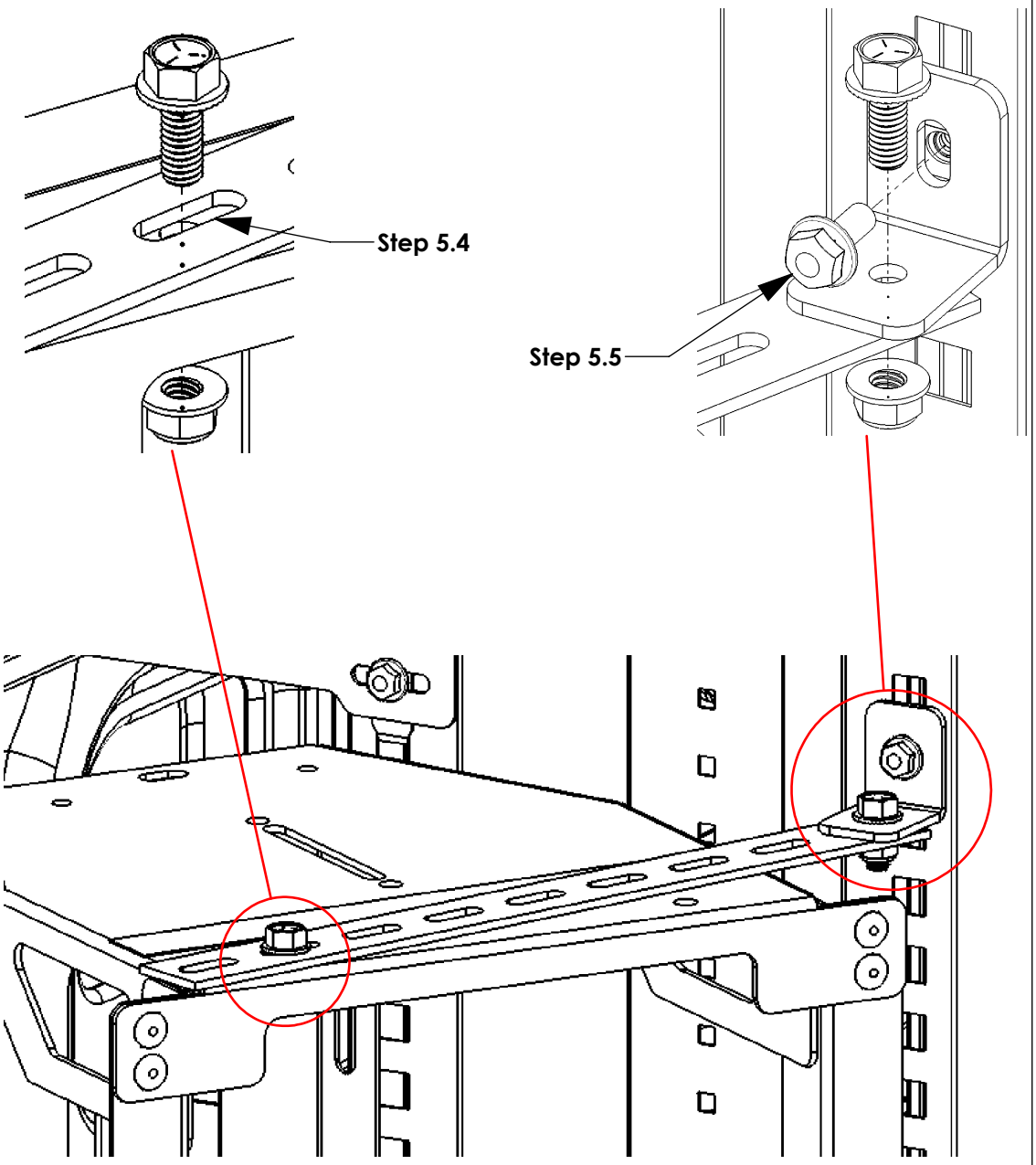

MOUNTING TANK RACK TO D-PILLAR

Step 6.1
PLACE TANK RACK AGAINST D-PILLAR AT AN ANGLE. AFTER FINDING LOCATION MARK HOLE LOCATION ON FLOOR TO BE DRILLED

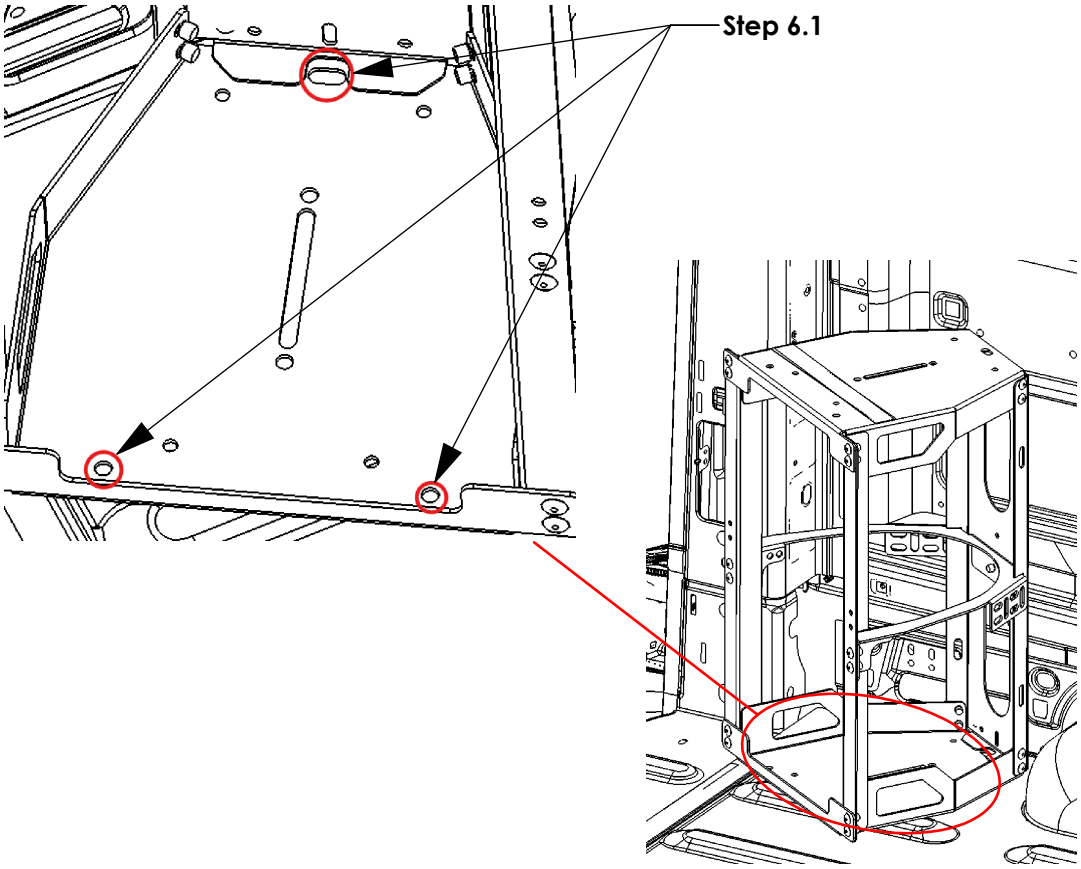

Step 7.1
REPEAT STEPS 2.2, 3.2 & 4.2 TO MOUNT TANK RACK TO FLOOR

1/2" SOCKET
1/2" DRILL BIT
DRILL
PLUSNUT DRILL

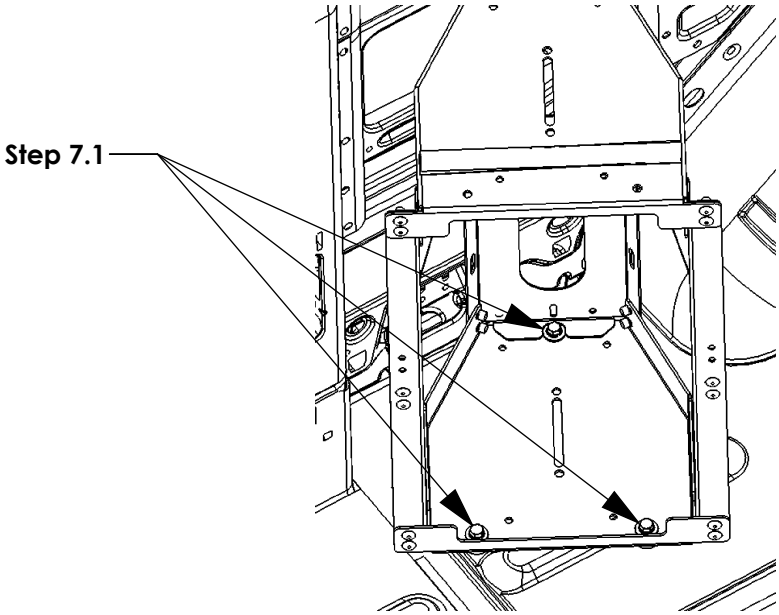

MOUNTING TANK RACK TO D-PILLAR

Step 8.1
REPEAT STEP 5.4 TO MOUNT MB120 TO TOP PLATE

1/2" SOCKET DRILL

Step 8.2
REPEAT STEP 5.1 TO COMBINE MB120 & MB118.

PLACE AGAINST D-PILLAR TO MARK HOLE TO DRILL 1/2" HOLE

1/2" SOCKET DRILL

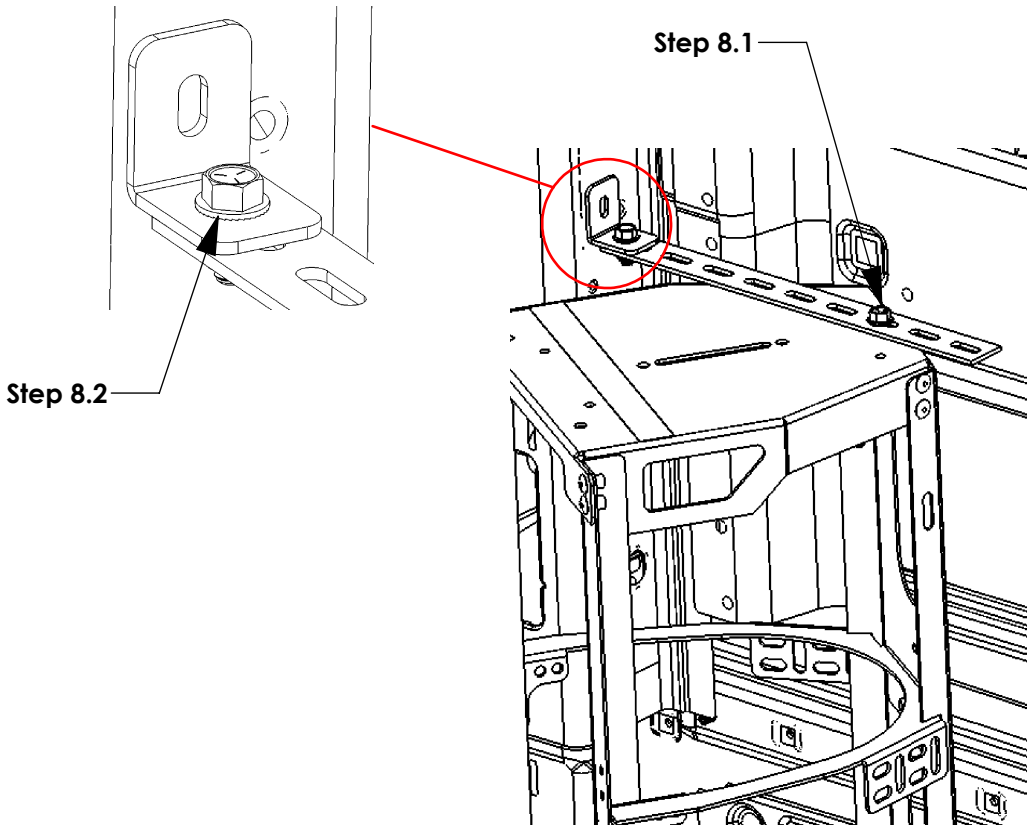

Step 8.3
USE PLUSNUT TOOL TO PLACE FAS0091 INTO DRILL HOLE

1/2" DRILL BIT DRILL
PLUSNUT TOOL

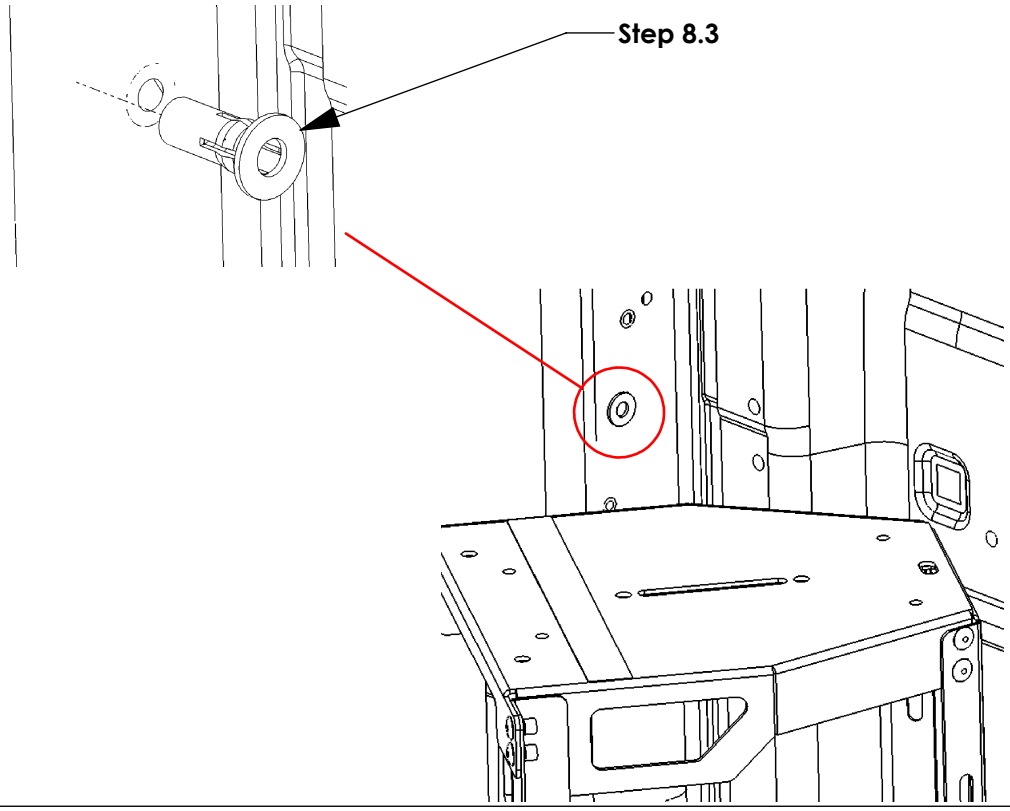

MOUNTING TANK RACK TO D-PILLAR

Step 8.4
REPEAT STEP 5.4.

Step 8.5
REPOSITION MB118 AGAINST THE PLUSNUT ALONG THE D-PILLAR,
FULLY TIGHTEN FAS0438,
REATTACH FAS0438 AND FAS0440 FULLY TIGHTEN.

1/2" SOCKET
DRILL

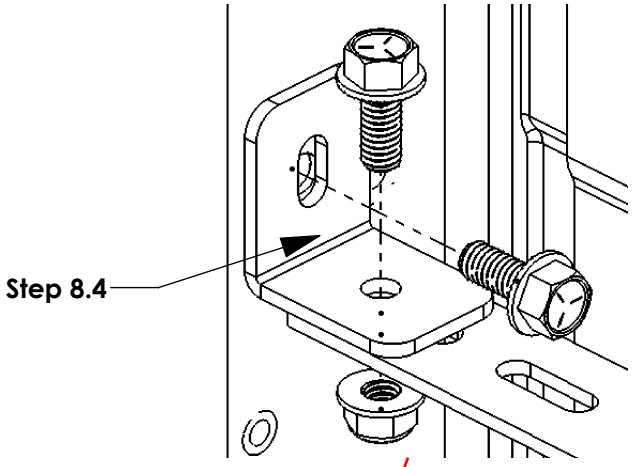

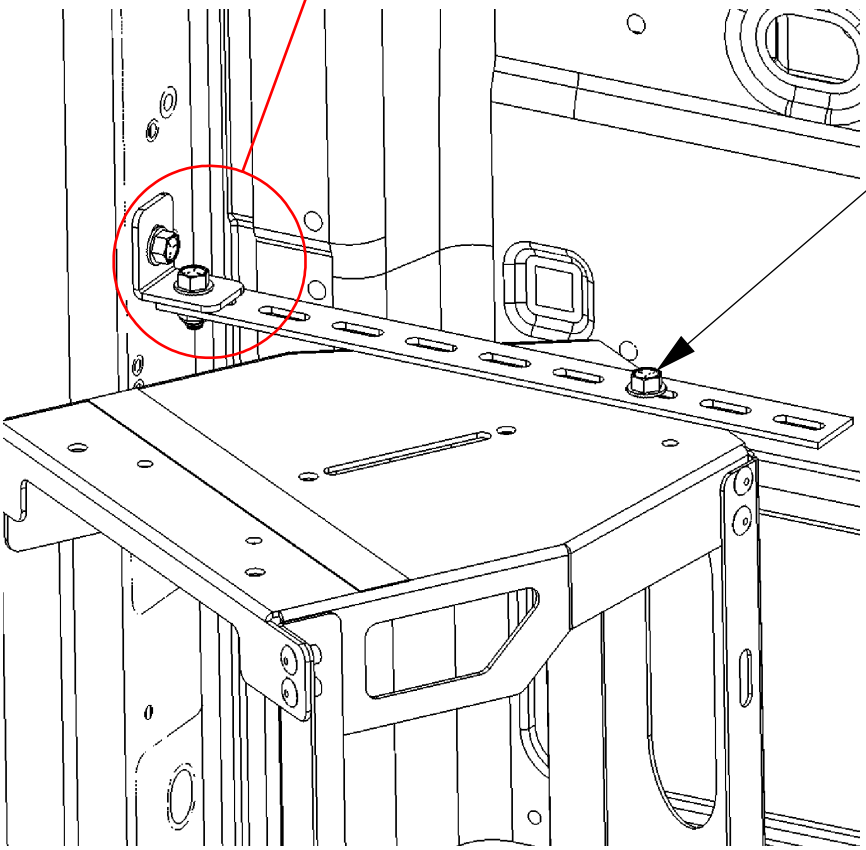

FINAL STEP TO MOUNT TANKS

BEFORE PLACING TANK INTO RACK INSTALL PINCH WELD AROUND EDGE OF SUPPORT PLATE

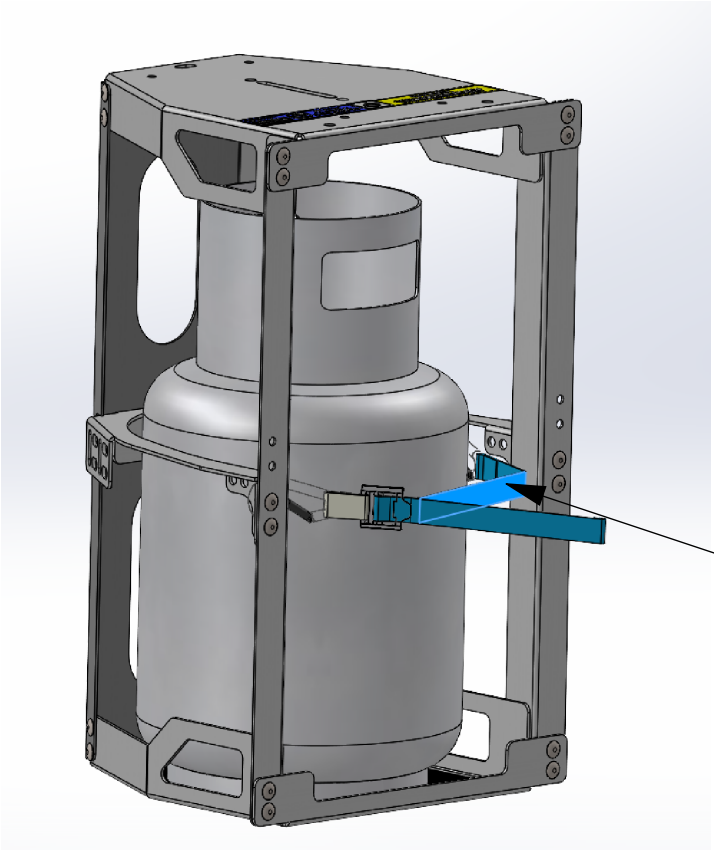

AFTER TANK RACK HAS BEEN MOUNTED IN PLACE, PLACE TANK INTO RACK AND USE 65406 STRAP TO SECURE TANK IN PLACE.

VERY IMPORTANT TO STRAP TANKS ONTO TANK RACKS

**IF USING 30LB TANK WITH 150VTR,
FASTEN ADDITIONAL 65406 STRAP WITH BOTTOM SLOTS TO SECURE**

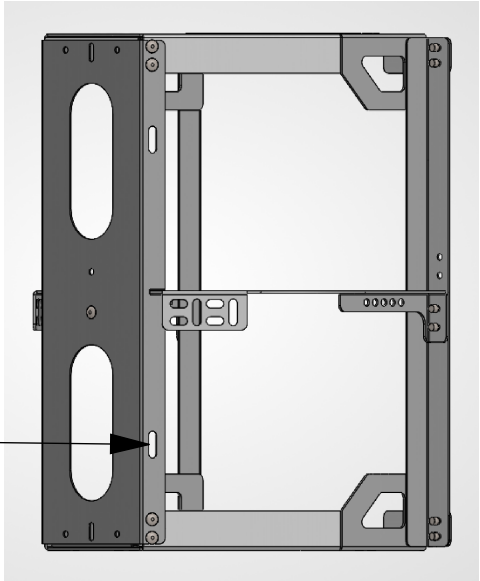

STACKING TANK RACKS

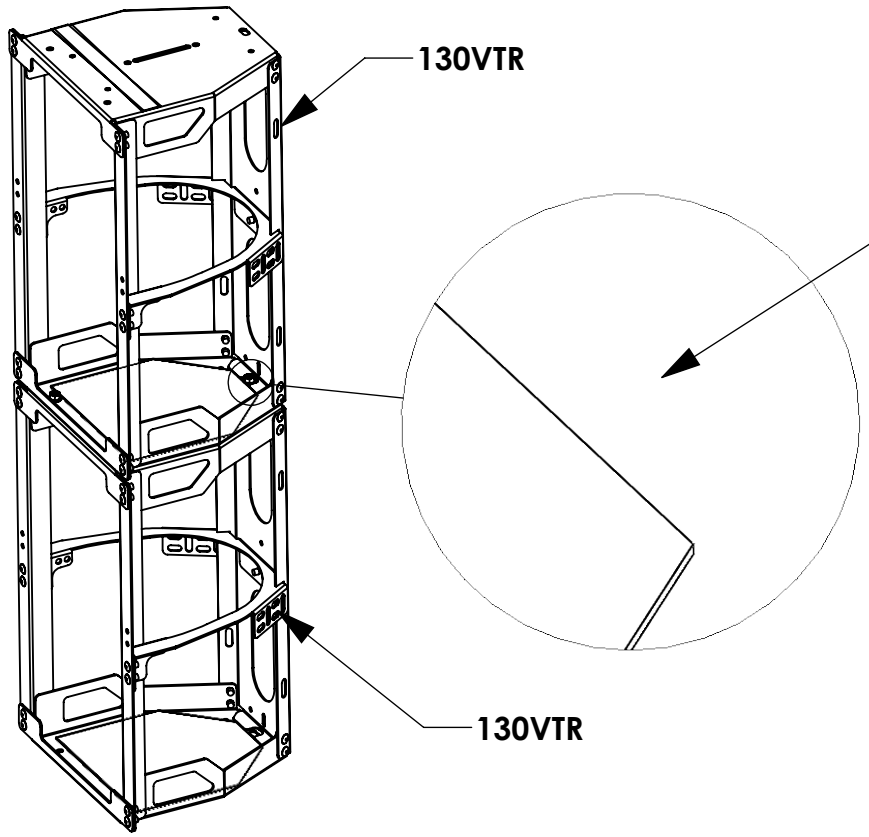

TO STACK VTR TANK RACKS USE FAS0440 AND FAS0438 TO EACH OTHER.

X3

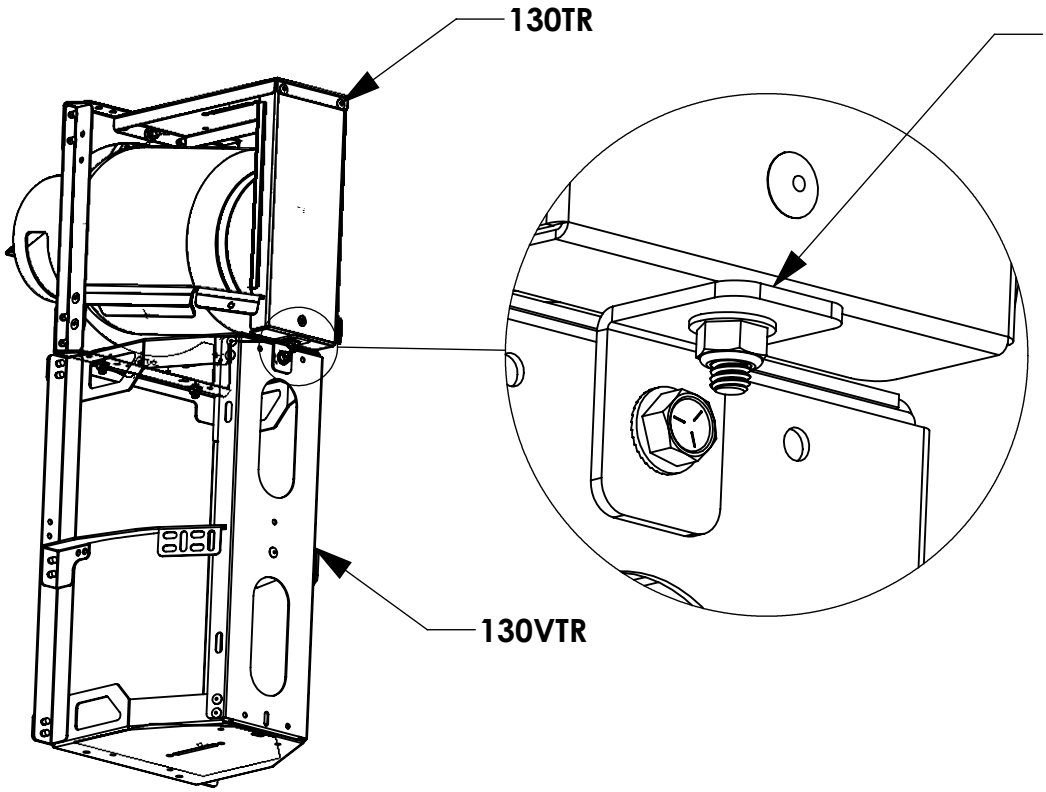

WHEN STACKING TR TANK RACKS ON TOP OF VTR RACKS USE MB118 BRACKET TO MOUNT TO THE VTR RACKS ALONG WITH FAS0440 AND FAS0438