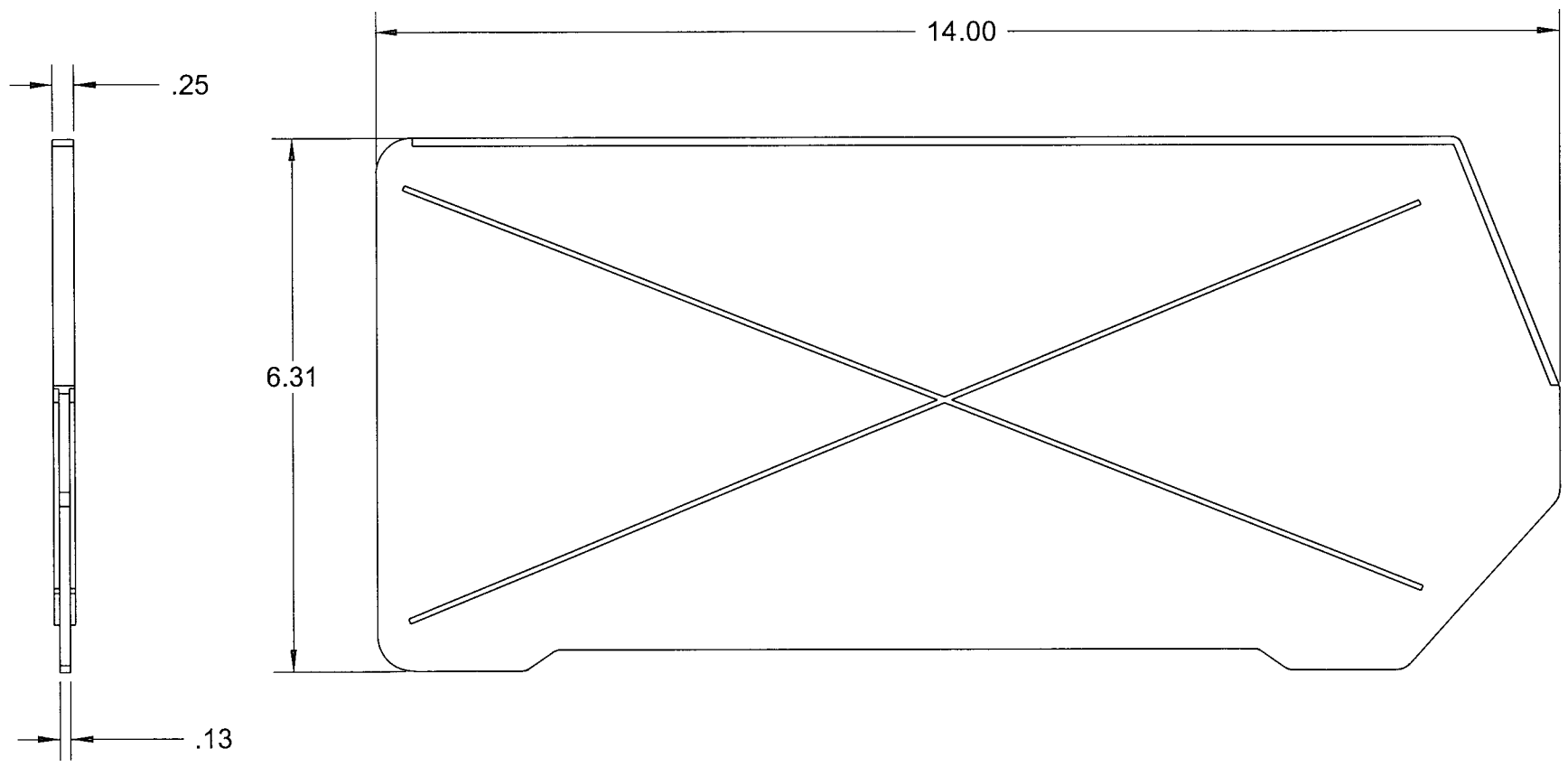

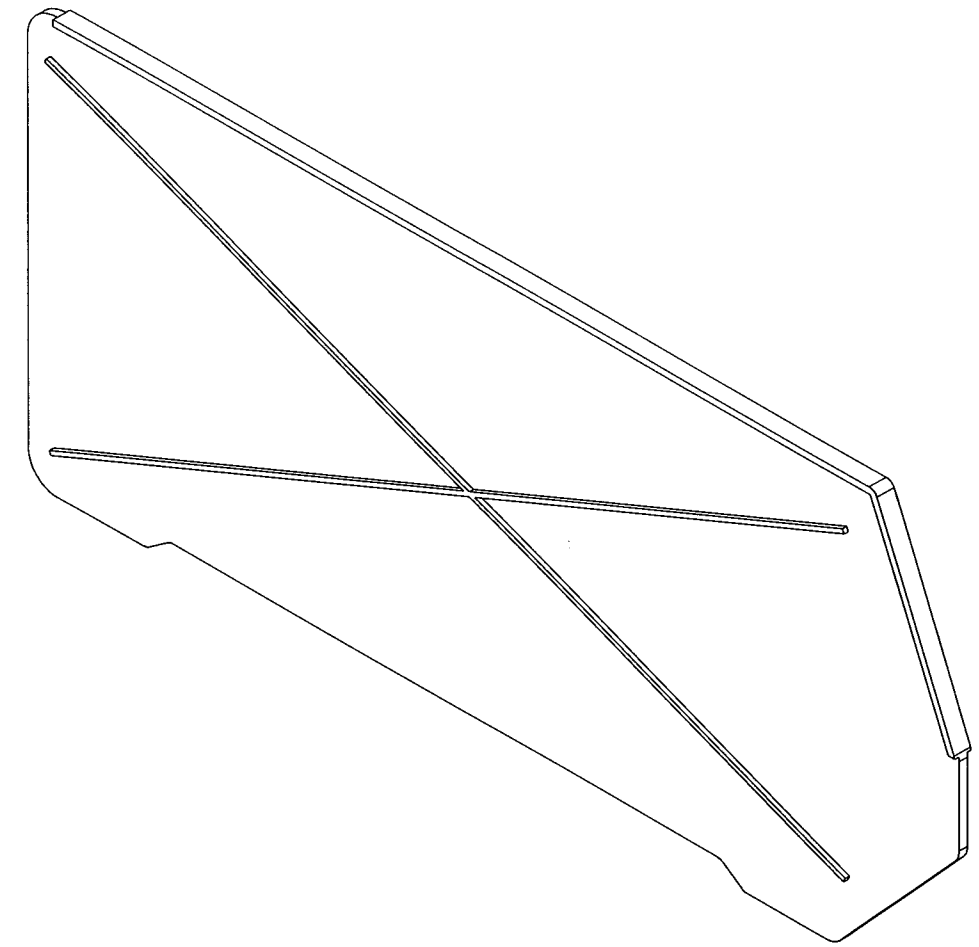

REVISION LEVEL: B

Part Number: 23

PRODUCTION RELEASED!

Initial Release: ECN-06071	Current Revision: ECN-11499		
Designer Approval:	Date: 11/20/08	Publisher Approval:	Date:

Description of change(s):

REVISE MATERIAL COLOR TO BLACK PLASTIC

UPDATE TITLE BLOCK

UNLESS OTHERWISE SPECIFIED
ALL BEND ANGLES
ARE 90 DEGREES
ALL DIMENSIONS ARE IN INCHES.

FEATURES	HOLES/SLOTS
0.0 = ± .125	0.0 = ± .062
0.00 = ± .062	0.00 = ± .031
0.000 = ± .031	0.000 = ± .0015

ANGLES
0° = ± 2°
0.0° = ± 1°

Material Thickness: per AISI Std.

PRINTED DOCUMENT IS UNCONTROLLED

Sheet 1 of 1

THIS DRAWING IS THE PROPERTY OF ADRIAN STEEL COMPANY AND IS NOT TO BE USED IN ANY MANNER DETRIMENTAL TO THE INTERESTS OF ADRIAN STEEL COMPANY

Designed By: BDS	Mat'l Type: BLACK PLASTIC	Raw Material Part Number PURCHASED PART	Coating/Finish: N/A	ADRIAN STEEL VAN AND PICKUP EQUIPMENT 906 James St. Adrian, MI 49221 517.265.6194
Date Designed: 9-11-2002	Material Yield: (Pcs.)		Paint Area (Sq. Ft.): N/A	
Do Not Scale Drawing!	Material Usage: (Lbs. Per Part)	Part Weight. (Lbs.):	Paint Wt. (Lbs.): N/A	

Part Description: 23 LINBIN DIV 30-176 15X7	Where Used: (LINBIN)	Segment Code:	Part Number: 23	REVISION LEVEL: B